TABLE OF CONTENTS
Part 11 - HIGHWAY LIGHTING

1100 GENERAL 11-9
- **1100-1 Introduction 11-9**
- **1100-2 Construction Projects 11-9**
- **1100-3 Force Account (ODOT Operations) Work 11-9**

1101 DISTRICT SYSTEM LIGHTING PLAN (DSLP) 11-11

1102 JURISDICTIONAL BOUNDARIES 11-11

1103 WARRANTS and GUIDELINES 11-13
- **1103-1 General 11-13**
- **1103-2 Warrants for Highway Lighting 11-13**
- **1103-3 Accident History 11-13**
- **1103-4 Land Use 11-13**
- **1103-5 Background Lighting 11-14**
- **1103-6 Special Locations 11-14**
  - 1103-6.1 General 11-14
  - 1103-6.2 Intersections 11-15
  - 1103-6.3 Pedestrian Walkways 11-15
  - 1103-6.4 Weigh Stations 11-15
  - 1103-6.5 Park and Ride Facilities 11-15
  - 1103-6.6 Bicycle Facilities 11-15
  - 1103-6.7 School Zones / Crossings 11-16
  - 1103-6.8 Sign Lighting 11-16
  - 1103-6.9 Underpasses 11-16
  - 1103-6.10 Long, High Bridges 11-16
  - 1103-6.11 Rest Areas 11-16
  - 1103-6.12 Miscellaneous Lighting 11-17

1104 CONSISTENCY OF TREATMENT 11-19
- **1104-1 General 11-19**
- **1104-2 System Consistency 11-19**
- **1104-3 Fixture Consistency 11-19**

1105 LEVELS OF LIGHTING 11-21
- **1105-1 General 11-21**
- **1105-2 Continuous Freeway Lighting (CFL) 11-21**
- **1105-3 Complete Interchange Lighting (CIL) 11-21**
- **1105-4 Intermediate Interchange Lighting (IIL) 11-21**
- **1105-5 Partial Interchange Lighting (PIL) 11-21**

1106 LIGHTING CRITERIA 11-23
- **1106-1 General 11-23**
- **1106-2 ODOT Lighting Criteria 11-23**
  - 1106-2.1 General 11-23
  - 1106-2.2 Intensity 11-23
  - 1106-2.3 Uniformity 11-23

1106-3 Local Criteria 11-23

1107 GUIDELINES FOR REDUCTION/REMOVAL OF EXISTING LIGHTING 11-25
1107-1 General 11-25
1107-2 DSLP Evaluation 11-25
1107-3 Change in Land Use 11-25
1107-4 User Objections 11-25
1107-4.1 General 11-25
1107-4.2 Existing Complete Interchange Lighting 11-25
1107-4.3 Existing Partial Interchange Lighting 11-25

1120 LIGHTING MATERIALS AND HARDWARE 11-27
1120-1 General 11-27
1120-2 Patented or Proprietary Materials, Specifications or Processes 11-27
1120-3 Purchasing Materials for Installation and Use by Local Agencies 11-27
1120-4 Aesthetics 11-27
1120-5 Local Preferences 11-27
1120-6 Operating Voltage 11-27
1120-7 Ballasts 11-27

1130 PLANNING / PROGRAMMING 11-29
1130-1 General 11-29
1130-2 Programming of Projects 11-29
1130-3 Funding Considerations 11-29
1130-3.1 General 11-29
1130-3.2 New Installation 11-29
1130-3.3 Upgrade/Retro-fit 11-29
1130-3.4 Maintenance 11-29
1130-4 State Participation 11-30
1130-5 FAA Requirements 11-30
1130-6 Light Fixtures 11-30
1130-7 Maintenance Concerns 11-31
1130-8 Scope Preparation for Specific Projects 11-31

1140 DESIGN INFORMATION 11-33
1140-1 General 11-33
1140-2 General Theory 11-33
1140-3 Lighting Theory 11-33
1140-3.1 General 11-33
1140-3.2 Illuminance 11-34
1140-3.2.1 General 11-34
1140-3.2.2 Point-by-Point Analysis 11-35
1140-3.3 Luminance 11-36
1140-3.3.1 General 11-36
1140-3.3.2 Small Target Visibility (STV) 11-36
1140-3.4 Headlamps 11-36
1140-3.5 Middle Third 11-37
1140-3.6 Illumination Criteria 11-37
1140-3.6.1 General 11-37
1140-3.6.2 Average Illumination 11-37
1140-3.6.3 Uniformity 11-37

1140-3.7 Critical Location 11-38
1140-4 Luminaires and Sources 11-38
1140-4.1 General 11-38
1140-4.2 Luminaire Placement 11-38
1140-4.3 Conventional 11-39
1140-4.3.1 General 11-39
1140-4.3.2 Mounting Height and Wattage 11-39
1140-4.3.3 Spacing 11-39
1140-4.3.4 Pole Location 11-40
1140-4.3.5 High Mast 11-41
1140-4.3.6 Low Mast 11-41
1140-4.3.7 Decorative 11-41
1140-4.4 Partial Lighting 11-41
1140-4.4.1 Interchange - General Information 11-41
1140-4.4.2 Diamond Interchanges 11-43
1140-4.4.3 Partial Cloverleaf and Cloverleaf Interchanges . . . 11-43
1140-4.4.4 Intersection 11-44
1140-4.4.5 Combination Supports 11-44
1140-4.5 Full Lighting 11-45
1140-4.5.1 Interchange 11-45
1140-4.5.2 Street 11-45
1140-4.6 Specific Cases 11-46
1140-4.6.1 Exit and Entrance Gores 11-46
1140-4.6.2 Intersections 11-46
1140-4.6.3 Bridges over Highways 11-46
1140-4.6.4 Pedestrian Bridges 11-47
1140-4.6.5 Overhead Signs 11-47
1140-4.6.6 Street Trees 11-47
1140-4.6.7 Underpasses 11-47
1140-4.6.8 Tunnels 11-48
1140-4.6.9 Median Mounted 11-49
1140-4.7 Placement Adjustments 11-49
1140-5 Circuit Design 11-49
1140-5.1 General 11-49
1140-5.2 Voltage 11-49
1140-5.2.1 General 11-49
1140-5.2.2 Voltage Drop 11-49
1140-5.3 Control Center 11-50
1140-5.3.1 General 11-50
1140-5.3.2 Load 11-50
1140-5.3.3 Location 11-50
1140-5.4 Cable 11-50
1140-5.4.1 General 11-50
1140-5.4.2 Cable Size 11-50
1140-5.4.3 Cable Type 11-51
1140-5.4.4 Cable Applications 11-51
1140-5.5 Conduit 11-51
1140-5.5.1 Conduit Type 11-51
1140-5.5.2 Conduit Size 11-51
1140-5.5.3 Conduit Fill 11-51
1140-5.6 Splice Types 11-51
1140-5.6.1 Cable Splicing Kits 11-51
1140-5.6.2 Connector Kits 11-52
1140-5.7 Pull Box 11-52
1140-5.7.1 General 11-52

1140-5.7.2 Pull Box Types 11-52
1140-5.7.3 Placement 11-52
1140-5.8 Junction Box 11-53
1140-5.9 Trenching 11-53
1140-5.9.1 General 11-53
1140-5.9.2 Trench in Paved Areas - Jacking 11-53
1140-5.9.3 Trench in Paved Areas - Open Cut 11-53
1140-6 Foundations 11-53
1140-6.1 Foundation Types 11-53
1140-6.1.1 Conventional 11-53
1140-6.1.2 High Mast 11-54
1140-6.1.3 Low Mast 11-55
1140-6.1.4 Decorative 11-55
1140-6.2 Locations 11-56
1140-6.2.1 Conventional 11-56
1140-6.2.2 High Mast 11-56
1140-6.2.3 Low Mast 11-56
1140-6.2.4 Decorative 11-56
1140-7 Grounding 11-57
1140-7.1 Towers 11-57
1140-7.2 Conventional 11-57
1140-7.2.1 General 11-57
1140-7.2.2 Pilasters 11-57
1140-7.3 Bridges 11-57
1140-7.4 Fences 11-57
1140-8 Suggested Procedure for Light Tower Foundation Design 11-57

1141 PLAN PREPARATION / PRODUCTION 11-59
1141-1 General 11-59
1141-2 Coordination with Utilities 11-59
1141-3 Plan Composition 11-59
1141-3.1 General 11-59
1141-3.2 General Notes 11-60
1141-3.3 General Summary 11-60
1141-3.4 Sub-summaries 11-60
1141-3.5 Schematic Index 11-60
1141-3.6 Plan Sheets 11-60
1141-3.7 Special Details 11-62
1141-3.8 Circuit Maps 11-62
1141-3.9 Tower Cross Sections 11-62
1141-4 Submissions and Project Development Reviews 11-62
1141-4.1 General 11-62
1141-4.2 Project Development Process Stage 2 11-62
1141-4.3 Project Development Process Stage 3 11-63
1141-4.4 Submission of Final Tracings 11-64
1141-4.5 Review Checklists 11-64
1141-4.5.1 General 11-64
1141-4.5.2 Stage 2 Plans 11-64
1141-4.5.3 Stage 3 Plans 11-65

1142 PLAN NOTES 11-69
1142-1 General 11-69
1142-2 202, Luminaire Removed 11-69
1142-3 202, Luminaire Removed for Storage 11-69

1142-4 202, Luminaire Removed for Reuse 11-69
1142-5 202, Light Pole Removed 11-69
1142-6 202, Light Pole Removed for Storage 11-69
1142-7 202, Light Tower Removed for Storage 11-69
1142-8 202, Light Pole Foundation Removed 11-70
1142-9 202, Pull Box Removed 11-70
1142-10 625, Pull Box Cleaned 11-70
1142-11 625, Conduit Cleaned and Cables Removed 11-70
1142-12 202, Disconnect Existing Circuit, As Per Plan 11-71
1142-13 202, Power Service Removed, As Per Plan 11-71
1142-14 Luminaire, High Mast, As Per Plan 11-71
1142-15 Luminaire, Low Mast, As Per Plan 11-72
1142-16 625, Luminaire, Conventional, As Per Plan 11-72
1142-17 625, Luminaire, Post-top, As Per Plan 11-72
1142-18 625, Luminaire, Underpass, As Per Plan 11-73
1142-19 625, Luminaire, Installation Only, As Per Plan 11-73
1142-20 Lamps 11-73
1142-21 625, Re-erect Existing Light Pole, As Per Plan 11-73
1142-22 625, Re-erect Existing Light Tower, As Per Plan 11-74
1142-23 Light Pole Anchor Bolts, Misc.: Set for Pilaster Mounted Light Pole 11-74
1142-24 Light Tower Foundation, As Per Plan 11-74
1142-25 Light Pole Painting 11-74
1142-26 Underdrains for Pull Boxes 11-76
1142-27 625, Junction Boxes, As Per Plan 11-77
1142-28 Conduit Expansion and Deflection 11-77
1142-29 625, Power Service Refurbished, As Per Plan 11-77
1142-30 625, Power Service, As Per Plan 11-77
1142-31 Special, Power Service Fence 11-78
1142-32 625, High Voltage Test 11-78
1142-33 High Voltage Test Waived 11-78
1142-34 Padlocks and Keys 11-79
1142-35 Special, Maintain Existing Lighting 11-79

1143 SPECIFICATIONS 11-81

1150 CONSTRUCTION 11-83
1150-1 General 11-83
1150-2 Design Ambiguities, Plan Errors, Consultation with Designer 11-83
1150-3 Respect for the Contractor 11-83
1150-4 Pre-Construction Procedures 11-83
1150-5 Supplemental Documents 11-84
1150-5.1 General 11-84
1150-5.2 Certified Drawings 11-84
1150-2.2 TE-24 Material Certification 11-84
1150-5.4 Qualified Products List 11-85
1150-5.5 Visual Inspection 11-85
1150-6 Contractor Certifications 11-86
1150-7 Luminaires 11-86
1150-7.1 General 11-86
1150-7.2 Conventional Luminaire 11-86
1150-7.3 Side-Mount Roadway Luminaire 11-86
1150-7.4 High-Mast Luminaire 11-86
1150-7.5 Low-Mast Luminaire 11-87

1150-7.6 Underpass Luminaire 11-87
1150-7.6.1 General 11-87
1150-7.6.2 Wall Mount 11-87
1150-7.6.3 Pendant Mount 11-87
1150-7.6.4 Post Mount 11-87
1150-7.6.5 Ceiling Mount 11-87
1150-7.7 Post-Top Luminaire 11-87
1150-8 Lamps 11-87
1150-9 Supports 11-88
1150-9.1 Pre-Assembly Inspection of Poles 11-88
1150-9.1.1 General 11-88
1150-9.1.2 Inspection of Galvanizing on Poles 11-88
1150-9.1.3 Inspection of Welds on Poles 11-89
1150-9.2 Assembly of Supports 11-89
1150-9.3 Tower Assembly 11-90
1150-9.3.1 General 11-90
1150-9.3.2 Erecting Towers 11-90
1150-9.3.3 Plumbing Towers 11-90
1150-9.3.4 Lightning Protection System for Towers 11-90
1150-9.3.5 Tower Lowering Device 11-91
1150-9.3.6 Luminaire Tenon Locations 11-91
1150-9.3.7 Latch Mechanisms and Indicator Flags 11-91
1150-9.3.8 Luminaire Ring Leveling 11-91
1150-10 Foundations 11-91
1150-10.1 General 11-91
1150-10.2 Excavation 11-92
1150-10.3 Placement of Concrete 11-92
1150-11 Pull Boxes 11-93
1150-12 Junction Boxes 11-93
1150-13 Trench 11-93
1150-14 Conduit 11-93
1150-15 Duct-Cable 11-93
1150-16 Distribution Cable 11-94
1150-17 Pole Wiring 11-95
1150-18 Grounding 11-95
1150-18.1 Basic Principles 11-95
1150-18.2 Ground Rods 11-95
1150-18.3 Exothermic Welds 11-96
1150-18.4 Structure Grounding 11-96
1150-19 Connections 11-96
1150-19.1 General 11-96
1150-19.2 Connectors 11-96
1150-19.3 Connector Kits 11-96
1150-19.4 Cable Splicing Kits 11-97
1150-19.4.1 General 11-97
1150-19.4.2 Epoxy Splice Kits 11-97
1150-19.4.3 Heat Shrinkable Splice Kits 11-97
1150-19.5 Sizing Conductor to Device Terminal 11-97
1150-20 Power Service 11-97
1150-20.1 General 11-97
1150-20.2 Photocell 11-98
1150-20.3 Conduit 11-98
1150-20.4 Meter Housing 11-98
1150-20.5 Lighting Contactor 11-98
1150-20.6 Lightning Arrestor 11-98

1150-20.7 Grounding Wire 11-98
1150-21 Test Procedures 11-99
1150-21.1 General 11-99
1150-21.2 Ground Rod Test 11-99
1150-21.3 Cable Continuity Test 11-100
1150-21.4 Cable Insulation Test (Megger Test) 11-100
1150-21.5 High Voltage Test (Hypot Test) 11-101
1150-21.6 10-Day Performance Test 11-102
1150-21.7 Luminaire Lowering Device Test 11-102

1160 MAINTENANCE / OPERATIONS 11-105
1160-1 General 11-105
1160-2 Maintenance Process 11-105
1160-3 Determination of Responsibility 11-105
1160-4 Emergency Maintenance 11-105
1160-5 Reactive Maintenance 11-105
1160-6 Quarterly Inspection and Report 11-106
1160-7 Required Preventive Maintenance 11-106
1160-8 Recommended Preventive Maintenance 11-106
1160-9 Replacement Luminaires 11-107
1160-10 Failure Analysis 11-107
1160-11 Repairing Broken Conduit and Duct Cable 11-107
1160-11.1 General 11-107
1160-11.2 Repair Damaged Duct Cable 11-107
1160-11.3 Repair PVC Conduit 11-108
1160-11.4 Repair Rigid Conduit 11-108
1160-12 Troubleshooting Lamps 11-108
1160-12.1 General 11-108
1160-12.2 Lamp Will Not Start 11-108
1160-12.3 Short Lamp Life 11-109
1160-12.4 Flickering 11-109
1160-12.5 Blown Fuses 11-109
1160-12.6 Lamp Light Output Low 11-110
1160-12.7 Lamp Starts Slowly 11-110
1160-12.8 Blackened Arc Tube 11-110
1160-12.9 Abnormal Lamp Color Difference 11-111
1160-12.10 Whole Circuit Off 11-111
1160-13 Pole Replacement/Foundation Repair 11-111
1160-13.1 General 11-111
1160-13.2 Anchor Bolts Sheared 11-112
1160-13.3 Anchor Bolt Bent 11-112
1160-13.4 Cracked Concrete in Foundation 11-112
1160-13.5 Anchor Bolt Adapter Plates 11-112
1160-14 Bracket Arm Repairs 11-112

1170 OTHER CONSIDERATIONS 11-113

1180 RESEARCH 11-113

1195 REFERENCE RESOURCES 11-113

1196 FORMS INDEX (no forms at this time) 11-115

1197 TABLES INDEX 11-117
Table 1197-1. Suggested Data for the District System Lighting Plan 11-119
Table 1197-2. Codes for Use in the District System Lighting Plan 11-120
Table 1197-3. Warrants for Freeway and Interchange Lighting 11-121
Table 1197-4. Average Maintained Luminance Design Values 11-122
Table 1197-5. Nominal Mounting Height and Wattage 11-123
Table 1197-6. Typical Bracket Arm Lengths 11-123
Table 1197-7. Recommended Conduit Sizes 11-124
Table 1197-8. Lighting Load Table 11-124
Table 1197-9. Recommended Lateral Soil Pressures for Foundations 11-125
Table 1197-10. Foundation Embedment Nomograph 11-126
Table 1197-11. Allowable Lateral Soil Resistance 11-127
Table 1197-12. Highway Lighting Responsibilities 11-128

1198 FIGURES INDEX 11-129
Figure 1198-1. Roadway Lighting Fixture Distribution 11-131
Figure 1198-2. Effects of Full Cut-Off and Non Cut-Off Luminaires 11-132
Figure 1198-3. Typical Luminaire Placement Partial Interchange Lighting (PIL) 11-133
Figure 1198-4. Detail of Luminaire Placement for Class I Exit Terminal (PIL) 11-134
Figure 1198-5. Partial Lighting Applications to the Basic Diamond Interchange 11-135
Figure 1198-6. Partial Cloverleaf with Partial Lighting 11-136
Figure 1198-7. Intersection Lighting Examples 11-137
Figure 1198-8. Luminaire Mounting Arrangements 11-138
Figure 1198-9. Overpass Key Unit Locations 11-139
Figure 1198-10. Underpass Key Unit Locations 11-140
Figure 1198-11. Control Center Data Chart 11-141
Figure 1198-12. Voltage Drop Study 11-142

Part 11 - HIGHWAY LIGHTING

1100 GENERAL

1100-1 Introduction

This **TEM** chapter provides guidelines for use in developing standard, uniform lighting systems. ***Sections 1140 and 1141*** provide design and plan production information. Additional highway lighting design information is found in the HL series of traffic control **SCDs**, and as noted in ***Section 1143***, the related specifications are addressed in **CMS Item 625 and CMS 725**.

1100-2 Construction Projects

Section 140 addresses the general application of **ODOT** standards, specifications and standard construction drawings to construction projects and ***Section 1150*** will be used to provide additional construction related information specific to highway lighting.

1100-3 Force Account (ODOT Operations) Work

Districts performing force account lighting work must comply with the requirements in the **OMUTCD** and this Manual. It is recommended that the **Districts** follow the provisions in the applicable markings related **SCDs** and **CMS** sections as well. It should be recognized, however, that the information in the **CMS** and **SCDs** does not necessarily provide the only method to achieve a given objective.

Section 1160 addresses **ODOT** preventive maintenance guidelines and standards for highway lighting.

Intentionally blank.

1101 DISTRICT SYSTEM LIGHTING PLAN (DSLP)

Each **District** should develop and maintain a **District System Lighting Plan (DSLP)**. This is typically a GIS thematic map that uses a systematic approach to show both the **District's** existing and future highway lighting. The **DSLP** is intended to provide for a uniform system and to improve maintenance efficiency with regard to factors such as partial, complete, conventional, high-mast and composite/hybrid designs. It allows the **District** to set priorities for the allocation of available funding for roadway lighting projects, and should be used as a guide in making Light – Don't Light decisions.

The **DSLP** is composed of county maps merged into a district-wide map. The twelve **DSLPs** make up a **Statewide System Lighting Plan (SSLP)**. Through the use of the **DSLP** and **SSLP** a consistent systematic treatment can be insured. Each **DSLP** database should be updated a maximum of every five years.

GIS requires a database made up of the existing physical inventory records. Suggested data and codes that should be used in the **DSLP** are shown in ***Tables 1197-1 and 1197-2***, respectively.

There are a number of decisions to be made to create the **DSLP**. These decisions will involve not only the examination of each of the various intersections, interchanges and roadways in the highway system, with regard to the engineering merits of lighting that particular location, but they will also involve insuring equality of treatment of similar locations, prioritizing the planned changes, and forecasting the availability of resources.

1102 JURISDICTIONAL BOUNDARIES

Care should be exercised in defining the limits of highway lighting and individual circuits in regards to jurisdictional boundaries. Existing ownership and maintenance of various roadways and other facilities should be considered. Layout and extent of circuits will determine maintenance and power usage charge responsibilities.

These issues should be addressed through appropriate planning and design of the lighting system, and appropriate prearranged agreements with local jurisdictions.

Where lighting systems cross jurisdictional boundaries to serve a complete area, additional circuits and control centers should be utilized to cleanly separate the units between maintenance areas. This will simplify billing practices.

Where jurisdictional boundaries cross lighting systems, consideration should be given to assigning (by written agreements) maintenance responsibilities to one entity.

Intentionally blank.

1103 WARRANTS and GUIDELINES

1103-1 General

Lighting warrants are based on the need for highway lighting and the benefits derived from lighting. In justifying lighting, many factors should be considered, including traffic volume, speed, nighttime road use, night accident rate, road geometrics, general night visibility, economic benefits and future increase in capacity or changes in road use.

1103-2 Warrants for Highway Lighting

Warrants for freeway and interchange lighting are shown in ***Table 1197-3***. These are derived from the **AASHTO** publication titled **An Informational Guide for Roadway Lighting**. The ability to satisfy these warranting criteria does not, in itself, necessitate that lighting be installed. Warranting criteria determine location eligibility for lighting; however, there are numerous other factors which must be considered.

For each of the levels of highway lighting shown in ***Table 1197-3*** only one of the Cases need be achieved to meet warrants. However, consideration should be given to whether a location meets only one or all warranting conditions.

1103-3 Accident History

Several factors may contribute to an increase in night accidents, such as:

1. Lack of adequate visual information.

2. Glare from background lighting and headlights.

3. Problems with vehicle lighting.

4. Driver fatigue.

5. Increased use of alcohol and other drugs.

6. Declining visual capability, especially with older drivers.

There is little research on the impact that lighting has on reducing accidents. However, lighting can provide an increase in highway safety by impacting the above mentioned factors.

1103-4 Land Use

The area surrounding a proposed lighting facility must be taken into account when considering the different types and intensities of light needed for a lighting plan. **American National Standard Practice for Roadway Lighting (RP-8)** sponsored by the **Illuminating Engineering Society (IES)** defines three general categories for land use: commercial, intermediate and residential:

1. Commercial – Commercial areas tend to create a heavy area of background lighting. High-mast or low-mast towers are well suited to these type of areas. Towers will blend in more with the surrounding area and yet still light the roadway to the needed level.

   In ***Table 1197-4***, “commercial” refers to that portion of a municipality in a business development where ordinarily there are large numbers of pedestrians and a heavy demand for parking space during periods of peak traffic, or a sustained high pedestrian volume and a continuously heavy

demand for off-street parking space during business hours. This definition applies to densely developed business areas outside of, as well as those that are within, the central part of a municipality.

2. Intermediate – These areas have a blend of commercial or residential types of land use. Multi-family residential rental property owners are much like industrial and commercial property owners in that lighting, while at lower levels, is still needed for security. Therefore, they are usually not bothered by any light trespass from adjacent highway lighting units.

   Low-mast towers or conventional poles tend to work best in these areas. High-mast towers will work, but the designer must consider the impact they will cause to the residential area. Common complaints are heavy light trespass on non-roadway areas and perceived glare from the visible part of the light bulb or fixture (the part not under a metal shroud).

   In ***Table 1197-4***, "intermediate" refers to that portion of a municipality which is outside of a downtown area, but generally within the zone of influence of a business or industrial development, often characterized by a moderately heavy nighttime pedestrian traffic and somewhat lower parking turnover than is found in a commercial area. This definition includes densely developed apartment areas, hospitals, public libraries and neighborhood recreational centers.

3. Residential – Owners of single family residential property are more sensitive to light trespass from adjacent highway lighting units, especially if the owner occupies the property. The needs of the traveling public must be balanced with the concerns of the surrounding residents. Low-mast towers and conventional lighting offer the best solution for this type of area. Low-mast towers in conjunction with one or two luminaires will generally light the area within the highway right-of-way and have very little light trespass. They also do not tend to cause the classic light tunnel effect produced when using conventional lighting.

   At times, these residents are also concerned with the aesthetics of highway lighting units that stand above the surrounding area or have drop glass refractors. If high-mast lighting is proposed, it is recommended that a public meeting be held to generate local input.

   In ***Table 1197-4***, "residential" refers to a residential development, or a mixture of residential and commercial establishments, characterized by few pedestrians and a low parking demand or turnover at night. This definition includes areas with single family homes, townhouses, and/or small apartments. Regional parks, cemeteries and vacant lands are also included.

1103-5 Background Lighting

Background lighting has several effects on a lighting system that should be noted.

When the surrounding light is minimal, the transition from lighted sections to unlighted sections should be gradual. Sudden changes in lighting can cause a visual blind spot. The driver's eyes must be given sufficient time to adjust to the new lighting level.

In commercial areas where the surrounding light is more prevalent, lighting should be increased to more closely match the existing commercial lighting. This will help overcome the light trespass from the surrounding area.

1103-6 Special Locations

1103-6.1 General

There are a number of locations other than freeways and interchanges for which lighting may be considered. Specific warrants are not available for these other locations. Primary concerns are

typically related to safety issues. Quite often illumination levels for these locations will differ from standard freeway and interchange lighting.

1103-6.2 Intersections

Lighting may be provided at intersections to enhance safety and to improve visibility of the intersection and approaches.

Intersections with a high percentage of night accidents or a high volume of pedestrian traffic during the hours of darkness should be considered for lighting.

Intersections with sight distance limitations, unusual or complicated geometrics, channelization, skewed approaches, high volumes, unusual traffic patterns, turning roadways, protected turning lanes or driver recognition problems may benefit from illumination.

Lighting units should be combined with signal and sign supports wherever feasible to minimize clutter and obstacles within the intersection and approaches. When lighting is utilized at channelized intersections and at intersections on turning roadways, units should be placed to illuminate protected turning lanes, at radius points and at approaches to divided areas and traffic islands.

1103-6.3 Pedestrian Walkways

Walkway lighting may be considered for security and aesthetic reasons. Walkway lighting may also include landscape or decorative lighting. Lighting of walkways may significantly increase use during the hours of darkness. Lower voltages (120 volts), vandal-proofing and safety issues should be taken into consideration. For example, control centers should be securely padlocked, wiring and anchor bolts enclosed and sharp edges and corners should be eliminated.

1103-6.4 Weigh Stations

Lighting and levels of lighting provided at weigh stations should take into account the full range of activities and needs of the various agencies utilizing these facilities for enforcement. Besides weighing, various degrees of inspection may be conducted. Temporary storage of detained cargo may also require lighting for security reasons.

Exit and entrance ramps at these facilities should be provided with at least partial interchange lighting (as defined in ***Section 1105-5***). The weigh lane from intersection to intersection over the scale and the inspection and parking area behind the scale house should be lighted with the intensity and uniformity normally provided for continuous freeway lighting, with additional low-mounted floods provided for the reading of vehicle markings, observation of vehicle undercarriages and position on the scales from the operator's position within the scale house.

1103-6.5 Park and Ride Facilities

Park and ride lots present two lighting requirements. The first is for the mixing of vehicular and pedestrian movements. The other is for security if the lot remains open late (after the evening peak and before the morning peak). Lighting for these facilities should be divided into three areas: drive intersections with adjacent highways, the drives themselves and the parking areas.

1103-6.6 Bicycle Facilities

Bike paths are facilities which are independent of the roadway. They may double as pedestrian or recreational corridors. For these facilities, lighting is more of a security measure and decisions are made based on the amount of night use to be permitted or encouraged.

A bike lane is a dedicated lane provided contiguous to the lanes for motor vehicles, as part of a roadway. In this case, the visibility of the bicyclist and lane becomes more important. Lighting should be considered both: 1) to assist the motorist to detect and allow for the bicyclist; and 2) to assist the bicyclist in detecting and avoiding debris in the bike lane, and in compensating for or avoiding pavement irregularities.

1103-6.7 School Zones / Crossings

School Zone lighting may be considered where a significant pedestrian volume exists. Accident prevention should be considered if a significant volume of turning or stopping vehicles are in potential conflict with pedestrian movements.

Appropriate School Zone signing should be in place before lighting is installed. See ***Part 7*** for further information about School Zones.

1103-6.8 Sign Lighting

It is common practice to power the luminaires for sign lighting from the roadway lighting circuits. See ***Section 212*** for further information on sign lighting.

1103-6.9 Underpasses

Underpasses should be evaluated to determine if existing underpass illumination is adequate or needs to be supplemented. Artificial illumination is normally not needed for underpasses which are less than 75 feet (23 meters) in length. However, both skewed underpasses and parallel underpasses less than 40 feet (12 meters) apart may need underpass lighting regardless of their length. Each underpass should be evaluated on its own merits.

The evaluation of lighting intensity and uniformity for the underpass and adjacent highway should be made under both daytime and nighttime conditions. When the length of the structure limits the amount of light from natural daylight or adjacent luminaires located outside the structure, the need for lighting units should be evaluated. Factors to consider include lighting design criteria ***(see Section 1140)***, the extent, if any, that shadows are produced, and the extent, if any, that lighting intensity and uniformity are compromised. The limited adaptability of older drivers to changes in illumination should also be a factor in determining the need for lighting.

Determination of the need for lighting units for new construction should be made on the basis of design criteria as well as direct comparisons with existing underpasses.

Additional guidance can be found in the **Illuminating Engineering Society's Recommended Practice (RP-222).**

1103-6.10 Long, High Bridges

Bridges have a tendency to freeze before the roadway and typically do not have the clear zone recovery areas of adjacent pavement. Roadways on bridges of such height and length that the normal highway background reference is lost against the sky or water can benefit from highway lighting even though the adjacent roadway is unlit.

1103-6.11 Rest Areas

Rest areas have a considerable mixing of both vehicle-to-vehicle and vehicle-to-pedestrian traffic. Therefore, parking lots and sidewalks between parking areas and service buildings should be lighted for night use. The "green space" surrounding the parking areas and service buildings

should have security lighting for the protection of motorists and for deterrence of unauthorized or criminal use.

Rest areas which are characterized by high exit speeds from the roadway, served by long ramps from the exit to the parking areas, and/or with considerable truck parking along the ramps should have fully lighted ramps. These types of conditions are commonly found at rest areas along freeways, but may be found on other highways. Higher exit speeds and the presence of large trucks parking along the ramps, legally or otherwise, create the need for special care in the placement of the poles and luminaries. The poles should have sufficient offset from the ramp pavement to prevent pole knockdowns by tractor-trailers attempting to parallel park. Luminaries should extend over the ramp pavement to eliminate shadows from parked trucks which would obscure ramp pavement and pedestrians walking along the ramp.

Rest areas which are characterized by lower exit speeds, served by driveways or shorter ramps, and without truck parking, should normally not require lighted driveways. These types of conditions are commonly found at rest areas located on highways other than freeways. Lighting should be provided at the intersections of the driveway and the highway. Lighting should be considered when the driveways are of extreme length or large truck parking occurs along the driveway.

1103-6.12 Miscellaneous Lighting

There are other unique applications where lighting may be considered which are not detailed by this Manual, such as for landscaping or for architectural and aesthetic considerations.

Intentionally blank.

1104 CONSISTENCY OF TREATMENT

1104-1 General

Lighting warrants and guidelines are discussed in general in ***Section 1103*** and the warrants for freeways and interchanges are specifically addressed in ***Table 1197-3***. The purpose of warrants is to justify lighting at a particular location. The decision to actually install lighting, and to what extent, is dependent on many other factors, such as, **District** priorities, project cost and participation, available funding, public input, and economic benefits and public safety. It is also desirable to be consistent in treating similar situations in a similar manner. This desire for consistency makes the **DSLP** approach described in ***Section 1101*** particularly helpful.

1104-2 System Consistency

The **District System Lighting Plan (DSLP)** and **Statewide System Lighting Plan (SSLP)** described in ***Section 1101*** should be used to promote and insure a consistent and systematic treatment. The **DSLP** graphically displays lighting information, and allows those familiar with the locations in the area covered by the map to easily find the disparities between similar locations and to determine the action required to mitigate any disparities.

1104-3 Fixture Consistency

In all areas where **ODOT** is responsible for the operation and maintenance costs (whether directly or by reimbursement agreement) of highway lighting, the standard design should be based upon a High Pressure Sodium (HPS) light source employed at the highest practical mounting height consistent with the geometry and land use of the area being lighted.

In other areas, such as along service roads or city streets, where a local jurisdiction will be responsible for operations and maintenance costs, they may request use of other light sources to maintain consistency with existing street lighting systems. However, in view of the emphasis on energy conservation, extensive use of light sources other than HPS should be discouraged ***(see Section 1130-5)***.

Intentionally blank.

1105 LEVELS OF LIGHTING

1105-1 General

For purposes of discussion, various levels of lighting service have been identified and are described in the following sections. General warrants and guidelines for highway lighting are discussed in ***Section 1103.*** The warrants for freeway and interchange lighting are shown in ***Table 1197-3***.

1105-2 Continuous Freeway Lighting (CFL)

This type of lighting is the installation of fixed light sources along a section of freeway to provide uniform illumination along its length. This type of lighting is more desirable in urban areas where development exists and traffic speed changes occur due to diverging and merging lanes. Continuous freeway lighting should be designed to provide initial horizontal illumination levels as prescribed in ***Section 1106.***

1105-3 Complete Interchange Lighting (CIL)

This type of lighting is used to provide uniform lighting throughout an interchange, including all points of the diverging and merging traffic lanes, turn lanes and mainlines within the interchange. Interchange lighting should be designed to provide initial horizontal illumination levels as prescribed in ***Section 1106***.

1105-4 Intermediate Interchange Lighting (IIL)

Intermediate interchange lighting is a design in which the initial lighting units to be installed are considered to be the preliminary stage of a complete lighting system. Intermediate interchange lighting should be considered in urban, and occasionally rural, areas where complete interchange lighting is not yet warranted under ***Table 1197-3.*** This type of lighting should be utilized if there is reasonable probability that complete interchange lighting (CIL) will eventually be warranted based on the land use guidelines in ***Table 1197-3***. Consequently, lighting designed under this procedure should complement eventual complete interchange lighting. Thus, the lighting layout for each interchange under this scenario should include the future proposed light locations.

1105-5 Partial Interchange Lighting (PIL)

Partial interchange lighting differs from complete and intermediate interchange lighting in that later stages of more fully developed lighting are not anticipated during the expected life of the initial system. Partial lighting will generally occur in rural areas, and occasionally urban areas. Lighting provided under this concept will generally be limited to diverging lanes, merging lanes and ramp intersections. Lighting intensity and uniformity under ***Section 1106-2*** will not be satisfied.

Intentionally blank.

1106 LIGHTING CRITERIA

1106-1 General

The following sections reflect design values for illuminance levels. There may be conditions under which somewhat different levels are desired or necessary. The lighting designer should use all available pertinent information in reaching a decision regarding the level to be used for any specific street or highway.

There are many locations where very high levels of illuminance are provided for streets in the central business district. The reason is usually a commercial consideration directed towards making the downtown business area more appealing to shoppers. Generally, levels considerably higher than those shown in ***Table 1197-4*** (which is based on **AASHTO** criteria) must be justified on some basis other than solely for the safe and efficient flow of traffic.

1106-2 ODOT Lighting Criteria

1106-2.1 General

The following criteria should be used for **ODOT** highway lighting projects. However, since projects may be developed for special purposes, and since **FHWA** reserves the right of approval on an individual project basis, the designer should coordinate proposed criteria with the **Office of Traffic Engineering** early in the development of planning for highway lighting.

1106-2.2 Intensity

The initial average intensity for lighting **ODOT**-maintained freeways shall be 1.0 to 1.2 footcandles, and all lighting design should attempt to approximate the 1.2 value without exceeding it, except where this limitation results in an unacceptable uniformity ratio as specified in ***Section 1106-2.3***. For non-freeway lighting, reference should be made to ***Table 1197-4*** for recommended average maintained horizontal illumination levels.

1106-2.3 Uniformity

The design uniformity ratio for interchange lighting or for continuous freeway lighting shall be between 3:1 and 4:1. However, where partial or intermediate interchange lighting is being designed, it is obvious that the desired uniformity cannot be obtained until all initially-omitted lighting units are installed in accordance with a complete interchange lighting plan based upon the stated design ratios.

The 3:1 ratio of uniformity is acceptable in all cases, and the 4:1 ratio should not be exceeded. Tower lighting is typically in the range of 2:1 to 3:1.

1106-3 Local Criteria

Various jurisdictions may have different criteria from what is listed in this Manual. The local jurisdiction must provide **ODOT** with the approved policy, ordinance or established standard and obtain approvals prior to the beginning of the design of the project.

Intentionally blank.

1107 GUIDELINES FOR REDUCTION/REMOVAL OF EXISTING LIGHTING

1107-1 General

Where an existing highway lighting system is no longer warranted or cost effective, it should be considered for either a reduction in the lighting level or removal of the lighting. Where light levels are reduced, they should not be reduced below the criteria for partial interchange lighting.

After the decision has been made to remove or reduce the lighting system, the appropriate lights should be turned off but left in place for a period of one to four years. For all highway lighting systems, an accident analysis study will be required during this time period to determine the effects of the reduced lighting.

1107-2 DSLP Evaluation

If an existing lighting system is not cited in the **DSLP** as a location that should be lit, or is lit to a greater extent then what the **DSLP** recommends, the location should be studied. If the guidelines recommend partial or no lighting, the lighting should be reduced to the level specified in the **DSLP**.

1107-3 Change in Land Use

At an interchange, where a major traffic generator has permanently closed or other significant highway or land use changes have occured, the existing interchange lighting should be studied for meeting the lighting guidelines. If the guidelines are not met, the lighting system should be reduced or removed as specified in the **DSLP**.

1107-4 User Objections

1107-4.1 General

If a substantial percentage of residents and local business owners are objecting to the lighting, verification shall be made that the lighting guidelines are still met and that the lighting coincides with the **DSLP**.

1107-4.2 Existing Complete Interchange Lighting

If the warrants for complete interchange lighting ***(Table 1197-3)*** are met and the **DSLP** recommends complete interchange lighting in this area, other methods should be investigated for reducing the lighting impact outside of the right-of-way (i.e., glare shields). If the guidelines for partial interchange lighting are met or the **DSLP** recommends it, the location should be reduced to partial interchange lighting.

1107-4.3 Existing Partial Interchange Lighting

If the warrants for partial interchange lighting ***(Table 1197-3)*** are met and the **DSLP** recommends lighting, other methods should be investigated for reducing the lighting impact outside of the right-of-way (i.e., glare shields). If the warrants are not met, or the **DSLP** does not recommend lighting in this area, the lighting should be removed.

Intentionally blank.

1120 LIGHTING MATERIALS AND HARDWARE

1120-1 General

There are several different types of hardware available for highway lighting. All new **ODOT** owned and maintained lighting systems should be three-wire grounded design. Also, highway facilities that are **ODOT**-maintained should utilize the standard lighting hardware of high-mast, low-mast or conventional poles.

1120-2 Patented or Proprietary Materials, Specifications or Processes

The use of patented or proprietary materials, specifications or processes is discussed in **Section 1220-3**.

1120-3 Purchasing Materials for Installation and Use by Local Agencies

To help encourage uniformity and provide a method whereby local agencies can buy traffic control materials and equipment using federal funds, ***Sections 1220-4 and 1220-5*** describe processes that have been established whereby local agencies can purchase such items through **ODOT**.

1120-4 Aesthetics

The area that is to be lighted should be considered when a lighting project is initiated. If a project will only effect a small portion of an existing lighting system, (i.e., one or two poles) the same brand of hardware and luminaire should be specified in the plan. If a project will effect a larger portion of an existing lighting circuit (i.e., one or more circuits), the designer should evaluate the situation, and with the agreement of the maintaining agency, require either that: 1. The contractor use the same brand of hardware and luminaire as the existing lighting system; or 2. The contractor replace the entire existing system with a different brand of hardware and/or luminaire. This will prevent a lighted area from having different lighting patterns resulting from the use of different brands of luminaires and also prevent a lighted area from having different styles of poles.

1120-5 Local Preferences

Many **Cities** and **Villages** have created streetscapes in their downtown areas and desire that the lighting systems installed follow the pattern established. The streetscape designs typically require a type of decorative or historical pole to be used. During the programming of the project, the **City** or **Village** must provide **ODOT** with their official policy that identifies the streets that are to have the decorative lighting installed and obtain approvals before design proceeds.

1120-6 Operating Voltage

In 600 volt class circuits, the line to line voltage may not exceed 600 volts and the line to ground voltage may not exceed 300 volts. Industry standard voltages are, therefore, 120 , 208 and 277 volts line to ground and 240 and 480 volts line to line. Highway lighting power drops from the utility company are generally single phase, thus the practical operating voltages are limited to 120 or 240 volts line to ground and 240 or 480 volts line to line.

1120-7 Ballasts

Where ballasts are to be wired line to line (three-wire system), ballasts having an isolated primary winding must be used. Where ballasts are to be wired line to ground (two-wire system), auto-transformer ballasts may be used. When the use of other than conventional (i.e., ovate or cobra head) or high-mast or low-mast luminaires is contemplated and the luminaire is to be wired line to line, the

vendors should be contacted and ask to confirm in writing that the luminaires under consideration are available with a ballast having an isolated primary winding.

1130 PLANNING / PROGRAMMING

1130-1 General

The following sections are provided to assist planners and designers in developing standard uniform lighting systems. These sections discuss various aspects of lighting that should be taken into account when planning new, or rehabilitating existing, lighting systems. The following are guidelines and are not meant to override a planner's engineering judgment.

1130-2 Programming of Projects

Before a lighting project is programmed, whether alone or in conjunction with a roadway project, a preliminary study should be completed. A preliminary study should include the following: Verifying that the project meets lighting warrants where available and is in conformance with the **DSLP** ***(Sections 1101 and 1103)***; verifying what types of funding will be used ***(Section 1130-3)***; deciding what type of lighting is to be used ***(Section 1120)***; verifying who will maintain the system ***(Section 1102)***; and deciding what type of power supply is to be used ***(Section 1120-6)***. For temporary lighting see ***Part 6***.

1130-3 Funding Considerations

1130-3.1 General

The programming should specify all funding types used on the project. Federal funding for highway lighting is governed by **FHWA** policy. In general, highway lighting is eligible for Federal participation when warrants and criteria satisfy **AASHTO** and **ANSI** requirements ***(see Section 1106)*** and the project is on a Federal-aid highway system. There may also be occasional special programs involving Federal aid which require approval from offices other than the **Ohio Division Office of FHWA**. Under such circumstances, it is essential that requests for participation be initiated at the programming stage. State participation in lighting projects shall be as specified in ***Section 1130-4***.

1130-3.2 New Installation

If the proposed lighting system is in more than one funding jurisdiction, all agencies must agree in writing on their portion to be paid. An example is: If an interchange that is to be lighted is within the boundaries of two incorporated areas, the funding would typically follow the corporation boundaries. If only a small portion of an interchange is in an incorporated area, an attempt should be made in the design of the lighting to avoid placing any material or equipment within this area.

1130-3.3 Upgrade/Retro-fit

If the existing lighting system is in more than one maintenance jurisdiction, all agencies must agree in writing on their portion to be paid. Any changes in corporation limits from the original installation should be reflected in the funding split of the project and in the new maintenance agreement. It should also be remembered that lighting circuits do not necessarily stop at the project limits and therefore the project's lighting needs may be greater than expected if only the area inside the project limits is considered.

1130-3.4 Maintenance

If the existing lighting system is in more than one maintenance jurisdiction, each jurisdiction should have independent circuits that do not trespass into other jurisdictions. Each jurisdiction should

have a separate control center. The maintenance agreements should be initiated in the planning stages.

1130-4 State Participation

ODOT participation in highway lighting projects shall be as follows:

1. On limited-access highways and freeways, the **ODOT** will participate in the cost of all lighting system items that are necessary to complete the lighting system. **ODOT** participation will be limited to the cost of a system to provide an average initial intensity in the range of 1.0 to 1.2 foot candles. If a system to provide higher intensities is provided at the insistence of any political subdivision, the added cost of construction and maintenance resulting therefrom shall be borne by that political subdivision.

2. Existing lighting systems on crossroads and streets which cross limited-access highways and freeways without interchange facilities will be rearranged and/or replaced with similar styles and types of systems and equipment to provide a light intensity equal to that provided by the existing system. However, if the rearrangement of the existing road or street creates a need for a greater intensity for the safety of the traveling public, or requires changes in types and styles of system and equipment, modifications to the extent necessary to meet such need and requirements may be included subject to approval by the **Assistant Deputy Director of the Development Design Administration**.

3. On major improvements of existing highways within municipal corporations, existing lighting systems will be rearranged or replaced, if necessary, to restore light intensities to those previously existing, and in any event, to provide not less than the minimum average maintained intensity as recommended by **AASHTO** for expressways and highways, and as established by **ANSI** for urban streets.

4. **ODOT** participation in the eligible costs of such construction, rearrangement, and replacement will be the same as **ODOT** participation in the other construction costs of the project.

5. The **ODOT** will not participate in the cost of extensions and betterments to existing publicly-owned lighting systems included in the **ODOT** construction contract at the request of a municipality or other political subdivision.

1130-5 FAA Requirements

The programmer shall verify the location of the project in relation to all airports or helipads. If the project is within a 20,000 feet (6 kilometers) radius of a public-use or military airport or heliport, the programmer shall perform an Airway/Highway Clearance Analysis to determine if **FAA** notification is required **(see L&D Manual Volume Three, Section 1403.13)**.

1130-6 Light Fixtures

As noted in ***Section 1104-3***, the standard design for highway lighting on **ODOT**-maintained facilities should be based on High Pressure Sodium (HPS) fixtures.

Where a municipality desires to maintain aesthetic consistency for existing street lighting systems by using distinctive unit designs or by painting light poles, specific justification for such designs shall be submitted for **ODOT** approval before Federal funds are authorized. In general, such justification must demonstrate that the municipality is not requesting Federal funding for designs which exceed the **City** standard, and that the distinctive design is used consistently through a reasonably large or historical area within the **City**.

1130-7 Maintenance Concerns

Prior to the programming of the lighting project, the programmer should verify that the **City** or **Village** will be able to maintain the lighting. Typically small **Cities** and **Villages** have lighting provided for and maintained by the local power company. Prior to the programming of a project to replace the existing utility-maintained lighting with **City** or **Village**-maintained lighting, **ODOT** should verify that the **City** or **Village** is capable of maintaining the proposed lighting or that they are willing to contract out the maintenance of the proposed lighting.

1130-8 Scope Preparation for Specific Projects

For each intersection, interchange and roadway affected by the project, the highway lighting should be described as it is to be upon the completion of the project. It should be stated whether the new lighting is to be part of the project or provided by others in conjunction with the project, including a statement that there is to no lighting at the particular intersection or interchange, or on the roadway section if that is the case.

Intentionally blank.

1140 DESIGN INFORMATION

1140-1 General

Section 140 provides general background regarding design information for **ODOT** projects, including the three-stage review process typically used for traffic control plans. Additional information about lighting design has been provided in this Part.

This section provides the designer with information to satisfy the requirements of **ODOT** relative to highway lighting construction plans. It is not intended to substitute for nationally-accepted criteria and standards nor to relieve the designer of the responsibility for using personal skills and ingenuity in developing the best possible plan for a specific project. Rather, it is intended to supplement more formal design references and knowledge by explaining policies, criteria, design considerations and plan procedures which experience has indicated are pertinent to the state highway system.

1140-2 General Theory

To properly understand the effects of roadway lighting, one must have a basic understanding of the theory of lighting and the design of roadway lighting. The following sections will outline some basic theory and design principles followed by plan preparation elements. Those wishing to gain a fuller understanding of lighting theory should consult the **Illuminating Engineering Society (IES) of North America's American National Standard Practice for Roadway Lighting ANSI/IES RP-8**.

1140-3 Lighting Theory

1140-3.1 General

The act of seeing involves three separate elements: the eye, the visual task and light. Light emitted by a source strikes an object, the object reflects some of the light toward the eye, and the object is seen. Except when light sources themselves are being observed, seeing is by reflected light. Light which enters the eye directly from the source is of no value in the effort to see an object; in fact, it will actually impair vision.

At the low levels of illumination involved in highway lighting, objects are often seen by silhouette rather than by light reflected from the object itself. In this case, the primary concern is surrounding or background brightness, rather than illumination or brightness of the object. For maximum effectiveness, discernment by silhouette depends upon the degree of brightness difference, or contrast between the object and its background.

In highway lighting, as contrasted with interior lighting, the objects to be perceived are relatively large, and visual acuity, or the ability to distinguish fine detail is not involved as a general rule. The most important objective is to create or enhance the brightness contrast between an object and its background, or the roadway surface itself. In all highway lighting, objects are made visible by a combination of two or more methods of discernment. For example, on a well-lighted highway:

1. Distance objects are seen by direct silhouette.

2. Projections above the pavement (the upper portions of pedestrians and vehicles) usually are seen by reverse silhouette.

3. Traffic signs and very close objects are seen by surface detail.

4. Many objects produce glint or highlights on irregular or specular surfaces.

The same light that produces visibility on the highway also produces a negative result known as glare. Glare is any brightness in the field of view that causes discomfort, annoyance, eye fatigue or interference with vision. It may best be described as negative light or light out of place. Glare is a function of intrinsic brilliancy, candlepower toward the eye, distance, contrast, and angular displacement with the line of sight.

Roadway luminaires are classified by the way they transmit and distribute light. The use of various types of reflectors and refractors permits the lighting designer to produce an efficient and aesthetic design. Luminaire classifications are defined in terms of vertical light distribution, lateral light distribution, and the control of distribution above maximum candlepower, known as cutoff. Vertical and lateral light distributions apply primarily to the shape of the roadway area to be illuminated. Both of these distributions can be important when determining the amount of light trespass from a source. ***Figure 1198-1*** illustrates five basic distributions of highway lighting fixtures.

The control of the distribution above the maximum candlepower, known as the cutoff, is important for determining the amount of glare emitted by a fixture. A non-cutoff roadway fixture typically has a dropped lens (a refractor). This allows the light to be more easily distributed from the fixture and permits the illumination design to be less precise; however, it produces more undesirable glare. A full cut-off fixture typically has the dropped refractor replaced with a flat glass, while the reflecting elements inside the fixture have been redesigned to provide control of the light output. This provides much better glare control; however, the illumination design must be much more precise to maintain lighting uniformity. ***Figure 1198-2*** illustrates the effect of non-cutoff and full cut-off luminaires.

The **Illuminating Engineering Society (IES)** is the recognized authority for the setting of various illumination recommendations, including those for roadway lighting. These standards, as listed in **ANSI/IES, RP-8**, have been well researched and established as the minimum requirements for the safety of roadways. Several studies have been undertaken in recent years involving test targets placed on roadways. The **IES** standards have been confirmed during these studies as the minimum requirements for proper illumination with respect to stopping sight distances. To give some idea of the scale of illuminance required for various roadways refer to ***Table 1197-4***.

1140-3.2 Illuminance

1140-3.2.1 General

Illuminance (or illumination level) is defined as the amount of light being transmitted upon a certain area. The SI unit for illuminance is the lux, which is equal to one lumen per square meter. The English unit for illuminance is the footcandle, which is equal to one lumen per square foot. Illuminance is governed by the inverse square law. The illuminance of an area or object diminishes as the square of the distance.

Highway lighting is generally designed as the illuminance of the area in question. It is based on the premise that, by providing a given level of illumination and a uniformity of distribution, satisfactory visibility can be achieved. The basic calculation for roadway illuminance is as follows:

$$E_{ave} = \frac{(L \times CU \times LLF)}{S \times W}$$

where:

E_{ave} = average illuminance of the area in horizontal footcandles (lux)

L = luminous flux of the source in lumens

CU = coefficient of utilization of the luminaire (obtained from a photometric data chart supplied by the manufacturer and dependent on the width of the road and the mounting height)

LLF = light loss factor (the amount of light that will be lost over time due to dirt accumulation on the luminaire and lamp depreciation - typically 0.7 to 0.8)

S = spacing of the streetlight poles

W = width of pavement to be illuminated

For example, a roadway with a pavement width of 33 feet (10 meters) and a light pole spacing of 164 feet (50 meters) utilizing a luminaire which has an output of 25,000 lumens, a coefficient of utilization of 45 percent, and a light loss factor of 70 percent will have an average illuminance of:

$$I = \frac{(25000 \times 0.45 \times 0.7)}{164 \times 33} = 1.46 \text{ footcandles } (15.75 \text{ lux})$$

1140-3.2.2 Point-by-Point Analysis

Point-by-point calculations are used to determine the illuminance at a specific location from a “point” source of light. This assumes the source behaves as a point source; consequently, this method cannot be used for linear and area sources. This computational process utilizes a candlepower distribution curve. The inverse square law is used to determine from the values on the distribution curve the levels of illumination at various points on the interchange or area to be lighted.

The illumination in horizontal footcandles at a grid point resulting from one high mast assembly can be computed by using the formula:

$$E_h = \frac{cp \cos\theta}{d^2}$$

where:

E_h = illumination at the point in horizontal footcandles

cp = candlepower at angle θ

θ = the angle from the vertical axis through the system to the point in question

d = the distance from the light source to the point in questions in feet

Then the total illumination at each of the grid points is the sum of the contributions of illumination from the high-mast assemblies within an effective range of the point in question.

Because of the time involved with hand calculations in the point-by-point method, and due to the number of trials which may be required, the point-by-point method is usually accomplished by computer. Generally, computer programs are built around the point-by-point method. Manufacturers have these type programs available and will normally provide design layouts.

1140-3.3 Luminance

1140-3.3.1 General

Luminance is the brightness of an object that has been illuminated by a source. The luminance of an object depends on its material characteristics and reflectance. For example, under the same illuminance conditions a dark object will look less bright than a light object. Since luminance refers to the amount of light reflected back by an object, this object in effect acts as a new source. There is a direct relationship between the luminance of a viewed object and the resulting illuminance of the image on the retina of the eye. The unit of luminance is the footcandle (candela per square meter).

Highway lighting may also be designed by calculating the luminance of the roadway surface. This involves determining the reflective properties of the pavement, which can vary dramatically depending if the surface is concrete or asphalt. Although considered superior to the illuminance method, the luminance method is complex and because it involves reflective properties of the pavement, is subject to change over time due to aging of the pavement as well as change associated with weather.

1140-3.3.2 Small Target Visibility (STV)

The visibility of an object is that property which makes it discernable from its surroundings and depends on a combination of the following factors: (1) the difference in luminance between the object and its immediate background (contrast); (2) the angular size of the object at the eye of the observer; (3) the luminance adaptation level to which the eye is exposed; and (4) the duration of the observation. The object that is used for STV is a 7 x 7 inch target. The observer is located on a line parallel to the centerline of the roadway at a distance of 273 feet (83 meters). Using the four measurements stated above and a series of equations, the visibility level (VL) of the target can be calculated. Visibility models must also incorporate age-related changes in visual processing efficiency that have notable effects on target visibility.

STV is included in the **IES Recommended Practice (RP) 8**, as one of three methods for demonstrating compliance. Until further study and development of computer programs to more definitively analyze the various factors affecting the visibility level (VL) of the target, **ODOT** continues support of the illuminance method.

1140-3.4 Headlamps

If we drive in an “empty” road situation (i.e., just one car on the roadway), a proper level of STV is all that is required. High beam headlights produce a very low level of pavement luminance at 200 to 300 feet (60 to 90 meters) ahead, yet we can drive quite safely with them as long as we are the only car on the road. The same light that produces visibility on the highway, also produces a negative result known as glare.

In the driving task the most commonly experienced glare is probably that from approaching headlamps on an unlighted highway. Here the effect is one of shock; the eye has been adapted to relatively low brightness and suddenly is confronted with an extremely bright source, often close to the normal line of sight. The effect may be sufficiently severe to contract the iris, which further reduces the ability to see. The same headlamp fails to glare when encountered in the daytime, although its candlepower is the same day and night. The glare effect is due to excessive brightness contrast, because of the dark surroundings at night.

When the roadway is not “empty,” a reasonably high level of pavement luminance is essential to reduce the adverse effect of glare from the headlights of oncoming vehicles. An adequate level of STV can be achieved with fixed lighting, which also provides much higher level of pavement

luminance than do headlights alone.

1140-3.5 Middle Third

The preferred location for overhead sign supports is in the middle third of the design spacing for the lighting units. When the desired location criteria for a sign support does not result in its falling within the preferred area, the following minimum separation between overhead sign installations and lighting units should be maintained:

Mounting Height for Lighting Unit (Feet)	Minimum Separation (Feet)
32.5	40
40	60
50	90

If the lighting unit or the sign support locations cannot be adjusted to maintain the above minimum separation, the lighting unit may be placed immediately in advance of the sign support when a 40- or 50-foot mounting height is used for lighting. However, such a position cannot be used effectively for a 32.5-foot mounting height, and consideration should be given to raising such mounting heights for several units in the general vicinity of the sign support.

1140-3.6 Illumination Criteria

1140-3.6.1 General

In designing a new highway lighting system, the quantity and quality of illumination must first be established.

1140-3.6.2 Average Illumination

The quantity of illumination is that average illumination level which has been established through experience in the lighting profession that represent economic and practical restraints. The quantity of light is referred to as the “average maintained horizontal illumination” and is a function of the classification of the roadway and the area which is served by the lighting system. Breaking this term into its parts, the first term, “average,” refers to the method of measuring the illumination level, and means that this is a mean value of all points within the area being lighted. The second term, “maintained,” refers to the illumination value at some point in time after the system is installed. Maintained illumination takes into account reductions in luminous output due to factors such as lamp lumen depreciation (LLD factor) and luminaire dirt depreciation (LDD factor). Thus, a lighting system begins within an initial illumination level and depreciates to some level less than this. For this reason, the initial design level of illumination is higher than the maintained value. The final term, “horizontal,” refers to the surface on which the illumination is measured, in this case, a horizontal plane, such as the roadway surface.

Average maintained illumination levels currently recommended by the **IES** for various areas and facilities are shown in ***Table 1197-4***.

1140-3.6.3 Uniformity

The illumination concept of lighting design defines an average quantity of illumination over the pavement surface. This average quantity of illumination can, however, be accomplished by

either producing a generally uniform level of illumination over the area or by producing relatively high and low areas of illumination. The latter is not desirable. As a driver passes through areas of relatively high and low illumination levels, his eyes must adapt.

The uniformity of illumination is considered a qualitative means of defining highway lighting. The term used to quantitatively describe uniformity is the uniformity ratio. As the name implies, it is a ratio of various illumination values. Current practice makes use of the Average Level-to-Minimum Point method (average-to-minimum ratio) of calculating uniformity, in which the average illumination is divided by the lowest illumination point encountered within the traveled portion of the roadway. For example, a street with an average illumination level of 2.0 footcandles (22 lux) and a minimum point of 0.5 footcandle (5 lux) would have an average/minimum uniformity ratio of 4:1. Current **ODOT** criteria requires 3:1 or better for high speeds and high conflict areas, and 4:1 for low speeds and low conflict.

The Maximum-to-Minimum Point method uses the maximum and minimum values within the traveled portion of the roadway. It is felt that the use of a maximum/minimum uniformity ratio more accurately portrays the degree of uniformity, because it takes into account the full effects of the differences of illumination on the lighted roadway. Current **ODOT** criteria requires a 10:1 or better max/min uniformity ratio.

1140-3.7 Critical Location

Roadways have many areas where the problems of vision and maneuvering of vehicles are complex and require lighting units at critical locations. These locations are in addition to what are commonly called key unit locations at intersections, acceleration and deceleration lanes, underpasses, overpasses, pedestrian bridges and on structures. Key and critical unit locations must be identified for each project prior to developing a traditional (non-high mast) layout where light poles are relatively close to the traveled way. These locations are the basis for the ultimate design with additional units filling in the gaps. See ***Sections 1140-4.4 and 1140-4.6*** for specific information.

1140-4 Luminaires and Sources

1140-4.1 General

The design of a highway lighting system involves consideration of visibility, economics, aesthetics, safety and environmental conditions, as well as appropriate material and equipment. The first major step in the design process involves the selection of tentative luminaires and light sources and the selection of one or more tentative lighting system geometric arrangements (conventional or high mast), including mounting heights and lateral luminaire positions, that may provide an acceptable design based on the required uniformity criteria (i.e., average maintained footcandles, ave/min uniformity ratio and max/min uniformity ratio).

1140-4.2 Luminaire Placement

On freeways or expressways, through lanes normally should be lighted with luminaires having **IES** Type III medium semi-cutoff distribution as discussed in the **American National Standard Practice for Roadway Lighting**, published by **ANSI**. Ramps or directional roadways having two lanes or less should have **IES** Type II medium semi-cutoff distribution luminaires. The Type II distribution should generally be used where the pavement width is less than 1.25 times the mounting height. For wider pavements, the Type III distribution should be used.

The light source for **ODOT**-maintained lighting systems should be high pressure sodium lamps.

High-mast lighting, or light towers, have frequent applications, especially in interchange areas and

along major freeways. In **Ohio**, lighting units are considered to be high masted, or towers, when the height of the luminaires is 70 feet (20 meters) or more above the supporting foundation. The more obvious advantages of towers over conventional lighting units are as follows:

1. Because of their increased height and number of luminaires (up to six luminaires per tower), illumination distribution is improved to the extent that a single tower will usually replace from four to eight conventional lighting units. While the increased height of luminaires in itself does not necessarily guarantee lower disability glare, careful system design with towers can result in reducing glare and increasing comfort as the installation is approached and driven through. In general, greater uniformity of illumination can be achieved by a well-designed tower system.

2. Towers are significantly safer than conventional lighting units from the viewpoints of the road user and the maintenance forces. Since towers are located as far as practicable from traveled pavement, the opportunities for impact by errant vehicles is greatly reduced. Maintenance vehicles, equipment and personnel are remote from traffic lanes during servicing operations, which eliminates the need for temporary traffic control devices and allows complete concentration on maintenance activities, without fear of interference or distraction from moving vehicles. Since **ODOT** specifications require that towers be equipped with luminaire lowering devices, the most common maintenance operations are performed at ground level.

3. Daytime aesthetics are improved because of the fewer numbers of poles and their greater distance from the roadway.

CMS Item 725.21 discusses detailed requirements for light towers, and the designer should be familiar with that specification when evaluating proposals relative to tower lighting.

1140-4.3 Conventional

1140-4.3.1 General

ODOT projects scoped for lighting will generally specify whether conventional or high mast units are to be used in the design. Currently, conventional units refer to a “cobra head” roadway fixture mounted on round tapered poles at a mounting height of nominally 30 to 50 feet (9 to 15 meters). The units are widely used, readily available and economically attractive.

1140-4.3.2 Mounting Height and Wattage

The standard mounting height and luminaire rating combinations used by **ODOT** can be found in ***Table 1197-5***.

The designer should always check with the maintaining agency for mounting height and luminaire rating preferences due to replacement stock standardization.

The designer should also note that the mounting height and the support height (as defined in the **SCD HL series**) may differ, depending on the pole base type required and affects the Item Description/Light Pole Design Number used in the construction plan Lighting General Summary.

1140-4.3.3 Spacing

In designing a lighting system, maximizing spacing of luminaires consistent with good illumination design should be emphasized. From the standpoint of economy and safety, the minimum number of luminaires and supports should be used while satisfying the illumination quantity and quality criteria. Spacing of lighting units will be influenced by mounting heights,

lamp sizes, luminaire arrangements, uniformity ratios, illumination levels (footcandles), and special roadway features such as variable pavement widths, sign supports, bridges and other structures, intersection, ramps and utility locations.

Luminaire spacing is calculated by using the following equation:

$$\text{Luminaire Spacing} = \frac{LL \times CU \times LLD \times LDD}{E_h \times W}$$

where:

LL = Initial lamp lumens

CU = Coefficient of utilization

LLD = Lamp lumen depreciation factor

LDD = Luminaire dirt depreciation factor

E_h = Average maintained level of illumination, footcandle (lux)

W = Width of lighted roadway, feet (meters)

As this formula is usable in both the English and metric systems of measure, either units can be used. The resultant luminaire spacing will, of course, be obtained in units corresponding to the system units used.

In general, luminaires should be located along the right in the direction of travel.

On undivided highways and streets, the use of one-sided arrangements should be limited to pavement having overall widths of less than 1.25 times the mounting height.

1140-4.3.4 Pole Location

1140-4.3.4.1 Lateral Placement

Along uncurbed sections of roadway, the normal location of conventional light poles is 6.5 feet (2 meters) behind the face of guardrail. Where guardrail is not provided, the normal offset distance of the pole from the edge of pavement should be the same as if guardrail were provided, and frangible bases should be used in accordance with the latest **AASHTO** safety requirements.

In curbed areas, the normal location of conventional light poles is 2.5 feet (0.8 meter) behind face of curb (2 feet (0.6 meter) minimum clear), but no closer than adjacent utility poles near the curb.

For improved safety, where the typical section of the roadway will allow a greater setback than normal, poles may be located farther from the pavement edge, consistent with available bracket arm lengths.

1140-4.3.4.2 Bracket Arm Length

Currently, conventional light poles are available with extended bracket arm lengths of 18, 20, 25 and 30 feet. These are in addition to the standard lengths of 4, 6, 8, 10, 12 and 15 feet. Poles with increased arm lengths should not be used intermittently except in unusual circumstances, such as may occur in a flare guardrail area in which the guardrail is not

readily adjustable to accommodate the lighting units. In general, increased setbacks should not be used for less than 5 or 6 pole spacings, in the interest of consistency.

The bracket arm length should normally be no less than the pole offset; however, in certain situations such as on the inside of a sharp curve (i.e., on a loop ramp), better distribution will result from setting the light source slightly inside the vertical projection of the pavement edge. The actual bracket arm length and pole offset from the pavement should be established after a careful review of the pavement geometry.

Typical bracket arm lengths for given pole offsets from the edge of pavement can be found in ***Table 1197-6***.

1140-4.3.5 High Mast

ODOT projects scoped for high-mast lighting generally utilize 400 watt high pressure sodium fixtures mounted on 70-foot or higher poles. Fixtures may be symmetric (**IES** Type V), asymmetric (**IES** Type II or III), or asymmetric “long and narrow” (**IES** Type I). Each high-mast pole supports two to six luminaires in a symmetrical arrangement. See **CMS 725.21** for additional information on luminaires for light towers.

1140-4.3.6 Low Mast

An **ODOT** project utilizing a low-mast lighting system is made up of 50-foot poles supporting single 400 watt high pressure sodium fixtures. The fixture is generally symmetric (Type V) and is supported by a Style III or “shepherd’s crook” pole **(see SCD HL-10.11)** which is barrier-mounted between opposing lanes of traffic. This method is ideal for lighting sections of freeway with three to five lanes of traffic in each direction without the daytime “visual clutter” of twin-arm conventional units or the nighttime light trespass to areas adjacent to the roadway resulting from high-mast units.

1140-4.3.7 Decorative

Occasionally a project will require the use of decorative poles and fixtures in order to maintain or establish the aesthetics of an area, such as replacement of a bridge in an area already utilizing fluted post-top units, or lighting the pedestrian/picnic areas of a rest area or Welcome Center.

Since most projects requiring decorative poles will be in an urban (i.e., curbed) area, the minimum offset to maintain 2 feet (0.6 meters) minimum lateral clearance from curb face will apply, with consideration given to overhead and underground utilities. Decorative post-top pole placement in the pedestrian/picnic area of a rest area varies with the individual layout, but an offset of 5 feet (1.5 meters) from the edge of the sidewalk is often used.

1140-4.4 Partial Lighting

1140-4.4.1 Interchange - General Information

Partial lighting is the process of lighting only the parts of the interchange that are considered most critical to the night driver. Partial interchange lighting implies that later stages of more fully developed lighting are not anticipated during the expected life of the initial system. Partial interchange lighting will generally apply in rural areas, and occasionally in suburban areas, to the lighting of interchanges on otherwise unlighted freeways for which ADT traffic satisfies warrants under Case PIL-1 or Case PIL-2. Lighting provided under this concept will generally be limited to diverging lanes, merging lanes and ramp intersections as described in the following section.

The following information is intended to provide guidance in determining the number and locations of lighting units for partial interchange lighting. The procedures outlined are generally applicable under the conditions stated; however, it does not necessarily follow that lighting at a given level will automatically be approved simply because conditions satisfy the warrants.

The typical luminaire arrangement for partial interchange lighting as shown in ***Figure 1198-3*** should be used in the following situations.

1. All diverging roadways, including exit ramps, ramp divergences, directional roadways, etc., should be lighted, particularly in the gore point areas. Normally, four units will suffice for partial lighting; however, when the taper is shorter than the normal unit spacing, the unit at the beginning of the taper may be omitted.

2. All converging roadways, including ramp acceleration lanes, ramp convergences, directional roadways and C-D roads, should be lighted. Normally, three units will suffice for partial lighting; however, the number of units may be adjusted in proportion to the taper length when it varies substantially from the standard 1200-foot ramp entrance length.

3. Combined accel-decel lanes (weaving lanes) should be lighted as combinations of the above two treatments. The seven units normally used may be adjusted to a fewer number depending on the length of the lane.

4. All ramp intersections with crossroads and all crossroad intersections within the general interchange area should be lighted in accordance with typical arrangements shown in ***Figure 1198-3***.

In general, key unit locations for ramps are controlled by their speed change lanes and/or their intersections with side roads. However, overpasses and underpasses are not uncommon on ramps, and it will be necessary to adjust unit spacing in such cases to accommodate the various structure related items ***(see Section 1140-4.6)***. On partially lighted interchanges, the ramp proper is usually left unlighted for the initial installation; however, where loop ramps are involved, such as on cloverleaf or parclo-type interchanges, full loop ramp lighting should be provided.

The first unit on an exit ramp is normally placed 195 feet (60 meters) from the key unit on the deceleration lane. This normal spacing should be adjusted downward to provide a uniform spacing for the ramp units ahead. On curving ramps of short radius, for luminaires mounted on the inside of the curve, the spacing should be 0.55 times the normal straight line spacing; and for luminaires on the outside of the curve, the spacing should be 0.70 times the normal straight line spacing.

Where ramp merges with the mainline are gradual and space between the mainline and ramp pavements is limited, or where a narrow median not feasible for the location of lighting units is used to separate a collector-distributor road from a nominal two-lane directional roadway, the mainline must be lighted from units mounted along the right of the ramp (in the direction of travel) or C-D road. Under such circumstances, the ramp units should be at least of the same type, size and mounting height as the normal mainline units. Spacing for such units should be based upon a theoretical pavement width which includes the space between the merging pavements, i.e., the total width from the left edge of the mainline pavement to the right edge of the ramp or C-D road pavement.

Key unit locations for acceleration lanes or merging pavements should be at the point of the convergence of the right edge of mainline traveled pavement and the left edge of the subordinate traveled pavement (oriented in the direction of travel).

At deceleration lanes or diverging pavements, the key unit location should be 40 feet (12 meters) in advance of the transverse joint which ends the gore area traveled pavement.

Key unit locations for combined accel-decel lanes and for relatively short auxiliary lanes should be treated at each end in accordance with the above, and reference should be made above for lighting the mainline pavement from the right of the added lane.

When calculating lighting unit spacing along tapers or variable width pavement, the pavement width at the key location (as located in the above discussion) should be used to determine the spacing for the succeeding, or second, location. The spacing from the second to the third unit should be determined from the pavement width at the second unit position. The spacing from the third to the fourth unit should be determined from the pavement width at the third position, and so on, until the pavement width and the spacing become uniform.

The following procedures should be followed in establishing key unit locations and subsequent spacing for partial interchange lighting.

1. Normally, the key unit location at the entrance nose for a ramp or merging lane will be installed in the future ***(see Figure 1198-3)***. The unit spacing to the second unit (or first unit to be installed initially) should be computed on the basis of the pavement width at the entrance nose. The spacing calculations should then be continued, as discussed previously in this section, proceeding toward the end of the acceleration taper, and alternating the initial and future units until the desired unit locations for the initial installations have been satisfied. If the entrance nose occurs on or immediately adjacent to a bridge, the nose unit should be installed initially, and the alternating of future and initial units as shown in ***Figure 1198-3*** should be reversed (i.e., units labeled “F” should be installed initially, and vice versa).

2. For exit ramps or diverging lanes, the key unit should be installed initially at a point 40 feet (12 meters) in advance of the gore point as shown in ***Figure 1198-4***. From this key unit location, spacing calculations should be continued toward the beginning of the exit taper, using the pavement width at the key location to determine the spacing to the second (future/full) location. Using the pavement width at that location as a basis for spacing to the next unit (future/full) location, the process should be repeated as necessary as previously discussed for tapered areas. The unit within the tapered area nearest the beginning of the taper should be installed initially, as shown in ***Figure 1198-4***. Reference should also be made to ***Figure 1198-4*** for location of the first mainline unit beyond the exit gore and for spacing along the ramp proper.

3. Lighting units at ramp intersections should be installed with the initial lighting project ***(see Section 1140-4.6.3)***.

4. Unit locations for future/full lighting on interchange separation structures or other major structures within the interchange area should be determined as discussed in **Section 1140-4.6**, and grounding, conduit, pilasters, etc., for these units should be provided with the initial bridge construction to facilitate the future addition of bridge lighting.

1140-4.4.2 Diamond Interchanges

An illustration of partial lighting applications to a basic diamond interchange is shown in ***Figure 1198-5***.

1140-4.4.3 Partial Cloverleaf and Cloverleaf Interchanges

A common rural interchange is the partial cloverleaf shown in ***Figure 1198-6***. In addition to

the merge-diverge areas, critical points include the sharp curves in the off-ramps and the intersections with the highway. For the intersections to work safely they should be designed properly with channelization to discourage/prohibit wrong movements, adequate signing to reaffirm the design, and lighting to give the driver the ability to see the geometry of the intersection.

Full cloverleaf interchanges generally do not involve partial lighting. Most of this type of interchange is composed of critical areas including merge-diverge areas and sharp curves which should be fully lit.

1140-4.4.4 Intersection

Partial lighting will alert the driver to an approaching intersection. In general, all lighting units for intersections may be considered key units. Severely skewed intersections, or those having more than four approaches, will require special consideration to assure that the apron areas and traffic control devices are discernable at night and that appropriate lateral clearances are available in the interest of safety. Unit locations for the more common intersection types are as follows:

1. On two-lane road intersections, including T intersections, use two units - one to the right (in the direction of travel of the higher-volume road) and 40 feet (12 meters) beyond the far edge of the intersecting pavement, or at the point of curvature (PC) of the far radius return of the intersecting pavement; and the other in a similar manner for the opposite direction of travel. These locations may require adjustment if the normal design spacing is exceeded (for a continuously lighted roadway) or if the light pole is to be used in combination as a support for traffic control devices.

2. Intersections on four-lane roads will generally require four units - one in each quadrant to the right (in the direction of travel) at the PC or 40 feet (12 meters) beyond the intersection, whichever is greater (the “intersection” is considered to be the theoretical point where the projected edges of the two pavement edges in a given quadrant would intersect).

3. At channelized intersections or where turning roadways are involved, such as at ramp intersections with multiple-lane side roads, lighting units should be located so as to illuminate protected turning lanes, approaches to divided areas or traffic islands, and at radius points as discussed above. A typical example for such conditions is shown on Sketch D of ***Figure 1198-7***. Key unit locations in such situations may be similar to those discussed for merging and diverging pavement gores in **Section 1140-4.4.1.**

Using a single light source at an intersection is generally undesirable because it may create a “brightness barrier.” This “brightness barrier” is the same problem we experience when we attempt to see beyond the headlights of an oncoming vehicle. Multiple light sources at an intersection increase the lighted area and reduce the need to see beyond until the driver is inside the lighted area looking out.

1140-4.4.5 Combination Supports

In the interest of reducing costs and the number of support poles in intersection areas, light poles and traffic signal or overhead sign supports are often combined when practical. This practice is encouraged to minimize the clutter effect of numerous supports which could hamper sight distance and increase the opportunity for vehicle impact with obstacles.

The designer should always check with the maintaining agency of the traffic signals prior to combining signal/light poles. This is especially important if the lighting system is 480 volts.

Many agencies do not desire signal maintenance crews working with live high voltage lighting cables in the signal poles, pull boxes and conduits. In this event, the designer should attempt to maintain at least 10 feet (3 meters) separation between signal and lighting supports for aesthetic reasons, if possible. If combination signal/light poles are to be used, the signal and lighting designer(s) should carefully locate the supports so as to satisfy traffic and lighting needs, such as pedestrian push button and signal indication locations, vehicular signal locations, mast arm length, luminaire location and bracket arm length.

1140-4.5 Full Lighting

1140-4.5.1 Interchange

On simpler interchanges, it is assumed that the driver will be able to visualize the layout of the interchange by viewing the critical points. When interchanges become more complicated such that the driver will need to be able to see the ramps, turning roadways, and the various elements of the interchange to get the visual picture, it may be necessary to light the entire interchange. This is known simply as complete or full interchange lighting. Full interchange lighting is generally associated with freeways and expressways where the mainline is lighted; however, it can be used in rural or suburban locations where there is a need to light the interchange, but not necessarily a need to light the mainline. In such instances, the need usually arises from the complex nature of the interchange.

With conventional lighting, luminaires are located at regular spacings along the ramps and turning roadways of the interchange. High-mast lighting is often used, especially at large or complex interchanges for the economic, safety and aesthetic reasons mentioned in **Section 1140-4.2**. High-mast unit locations vary with every interchange due to the geometrics; however, along the on- and off-ramps, they are generally located on the outside (driver's right side) of the ramp. At interchange intersection areas, the high-mast units are usually best located inside the interchange.

The latest interchange configuration, the Single Point Urban Interchange (SPUI), generally utilizes full interchange lighting due to the extremely wide intersection area with the crossing arterial and the unfamiliar geometrics involved. High-mast units are ideal for this application.

1140-4.5.2 Street

Instead of partial lighting along a street (i.e., intersection lighting, as discussed in **Section 1140-4.4.4**), continuous or full street lighting may be required for a project. First, the pole arrangement and spacing must be determined based on the street width and illumination level, as discussed in **Section 1140-4.3.3** The "one-side," "staggered" and "opposite" arrangements ***(Figure 1198-8)*** are used when it is impossible or inadvisable to use a median-mounted configuration. The choice among the three options depends mainly on the width of the facility to be lighted. The "one-side" arrangement is for: narrow, one-way streets; two-way, two-or three-lane streets; and other situations where the street is no wider than one to one and a half times the mounting height of the luminaire. The "staggered" arrangement is for streets of medium width (one and a half to two times the mounting heights). The "opposite" arrangement is used for streets which are extremely wide and where medians are too wide to effectively accommodate median lighting. In this latter case, the arrangement is actually two independent "one-side" arrangements.

Once the arrangement and spacing have been determined, the critical or key units at the intersections are chosen as shown in **Section 1140-4.4.4.** Finally, the pole locations between intersections are determined based on the arrangement and calculated spacing, with minor spacing adjustments as needed.

1140-4.6 Specific Cases

1140-4.6.1 Exit and Entrance Gores

See ***Section 1140-4.4.1*** for information about lighting exit and entrance gore areas.

1140-4.6.2 Intersections

In general, all lighting units for intersections may be considered key units. In the interest of reducing costs and the number of support poles in intersection areas, light poles, traffic signal, or overhead sign supports, are often combined when practical. This practice is encouraged to minimize the clutter effect of numerous supports which could hamper sight distance and increase the opportunity for vehicle impact with obstacles. Severely skewed intersections, or those having more than four approaches, will require special consideration to assure that the apron areas and traffic control devices are discernible at night and that appropriate lateral clearances are available in the interest of safety. Unit locations for the more common intersection types are as follows:

1. Two-Lane Road – On two-lane road intersections, including T intersections, use a minimum of two units:

   a. One to the right in the direction of travel on the higher-volume or through roadway, and 40 feet (12 meters) beyond the far edge of the intersecting pavement, or at the PC (point of curvature) of the far radius return of the intersecting pavement, and

   b. The other unit is placed in a similar manner for the opposite direction of travel.

   These locations may require adjustment if the normal design spacing is exceeded (for a continuously lighted roadway) or if the light pole is to be used in combination with a support for traffic control devices.

2. Four-Lane Road – Intersections on four-lane roads will generally require four units:

   One in each quadrant to the right in the direction of travel at the PC (point of curvature), or 40 feet (12 meters) beyond the intersection, whichever is greater. The "intersection" is considered to be the theoretical point where the projected edges of the two pavement edges in a given quadrant would intersect.

3. Channelized Intersections – At channelized intersections or where turning roadways are involved, such as at ramp intersections with multiple-lane side roads, lighting units should be located so as to illuminate protected turning lanes, approaches to divided areas or traffic islands, and at radius points as discussed above. Key unit locations in such situations may be for merging and diverging pavement gores.

Also see **Section 1140-4.4.4** for information about highway lighting at intersections.

1140-4.6.3 Bridges over Highways

Light poles on overpasses should be located as near to piers as possible to reduce pole vibration, and midway between construction joints where feasible. If abnormal pole vibration is anticipated, consideration should be given to the use of special pole mountings such as pier cap extensions or other structural modifications; or special padding material may be desirable between the pole base and pilaster support to dampen the effect of vibration.

Lighting units should not be installed within approach slab areas, nor within 10 feet (3 meters)

of approach slabs. When the length of the bridge and approach slabs, plus the 20 feet (6 meters) for approach slab clearance, results in a length less than the design spacing for the lighting, the lighting units should be located uniformly at each end of the structure. If a staggered arrangement is being used, the units should be located at the far end of the structure on the right in the direction of travel.

When the length of the bridge and approach slabs, plus the 20 feet (6 meters) for approach slab clearance, results in a length greater than the design spacing, the first lighting unit associated with the structure must be located at least 10 feet (3 meters) in advance of the beginning of the approach slab. Subsequent units should follow design spacing across the bridge. See ***Figure 1198-9*** for overpass key unit locations.

1140-4.6.4 Pedestrian Bridges

Generally, all pedestrian bridges should be lighted. Since approaches to pedestrian bridges are not always accessible to maintenance vehicles, and since pedestrian bridge lighting is highly susceptible to vandalism, special consideration should be given to the location and protection of this type of lighting design.

1140-4.6.5 Overhead Signs

See **Section 1140-3.5** for information about lighting overhead signs.

1140-4.6.6 Street Trees

Since many projects involve modifying the typical section of an urban or suburban roadway and include the replacement or addition of street lighting and street trees, coordination in the placement of the light poles and street trees is essential. The location and spacing of the light poles is of primary concern. Street trees can then be placed between pole locations with adequate spacing from lighting units to allow for the illumination of the pavement. Consideration should be given to mounting height, bracket arm length and type of tree, as well as the tree trimming maintenance issue.

1140-4.6.7 Underpasses

Underpass luminaires may be required beneath any structure whose transverse width (between outer edges of parapets) is 75 feet (23 meters) or more. Twin structures having less than 40 feet (12 meters) between adjacent parapets should be considered as a single structure for underpass lighting design purposes. When the separation between twin structures is between 40 and 60 feet (12 and 18 meters), consideration should be given to the use of post-mounted underpass units located between the two structures at a mounting height of approximately 20 feet (6 meters).

Occasionally, skewed structures less than 75 feet (23 meters) in width will require underpass units, especially where the omission of such units would result in a serious compromise of the uniformity criteria. Underpass lighting may be required when a structure prevents adjacent roadway units from providing lighting on the roadway beneath the underpass to the average intensity and uniformity of that provided for the roadway outside of the underpass. Each underpass must be evaluated on its own merits. However, installations employing luminaire mounting heights of 50 feet (15 meters) or less with underpasses whose length (structure width) is less than 1.5 times the luminaire mounting height and which are located in the middle third of the space between the roadway luminaires will not normally require underpass lighting units.

Adjacent underpasses may be located in such proximity that the roadway beneath the

underpass structures must have supplemental lighting during daylight hours. In these cases, guidance will be found in the **IES's Recommended Practice 22 (RP-22)**. This possibility should be considered when the length of the underpass exceeds 80 feet (24 meters).

When underpass luminaires are not required, and the conventional unit mounting height exceeds the vertical clearance of the structure, lighting units should be provided in advance of and/or beyond the outer edge of the parapet of the overpassing structure at a distance conforming with the following conditions:

Mounting Height (Feet)	Distance from Light Unit to Parapet (Feet)
32.5	40
40	60
50	90

When a staggered arrangement is used, luminaires should be located to the right in the direction of travel at the exit end of the underpass.

When the above separation distance cannot be provided, the designer should check the need for glare shields to protect the overpassing traffic.

When underpass luminaires are used, their effect should be considered relative to adjacent conventional units, and distances between the overpassing structure parapets and the nearest conventional units should be established accordingly.

When the overpassing structure clearance is greater than the mounting height, conventional highway light poles may be used under the structure, or the units may be mounted on piers or abutments. Under such circumstances, the above distances need not apply. See ***Figure 1198-10*** for underpass key unit locations.

1140-4.6.8 Tunnels

The goal of tunnel lighting is to provide for good driver visibility and a safe environment within a tunnel, day and night. The many factors that contribute to or detract from visibility need to be identified and their specific importance determined for each tunnel. The factors include:

1. Characteristics of the roadway approaches.

2. Characteristics of the tunnel roadway, walls and ceiling.

3. Characteristics of the area surrounding the tunnel portal.

4. Atmospheric and environmental conditions.

5. Characteristics of vehicular traffic operations.

6. Orientation of tunnel with respect to sun and sky.

Since the need for design of tunnel lighting is rare in **Ohio**, the designer should reference the **American National Standard Practice for Tunnel Lighting (ANSI/IES RP-22-1987)** for an in-depth discussion on how these factors relate to each other. The publication contains information that will assist in determining lighting needs, providing solutions and evaluating

resulting visibility within vehicular roadway tunnels.

1140-4.6.9 Median Mounted

When median-mounted lighting is used, the system will require supplemental units along the outside of the roadway when the effective width of the directional pavement is excessive. For example, if the directional pavement exceeds 48 feet (14.6 meters), and a 40-foot mounting height is used, supplemental units will be needed; or if the directional pavement exceeds 60 feet (18 meters) and a 50-foot mounting height is used, supplemental units should be added.

High-mast units can also be very effective along freeways when median mounted, either in a grass median with proper lateral clearance or barrier mounted.

1140-4.7 Placement Adjustments

Once all pole locations have been determined for a given design area, individual poles may require slight adjustment longitudinally or laterally to avoid interference with utilities, minor structures (e.g., catch basins, headwalls), drive aprons and ditches. In urban areas where building faces are often at the back of the sidewalks, attention should also be given to doorways to buildings, overhead canopies and signs, basements and utility vaults under sidewalk areas, and heated sidewalks. Such adjustments should normally not exceed a 5- to 6-foot shift per location.

1140-5 Circuit Design

1140-5.1 General

Proposed circuitry, including service pole locations, is a basic requirement of any lighting system. The following sections reflect general **ODOT** standard materials and methods; however, the lighting designer should always check with the specific **District** (or local maintaining agency) for confirmation of standards or preferred alternate materials and/or methods.

1140-5.2 Voltage

1140-5.2.1 General

Generally, lighting systems maintained by **ODOT** are 480 volt systems. Occasionally, stand-alone intersections utilizing combination poles will be lighted using 120 volt fixtures. If the maintaining agency is other than **ODOT**, the system voltage must be determined early in the design process.

1140-5.2.2 Voltage Drop

After formal approval of proposed service pole locations has been obtained from the power supplying agency and the proposed lighting layout has been approved by **ODOT** for detailed design, voltage drop calculations should be completed and included in the Stage 3 review submittal. The calculations should indicate the voltage at each lighting unit, at each lighted sign installation, at each “wye” in each circuit, and at the end of each circuit. The allowable voltage drop in each circuit is 5 percent. Reference should be made to ***Figure 1198-12*** for a sample voltage drop calculation for a 480-volt, two-wire grounded neutral system (current **ODOT** standard is 480-volt, three-wire grounded neutral).

1140-5.3 Control Center

1140-5.3.1 General

The principle type of lighting control center used by **ODOT** is the pole-mounted type with the photoelectric control mounted near the top of the wood pole. The designer should contact the individual **District** (or maintaining agency) to determine if a meter is required.

1140-5.3.2 Load

As part of the construction plan preparation, the designer should include a Control Center Data chart ***(Figure 1198-11)*** with all the required information. Details of the enclosures and how they are wired and mounted are shown in the **SCD HL Series**.

1140-5.3.3 Location

Service facilities should be located outside interchange areas, but within right-of-way limits. Where safety criteria applies, the supporting poles should be located more than 30 feet (9 meters) from the edge of traveled pavement. Special care should be taken in the location of service facilities to assure reasonable accessibility by maintenance personnel and equipment during wet weather. Areas such as at the toe of a steep slope below the access roadway and deeply swaled areas should be avoided, especially if they are subject to temporary flooding or drifting snow. Cross section data and right-of-way information shall be examined for each service pole and control center location to facilitate evaluation of its suitability relative to adjacent terrain. Each location shall also be formally cleared with the power supplying agency, and copies of all correspondence relative to electrical service shall be furnished to the **District** reviewing the lighting plan. During the initial contact with the power supplying agency, special offset requirements for service poles should be discussed, the supplying agency's system power requirements should be determined, and policies with respect to secondary lightning arrestor locations, grounding, metering, etc., should be clearly understood. Where local governmental agencies require that service pole areas be enclosed by fence, the designer should determine if grounding of the enclosure fence is required.

1140-5.4 Cable

1140-5.4.1 General

All new or completely replaced lighting systems maintained by **ODOT** shall be three-wire systems utilizing 5000 volt distribution cable. On projects that are within existing lighting systems, the new distribution cable should match the existing distribution cable.

1140-5.4.2 Cable Size

The preferred size of circuit cable is No. 4 **AWG**. If necessary to avoid an excessive voltage drop, larger cable may be used between the control center and the first lighting unit within a given circuit. If this procedure still results in a voltage drop exceeding 5 percent, the circuit cable size should be increased to No. 2 **AWG**, or larger in rare instances. Uniformity in circuit cable size and type of connector kit is highly desirable in a given project area. Reference should be made to **Section 1140-5.2.2** for documentation requirements for circuitry voltage drop calculations.

Pole and bracket cable, used and itemized separately with conventional units, is standardly No. 10 **AWG** and extends from the connector kits in the pole base to the lighting fixture.

1140-5.4.3 Cable Type

There are two types of circuit cable, distribution cable and duct cable. Distribution cable is single conductor wire with a polyethylene insulation, while duct cable is a factory preassembled cable in a coilable, high-density polyethylene pipe-type duct (typically 1 ½ inch diameter) with the specified number and size of insulated conductors.

1140-5.4.4 Cable Applications

Duct cable is often used within an interchange area since it is easily installed, cost efficient, and there is generally a reduced risk of it being disturbed since the interchange is within limited access right-of-way. Duct cable is generally not used along a highway where sign post installation, utility work, plantings and new curb/driveway cuts are apt to damage the cable.

Distribution cable is installed in conduit ***(Section 1140-5.5)*** along highways, under streets and ramps, and through bridges and concrete barrier.

1140-5.5 Conduit

1140-5.5.1 Conduit Type

Buried conduits should generally be rigid ferrous metal without encasement, including those which are specified for embedment in structure concrete; however, under the following conditions, buried conduits should be concrete encased:

1. Between primary service sources and distribution transformers.

2. Circuit interconnections on embankment slopes adjacent to separation structures.

3. On any slope steeper than 3:1.

1140-5.5.2 Conduit Size

The a list of conduit sizes appropriate for the usage indicated can be found in **Table 1197-7**; however, the nominal size may be increased where necessary to provide adequate space for the circuitry proposed:

1140-5.5.3 Conduit Fill

The required conduit size is determined by the number and sizes of cable to be contained in the conduit. The conduit should not be filled to more than 40 percent. The fill areas are determined by adding the cross sectional areas of all cables to be contained in the conduit and compared to the 40 percent fill area of the conduit.

1140-5.6 Splice Types

1140-5.6.1 Cable Splicing Kits

Splice kits are used in pull boxes to splice circuit wires together in the following situations:

1. Where a circuit branches.

2. Where a circuit enters the pull box adjacent to a lighted sign installation.

3. Where a circuit must change from duct cable to distribution cable (e.g., on either end of

a structure and at the base of the service pole).

Although splice kits are water resistant, splices in pull boxes should be kept to a minimum due to the inherent moisture problems which result.

1140-5.6.2 Connector Kits

Connector kits come in several types, as described in **CMS 725**. The most routinely used connector kits are the Type II and Type III Quick Disconnect Y Connector Kits, used to connect circuit cable with the pole and bracket cable in a conventional or post top light pole base.

1140-5.7 Pull Box

1140-5.7.1 General

The **ODOT** standard pull box is detailed on **SCD HL-30.11**. The 18-inch diameter pull box is intended for one circuit, or for a maximum of three connector kits; and the 24-inch diameter pull box is intended for two or three circuits, or for a maximum of six connector kits. If more than three circuits are involved, consideration should be given to the use of two boxes or a box of special design. Pull boxes, when used, are generally located within the alignment of the normal longitudinal trench.

City standard pull boxes may be used where consistent with the practices and policies of the maintaining agency.

In general, the use of pull boxes is discouraged because experience has indicated that inherent moisture problems results in more disadvantages than advantages. If flow lines within approximately 20 feet (6 meters) of a pull box location will permit drainage, a positive drainage system using 4-inch shallow underdrains, should be installed.

1140-5.7.2 Pull Box Types

The **ODOT** standard pull box is concrete **(CMS 725.08)**; however, plastic **(CMS 725.07)** may be used in urban lawn areas where there is no chance of vehicles driving over the box. Steel pull boxes **(CMS 725.09)**, although used in highway and interchange areas in the past due to their low cost, are no longer used because of the lids being difficult to secure in place. The pull box then fills with water and debris and/or becomes a safety issue with mowing equipment and maintenance personnel.

1140-5.7.3 Placement

Acceptable locations for pull boxes are as follows:

1. At the base of a pole used to mount a control center or disconnect switch, if located lower than the roadway proper.

2. At each end of a structure which carries electrical utility lines across the structure (approximately 10 feet (3 meters) beyond the ends of the parapet).

3. At the conduit riser for underground lighting circuits.

4. For connection of illuminated signs or underpass lighting to a lighting circuit.

5. At any split or tap in a lighting circuit that cannot be provided in the transformer base of

a light pole.

6. At a minimum, at one end of a conduit jacked under pavement.

In urban areas, the designer should avoid placing pull boxes within curb ramps, curb ramp landing areas, or too close to intersection radii where large turning vehicles will disturb the pull box or cover.

1140-5.8 Junction Box

Junction boxes, as detailed in **SCD HL-20.13 and HL-20.14**, are intended for use in concrete barrier and on structures, respectively. The designer should check with the **District** before using them. There is some concern that unless structure junction boxes are required for cable pulling purposes due to an excessively long conduit run (in excess of 300 to 400 feet (90 to 120 meters)), junction box lids end up missing because of screws becoming loose, and screws lost or not replaced during maintenance operations. The box becomes an easy access point for water, rodents and debris.

1140-5.9 Trenching

1140-5.9.1 General

The normal longitudinal trench alignment for distribution cable or duct-cable installations will be parallel to the controlling pavement edge or base line and in a direct line from pole to pole, as detailed on **SCD HL-20.11**.

1140-5.9.2 Trench in Paved Areas - Jacking

When circuits require crossing under existing ramp, mainline or arterial pavement open to traffic, steel conduit (3-inch minimum diameter) is often jacked or pushed under the pavement to minimize disruption to traffic and the pavement itself. Push pits must be dug behind guardrail or beyond the back of the paved berm, as shown on **SCD HL-30.22**. Concrete pull boxes are usually installed at the ends of the jacked conduit for cable splicing purposes.

1140-5.9.3 Trench in Paved Areas - Open Cut

The alternative to jacking conduit under pavement is laying conduit in open cut trench. When conditions are such that finding areas for push pits is difficult because of numerous utilities, right-of-way constraints, walls, sidewalks, etc., or if construction phasing is such that traffic can be satisfactorily maintained when trenching, open cut trench is used. Trench in paved areas is either T trench or “narrow slit type” trench as shown in **SCD HL-30.22**. The cost of open cut trench (including conduit and replacement backfill and pavement) is generally one-third more than jacking the same size conduit.

1140-6 <u>Foundations</u>

1140-6.1 Foundation Types

1140-6.1.1 Conventional

1140-6.1.1.1 General

The standard conventional light poles is a transformer base type. All poles located within 30 feet (9 meters) of the edge of traveled pavement shall include a cast aluminum transformer base meeting current **AASHTO** safety requirements for frangibility, with the

following exceptions:

1. Poles located along streets or roadways with design speeds less than 40 miles per hour and with adjacent pedestrian traffic shall be mounted on steel transformer bases.

2. High mast (tower) poles, and light poles mounted on concrete barrier medians or certain walls and structures, shall be anchor base types.

3. Light poles located on bridges shall have steel transformer bases.

1140-6.1.1.2 Drilled Shaft

Since roadways are normally constructed on stable subgrades, foundations for conventional light poles may be designed for the following minimum depths unless unstable soil conditions are suspected:

Light Unit Mounting Height (feet)	Min. Foundation Depth (feet)
Less than 40	6
40 - 44	8
45 - 55	10

1140-6.1.1.3 Median Mounted

Conventional light poles mounted on concrete barrier median shall be anchor base poles. The poles shall have drilled shaft foundations as shown above except that the depth shown shall be the depth extending below the base of the median barrier. The **SCD's** show additional details.

1140-6.1.1.4 Pilasters

Conventional light poles mounted on a bridge shall have steel anchor bases and are mounted on a projection beyond the normal outside face of parapet, or pilaster. Poles on pilasters should be located as near to piers as possible to reduce pole vibration. Where fencing separates the lighting pilaster from the bridge proper, a suitable handhold should be provided in the fencing to allow access to the pole handhole.

1140-6.1.2 High Mast

1140-6.1.2.1 General

Since light towers are usually located more than 30 feet (9 meters) from the traveled roadway, it is unlikely that the compaction for the roadway would have the same influence as for conventional light pole sites. Consequently, the design of foundations for towers will require a procedure involving soil classification at the site. Where soils profiles and/or reasonably accurate soils data are available from existing highway plans or other reliable sources, the soil classification and related foundation design process may proceed without the need for individual soil borings at each proposed site. However, designers are expected to exercise prudent engineering judgement in the event there is reason to suspect that existing soils information is not reliable for the tower site or if the information

available indicates that the allowable lateral soil resistance is not compatible with design guide tables and charts. In such cases, individual soils borings should be obtained for each tower site which is suspect, and specific designs should be prepared for each tower foundation.

Reference should be made to the suggested procedure for light tower foundation design in ***Section 1140-8***. This procedure is applicable to projects where reasonably reliable soils data is available.

1140-6.1.2.2 Maintenance Platforms and Grade Flattening

Maintenance platforms and grade flattening have been found to be traps for debris. The steepened slopes above and below the flattened area or the diversion of water along the wall of the platform are sources of slope erosion. These areas also require the manual trimming of vegetation since chemical control only leaves bare ground which is even more susceptible to erosion. These negative aspects and the resulting increased maintenance are more detrimental than the nicety of the flat area about the base of the high-mast lighting unit. Therefore, the use of these features is no longer recommended.

1140-6.1.2.3 Median Mounted

Light towers mounted on, or more correctly, incorporated into, concrete barrier median are treated similar to overhead sign supports. Their foundation size (usually 36-inch diameter) requires a widening of the median barrier by use of 40-foot (12 meter) transitions as shown in the **SCDs**. When considering median mounted tower lighting, the designer must consider the shoulder width either side of the median. An adequate width shoulder must be available for the lowering of the luminaire mounting ring and the maintenance vehicle.

1140-6.1.3 Low Mast

1140-6.1.3.1 General

Generally, low-mast lighting (defined as a single high mast luminaire or as a dual high mast luminaire (2 foot (0.6 meter) offset) mounted on a pole with a 50-foot nominal mounting height) requires a 2-foot (0.6-meter) diameter by 10 feet (3 meters) deep foundation in non-sloping areas. Deeper foundations should be considered in steeper sloping areas or areas of poor soils.

1140-6.1.3.2 Median Mounted

Low-mast units are frequently mounted on concrete barrier median separating two-lane groups of traffic each having three or four lanes plus shoulders. The anchor base units utilize a rectangular pole base plate mounted on top of 50-inch barrier. The foundation extends 10 feet minimum below the base of the barrier as detailed in **SCD HL-20.13**.

1140-6.1.4 Decorative

Decorative poles should be looked at on an individual basis when determining foundations. Often, the standard 6-, 8- or 10-foot depths can be used for poles 50 feet in height or less with possible modifications of the formed top 6 inches to accommodate larger decorative bases or sidewalk paver areas. Foundations for decorative units over 50 feet in height should be determined by a soils engineer furnished with soils information, pole heights and luminaire weights, quantities and effective projected areas.

1140-6.2 Locations

1140-6.2.1 Conventional

Along uncurbed sections of roadway, the normal location of conventional light poles is 6.5 feet (2 meters) behind the face of guardrail. Where guardrail is not provided, the normal offset distance of the pole from the edge of pavement should be the same as if guardrail were provided, and frangible bases should be used in accordance with the latest **AASHTO** safety requirements.

In curbed areas, the normal location of conventional light poles is 2.5 feet (0.8 meter) behind face of curb (2 feet (0.6 meter) minimum clear), but no closer than adjacent utility poles near the curb.

For improved safety, where the typical section of the roadway will allow a greater setback than normal, poles may be located farther from the pavement edge, consistent with available bracket arm lengths.

1140-6.2.2 High Mast

1140-6.2.2.1 General

High-mast units must have 30 feet (10 meters) minimum clearance from the edge of pavement/traveled way (i.e., painted edge line) on freeways and expressways in the absence of guardrail. A 40-foot (12 meter) clearance is preferred if maintenance access is not compromised. The designer should be aware of culverts, ditches, fences, right-of-way/limited access limits, and underground and overhead utilities when selecting high-mast pole locations. Guardrail should not be installed solely to “protect” a high-mast unit unless absolutely necessary as the guardrail itself becomes an object for road users to strike. If guardrail or concrete barrier will be required to protect bridge columns or overhead cantilever or truss signs, the guardrail may be extended no more than 75 feet (22 meters) to include a high mast pole. If guardrail is present due to a 3:1 slope or steeper, a maintenance platform should be considered.

1140-6.2.2.2 Maintenance Platforms

The use of maintenance platforms is discussed in **Section 1140-6.1.2.2** When used, the clearance from the edge of pavement to the nearest edge of the platform wall must conform to the minimum offsets in the **ODOT L&D Manual Volume One**.

1140-6.2.3 Low Mast

Unless mounted on concrete barrier median, low-mast units may be mounted on breakaway transformer bases or anchor bases, in which case, offsets must comply with those described for conventional poles ***(Section 1140-6.2.1)*** or high-mast poles ***(Section 1140-6.2.2)*** as appropriate.

1140-6.2.4 Decorative

Since most projects requiring decorative poles will be in an urban (i.e., curbed) area, the minimum offset to maintain 2 feet (0.6 meter) minimum lateral clearance from curb face will apply, with consideration given to overhead and underground utilities. Decorative post-top pole placement in the pedestrian/picnic area of a rest area varies with the individual layout, but an offset of 5 feet (1.5 meters) from the edge of the sidewalk is often used.

1140-7 Grounding

1140-7.1 Towers

Two ground rods are required (and separately itemized in the plan) for each high-mast pole. The second ground rod is associated with the lightning protection system required with each tower.

1140-7.2 Conventional

1140-7.2.1 General

All conventional, decorative and low-mast poles require one ground rod. This includes poles mounted on concrete barrier median. Details for pole grounding are shown on **SCDs HL-20.11 and HL-20.13** (median mounted).

1140-7.2.2 Pilasters

Poles mounted on bridge pilasters are grounded via grounding bushings in the steel conduit to interconnect structure conduit system with structure grounding system. **SCDs HL-20.14 and HL-50.21** provide details.

1140-7.3 Bridges

A structure grounding system (described in **CMS 625.17** and detailed in **SCD HL-50.21**) shall be paid with each bridge as part of the lighting plan quantities. Although the structure grounding system pay item is composed of several ground rods, cable, etc., the callout location on the lighting plan for the pay item is at the centerline station of a fixed pier.

1140-7.4 Fences

Where overhead power lines cross a fenced roadway right-of-way, or where overhead transmission lines rated 110 KV or higher are parallel to roadway fences and the transmission line easement is contiguous to the roadway right-of-way, the roadway fences shall be grounded as shown and described on **SCD HL-50.11**.

1140-8 Suggested Procedure for Light Tower Foundation Design

The following information and attachments are intended to be used in determining caisson lengths for tower foundations without the need for an extensive soil investigation at each tower location.

Regardless of the type of foundation used, information on soil classifications and soil strengths which resist the lateral movement must be established for the foundation design and also to determine the lateral soil pressure. In most cases the subsurface investigations and soil borings made for the Project Soils Profile and Bridges will be sufficient to determine the soils classification and strength. However, the determination of soil parameters should be made by a soils engineer. If the soil strength and classification are relatively uniform on a given project site, one value for lateral soil pressure can be used, and the need for extensive soil investigations at each tower location can be avoided. Recommended lateral soil pressure values are shown on ***Table 1197-9***.

In addition to the lateral soil pressure, load reactions on the tower, horizontal shear, uplift and overturning moments shall all be taken under consideration when designing foundations. The foundations shall be designed for loads equal to, or greater than, the maximum loads of the tower design, with considerations given to economics and construction feasibility.

Design calculations to determine load reactions and horizontal shear on light towers shall comply with

applicable **AASHTO** requirements as set forth in the latest issue of **Standard Specifications for Structural Supports for Highway Signs, Luminaires, and Traffic Signals**, except that the design wind load shall be based on wind speed of 90 miles per hour, with a maximum load of six luminaires, each weighing 75 pounds, with a maximum actual projected area of 3.5 square feet and mounted in one horizontal plane.

When the values for allowable lateral soil pressure, total lateral force, and total moment about the resisting surface of the tower have been determined, the required embedded depth can be found using the Foundation Embedment Nomograph in ***Table 1197-10***, which is based on E. Czerniak's recommendations for lateral soil pressure of various soil strengths and classifications. This nomograph satisfies foundation criteria currently used for **Ohio** designs and is valid for caisson type foundations where the embedded depth does not exceed ten times the foundation diameter.

Values for lateral force and overturning moment must be adjusted to a value per foot of caisson width prior to using the nomograph. The normal tower foundation diameter shall be 36 inches unless the tower anchor base plate and bolt circle requires a diameter of 42 inches.

Since the foundation embedment obtained from the nomograph is the depth below the resisting surface of the earth and not from the ground line, the total required foundation length can be obtained by increasing the graph value by 1 or 2 feet. For design purposes, the foundation length determined from the graph should be increased to the next longer length that is a multiple of five.

The foregoing design procedure provides a suitable design method for determining the required caisson length as functions of soil classification, shear force and overturning moment. The soils likely to be encountered have been categorized into six values of allowable lateral soil pressures. Where existing soils information will permit identification for strength and classification, it will not be necessary to use refined design procedures involving extensive soil exploration.

Table 1197-11 presents recommended tower foundation depths calculated for structures with round tapered shafts designed in accordance with the **1975 AASHTO Standard Specifications for Structural Supports for Highway Signs, Luminaires, and Traffic Signals** for a 90 miles per hour wind zone when supporting the following load:

- Six cylindrical luminaires with projected area of 3.5 square feet (C_D = 0.5) and weighing 75 lbs. each.

- One cylindrical head frame assembly with projected area of 5.3 square feet (C_D = 1.0) and 340 lbs. top latched lowering device.

1141 PLAN PREPARATION / PRODUCTION

1141-1 General

The **L&D Manual Volume Three** generally describes **ODOT** plan preparation and production guidelines and standards, including plan sheet format (sheet layout, text size, symbols, line weights, file-naming conventions, etc.). For reference, **Figures 1314-8S through 1314-10S of the Sample Construction Plans** produced by the **Office of Production** are sample Lighting Plan sheets. Additional information is provided in this Section and ***Section 1140*** regarding lighting items in plans.

1141-2 Coordination with Utilities

Existing underground and overhead utility lines shall be shown in the lighting plan. Proposed utilities lines shall also be shown. Many utility companies are members of the **Ohio Utility Protection Service (OUPS)**. However, some utility companies which are not must be contacted individually. When the lighting improvement is but part of a larger project, the lighting designer should coordinate with the other designer(s) to avoid multiple requests for the same information.

The power company which will be supplying power should be contacted early in the design process to confirm that power will be available at the location(s) being considered for power services. The designer will also need to obtain from the power company any company requirements for customer services along with the costs that the power company expects to bill for their work in providing each service. The designer should later confirm with the power company the details for service at each of the points finally chosen. Written documentation signed by both the designer and the power company representative should be provided in the supporting documents accompanying the review submissions.

1141-3 Plan Composition

1141-3.1 General

For a normal **ODOT** project, the documentation of the work to be done will consist of the **Construction and Material Specifications (CMS), the Supplemental Specifications listed on the Title Sheet of the Plans, the Standard Construction Drawings (SCD) listed on the Title Sheet of the Plans and the Proposal.**

The highway lighting plan is usually a portion of a larger highway construction project. In such cases, the lighting plan will be a section of the plan for the overall improvement and listed as such in the index of sheets which appears on the title sheet. However, at times highway lighting will constitute the entire project. In those cases, items normally not included in the lighting plan must be added. Field offices, construction layout stakes and provisions for maintenance of traffic during construction are some of the things that may be needed.

The lighting portion of a plan usually consists of the following subdivisions which are to appear in the order listed.

1. General Notes.
2. General Summary of Lighting Items.
3. Sub Summaries.
4. Schematic Index.
5. Plan Views.

6. Special Details.

7. Circuit Diagrams, if used.

8. Tower Cross Sections, if used.

A title sheet is added as the first sheet of the plan only in those project where the only work is the highway lighting improvement.

1141-3.2 General Notes

General Notes should be limited to explanations required to clarify details of the proposed work which are not satisfactorily covered in the specifications, supplemental specifications, standard construction drawings or elsewhere in the plans. General Notes are also commonly used for standard bid items which require supplemental information not otherwise shown in the plans or specifications, such as the specific luminaires that are to be installed or the method of maintaining the existing lighting. When a pay item varies from the standard definition to the point that it becomes an “as per plan” item, or an “item special” is used to cover work for which no standard item exists, a **Plan Note** is required to define the work and materials that are included in the price bid for that particular item. **Section 1142** contains **Plan Notes** for a number of commonly encountered situations.

1141-3.3 General Summary

The lighting quantities can be placed in the project General Summary under the heading “Highway Lighting.” However, since the lighting portion of the plan is frequently prepared separately, they are often located in the lighting section of the plan with a cross reference under the heading in the project General Summary. The format of the Highway Lighting General Summary follows that of the project General Summary. From left to right columns are used as follows: columns to the left of the sheet bring forward the subtotals from each sub-summary sheet using one column per sub-summary sheet; the next group of columns sub-totals the units by funding participation split; the final group of columns contains item number, item extension number, grand total, unit of measurement, and item description information. The **ODOT Item Master** is a list of commonly used bid items including the item extension number, unit of measurement and description for each item listed. Blank lines should be used to separate the line entries into groups of five lines.

1141-3.4 Sub-summaries

Sub-Summary Sheets compile the pay items for each node and link of the highway lighting improvement. **L&D Manual Volume Three Sample Plan Sheets, Figure 1314-10S** is for a sample highway lighting sub-summary sheet.

1141-3.5 Schematic Index

L&D Manual Volume Three Sample Plan Sheets, Figure 1314-8S is for a sample highway schematic index sheet.

1141-3.6 Plan Sheets

See **L&D Manual Volume Three Sample Plan Sheets, Figure 1314-9S** for a typical plan sheet. Plan sheets for tower lighting are usually prepared at a scale of 1 inch equals 100 feet. Plan sheets for other types of lighting are normally prepared at a scale of 1 inch equals 50 feet. However, lighting plans may be prepared to other scales when appropriate and agreed to by the **District**. Each lighting plan sheet should include the following information:

1. Pavement and paved shoulder edges.

2. Curb lines, curb ramps, raised medians and islands and painted islands or similar channelizations.

3. The beginning and the end of the tapers used at the start of each deceleration lanes

4. The end of each acceleration lane.

5. Bridge structures and retaining walls, including pier and abutment locations, and length of approach slabs. Include **ODOT** structure number when appropriate.

6. Drainage culverts and flow lines.

7. Existing and proposed overhead and underground utilities. Show width and/or boundaries of the utility right-of-way or easement and fence grounding points where overhead electrical lines are involved.

8. Type, wattage or lumen rating, and ownership of existing lighting in the project area, and planned disposition.

9. Maintenance jurisdiction boundaries.

10. Funding participation boundaries.

11. Future lighting unit locations needed to portray the coordination between adjacent improvements.

12. A north arrow, located on the upper right corner of the sheet.

13. A legend, or reference to the plan layout sheet showing the legend. The legend shall indicate by appropriate symbol the various nodes (e.g., light poles, light towers, pull boxes, junction boxes, power services, etc.) and links (e.g., conduits with distribution cable, unitized cable in duct assemblies, etc.) to be installed.

14. The location of each light pole foundation, conduit crossover, pull box, control center, tower, etc., by centerline or baseline station and offset distance from the controlling pavement edge. Include the maintenance platform type, if any.

15. Existing and proposed rights-of-way (R/W).

16. Guardrails and barriers.

17. Illuminated signs. Show an appropriate symbol, the sign installation number, the centerline station and the total wattage of the installation.

18. Combination supports. Clearly indicate the nature of the combined support (e.g., Signal, Sign & Luminaire, Signal & Luminaire, Sign & Luminaire) and show all applicable data for electrical service and the separate bid items necessary to provide the lighting components. Add a cross-reference to the Traffic Control Plan sheet showing the support details.

19. Begin Project and End Project, along with work limits for the mainline and for each crossroad.

20. Match lines. Avoid the use of match lines along the centerline of any illuminated roadway.

21. Station equations. Show the station equations along lines of survey, between centerline of route and baselines of roadways, crossings between routes and intersections of roadways.

22. If landscaping is part of the project, proposed trees in areas adjacent to the proposed light poles should be shown.

1141-3.7 Special Details

Special detail sheets should show only those details which are not covered in the **SCDs, the CMS or the Supplemental Specifications**. In cases where modification of a standard detail is necessary, variations from the standard should be clearly identified. Clearly indicate the location(s) to which the detail applies especially if it does not apply to all locations within the project. The designer should carefully review the latest edition of the **SCD HL series** to determine if a particular detail has been covered before creating of a special detail drawing.

If the lighting plan includes underpass lighting, the following should be included for each lighted underpass: a detail view indicating the location of each luminaire; the disconnect for the underpass lighting; and the routing of all conduits comprising the service to underpass lighting from the pull box or junction box that is the point of connection of the main lighting circuit.

1141-3.8 Circuit Maps

When the lighting installation is large and circuits continue across several sheets, a map of each circuit in abbreviated detail should be included. The Control Center Data chart ***(Figure 1198-11)*** should be included on the map of the first circuit (numbered “1" or ”A”) radiating from the service point. The maps of all other circuits radiating from that service point should contain a cross reference to the sheet on which the data table for that particular service appears. If circuit maps are not being prepared for an installation, then the Control Center Data chart should be located on the plan view sheet showing the location of the service.

1141-3.9 Tower Cross Sections

To support the pole height selected for each tower, the designer will usually provide pavement elevation(s) for the roadway(s) lighted by each tower and finished grade at the base of the tower in tabular form on supplemental worksheets and no cross sections will be drawn.

In some cases, this will be illustrated by a cross section drawn from the edge of pavement out through the location of the tower, or if the tower lights multiple roadways, a cross section will be drawn from each roadway out through the tower location.

1141-4 Submissions and Project Development Reviews

1141-4.1 General

L&D Manual Volume Three, Section 1400 and ***Section 140-7*** contain general information about the various submissions required and reviews conducted during the development of the plan for a project. The Scope of Service may also contain specific requirements for the project at hand. Normally, reviews of the highway lighting portion of the plan will be conducted at Stage 2 and Stage 3 of the Plan Development Process.

1141-4.2 Project Development Process Stage 2

At Stage 2, the lighting plan is not complete, but the essentials are in place. The location of each luminaire and support is known. The calculations supporting those locations have been made. The possible power service points have been found and those with the best fit selected. Circuits have

been laid out and preliminary checks made to determine that cable sizes will not be excessive. A rough estimate of the load at each power service point has been made to determine that the equipment will be of an acceptable size. The serving utility company has been contacted, and written confirmation obtained from the company that service will be made available at the desired location(s) and that the service will be of the concept envisioned by the lighting designer.

Two sets of full-size (22" x 34") prints of the preliminary highway lighting plans should be submitted to the appropriate **District** as part of the entire Stage 2 submittal process. Each of the full size sets is to be accompanied by a half-size (11" x 17") set of the roadway plan view sheets. The roadway plan views are not reviewed during the lighting review, but are for the lighting reviewer's reference.

Two copies of the computations and/or computer analyses used to support the illumination design should also be included with the Stage 2 submission. A separate analysis for each of the proposed luminaire packages is required. Normally, a package will consist of luminaires from a single manufacturer. Normally, there will be three luminaire packages. The luminaires commonly used in the design of **ODOT** highway lighting installations may be obtained from the **Office of Traffic Engineering**.

Additional half size sets of the highway lighting plan may be required if any of the lighting will be turned over to a local government to maintain. Normally, these half-size sets will not be accompanied by a set of the roadway plan views or by the illumination calculations.

The exact number of review sets and the composition of each review set (full or half-size, the supporting documents to accompany each set, etc.) should be verified with the **District** prior to making the submission.

1141-4.3 Project Development Process Stage 3

At Stage 3, the lighting plan is now complete. All that remains is to clean up the CADD files and print the tracings. Notes have been written. Summaries are completed. Details drawn. The serving utility has committed in writing to the details of each service. All utility companies, either directly or through their respective protection services, have confirmed that clearances are adequate. Comments from previous reviews resolved. Nothing has been omitted.

Two sets of full-size (22" x 34") prints of the highway lighting plans should be submitted to the reviewing **District**. Each of the full-size sets is to be accompanied by a half-size (11" x17") set of the roadway plan view sheets. The roadway plan views are not reviewed during the lighting review, but are for the lighting reviewer's reference.

Two copies of the computations and/or computer analyses used to support the design are also to be included with the Stage 3 submission. The illumination calculations may be omitted if there has been no revision since the previous submission and the previously submitted calculations were approved as adequate. If the luminaire placement calculations are omitted, this should be stated and the reason noted in the letter of submission. Support height calculations (tower height calculations) and cable sizing calculations (voltage droop or drop calculations) normally come in for review for the first time at this point. A written response to the comments and recommendation from the previous review is to be included.

Additional half-size sets of the highway lighting plan may be required if any of the lighting will be turned over to a local government to maintain. Normally, these half-size sets will not be accompanied by a set of the roadway plan views or by the illumination calculations.

The exact number of review sets and the composition of each review set (full or half-size, the supporting documents to accompany each set, etc.) should be verified with the **District** prior to making the submission.

1141-4.4 Submission of Final Tracings

Final 22" x 34" mylar tracings should be submitted to the **District** for processing. The submittal will state that all outstanding review comments and recommendations have been resolved and that all parties have received written copies of the resolutions and are in accord with them. The **District** will then deliver the tracings to **Central Office** for final plan processing preparatory to advertising for construction contracts.

1141-4.5 Review Checklists

1141-4.5.1 General

The following checklists were developed to aid **ODOT** design reviewers; however, they should be helpful to original designers in preparing plans for submission for approvals.

1141-4.5.2 Stage 2 Plans

General items to check for Stage 2 plans:

1. Is the plan drawn to a scale of not less than 1 inch equals 200 feet?

2. Does the plan show edge of pavement and edge of paved shoulder, beginning and end of the taper at the start of parallel deceleration lanes, end of taper on acceleration lanes, raised medians and islands painted islands and all structures?

3. Are drainage culverts and catch basins shown?

4. Are pier and abutment locations shown for all interchange structures?

5. Are corporation lines shown?

6. Are existing and proposed overhead electrical and communications lines and underground utilities shown?

7. Does the submission show the **IES** distribution, lamp type and wattage or lumen rating, mounting height and ownership of each existing lighting unit in and adjacent to the project area?

8. Is the location for each proposed lighting unit shown?

9. Are future lighting unit locations, which must be coordinated with the proposed lighting, shown?

10. Is the proposed power service(s) shown?

11. Is the proposed circuit(s) shown?

12. Does the submission include supporting documentation showing that the lighting design criteria have been met, with regard to such things as initial intensity, uniformity ratios, mounting heights, luminaires and lamps, etc.?

1141-4.5.3 Stage 3 Plans

1. General items to check for Stage 3 plans:

   a. Are symbol legends uniform for the entire lighting plan? Do tower lighting symbols indicate which are symmetrical, which are asymmetrical and which are long and narrow distributions?

   b. Have all guardrails and barriers been shown on the lighting plan sheets?

   c. Have applicable structure numbers for each bridge been shown on the lighting plans?

   d. Are the pertinent jurisdictional boundaries such as State, County, Township, City or Power Company Service Area shown?

   e. Has consideration been given to the need for glare shields?

   f. Where existing or proposed overhead power transmission, power distribution, or telephone lines are located in the vicinity of light poles, light towers, or overhead signs, do the vertical and horizontal clearances from the proposed lighting installations meet the requirements of the **National Electrical Safety Code** and the requirements of the utility companies?

   g. Are tower pole locations located beyond clear zones established in **L&D Manual Volume One Section 600.2**? If not, has the hazard created been properly mitigated?

   h. Have **FAA** glide path clearance requirements been met when the project is near an airport?

   i. Are all service pole and control center locations accessible for maintenance purposes, particularly during wet weather and winter seasons? Where these facilities must be located at ground elevations below connecting conduit systems, have pull boxes been provided at the base to prevent any incoming water from rising into the control equipment?

   j. Is circuitry clearly delineated?

   k. Are pilasters, junction boxes, conduit, etc. shown on the bridge and retaining wall plans?

   l. Are pilasters and conduit systems included on structures where provisions for future lighting are required?

   m. Have structure grounding systems been included on all bridges requiring same?

   n. Are locations of special trenching (deeper or wider than normal) clearly delineated on the plans?

   o. Are fence grounds needed?

   p. Are items with other than normal project funding clearly indicated both on the plan sheets and in the summaries and are the participation splits for each item defined?

   q. Has supporting documentation for the height of each light tower been provided?

r. Has supporting documentation for the depth of each tower foundations been provided?

s. Have cable sizing (voltage droop or drop) calculations been provided?

t. Has the serving power company committed in writing to provide service of the type proposed at each service point being proposed?

u. Is there a need to maintain existing lighting on the project? If so has the "Maintain Existing Lighting" note been included.

v. Are required lighting **Standard Construction Drawings** listed on the title sheet of the plans with appropriate dates?

w. Have **District** and Local preferences been incorporated into the plan?

2. Details to check:

a. Are there any poles which need to be of special heights to compensate for the pole being mounted significantly higher or lower (e.g., on a tall retaining wall, on ground below a bridge and reaching above the bridge, etc.) than the roadway?

b. Are voltage and type of service furnished by the power supplying agency shown?

c. Has the control center data table been shown?

d. Where fencing is to be installed around a control center, have the necessary dimensions, notes, and grounding and other details been shown and provisions made for payment?

e. Are all conduits included in lump sum bid items clearly identified and material specified?

f. Are sizes and locations of all cable clearly shown?

3. General Notes:

a. Are the Plan Notes listed in **Section 1142** included, when applicable?

b. Where reference has been made to specific products, has the "or equal approved by the Engineer" phrase has been include?

c. Where there are median mounted poles, does the roadway plan provide the proper barrier?

4. Summaries:

a. Are sub-summaries in accordance with the sample plan sheet?

b. Where a combination support is proposed, is the separation of bid items between the highway lighting plan and the signal or signing portion of the plan clear and coordinated?

c. Have anchor bolts been separately provided for poles where the standard anchor bolts supplied with the pole will not be available (i.e., relocated poles) or will not fit the

mounting condition (i.e., bridge or retaining wall) encountered?

d. Has trenching been separated according to depth?

e. Is conduit to be encased in concrete before closure of the trench separated from that which will not?

f. Is each conduit to be placed in an area where the surface is not to be disturbed being installed by jacking or boring?.

g. Are items with other than normal project participation in the funding properly identified and in separate line items from those with normal project funding?

h. For special bid items, are methods of measurement and basis of payment clear? Have all necessary notes and details been shown? Does description of the item clearly indicate that component parts not specifically mentioned, but required for satisfactory operation shall be furnished and considered paid for as part of the item?

i. Have sub-summary sheet totals been properly carried to the General Summary ?

j. Does the item description of each line item comply with the requirements of **Item Master**? Is the item number and item extension number correct for the description and unit of measurement used?

Intentionally blank.

1142 PLAN NOTES

1142-1 General

This area is reserved for sample/typical **Plan Notes** that have been developed for highway lighting.

1142-2 202, Luminaire Removed

This item of work shall consist of removing an existing luminaire. The luminaire shall become property of the contractor and shall be properly disposed of off of the project site.

Payment will be made at the unit price bid under CMS Item 202, ”Luminaire Removed” for each luminaire removed which shall be full compensation for all labor, materials and incidentals required to complete this item in a satisfactory and workmanlike manner.

1142-3 202, Luminaire Removed for Storage

This item of work shall consist of removing an existing luminaire and properly storing it on the project site for pick up by ODOT forces.

Payment will be made at the unit price bid under CMS Item 202, ”Luminaire Removed for Storage” for each luminaire removed which shall be full compensation for all labor, materials and incidentals required to complete this item in a satisfactory and workmanlike manner.

1142-4 202, Luminaire Removed for Reuse

This item of work shall consist of removing an existing luminaire and properly storing it on the project site for re-erection.

Payment will be made at the unit price bid under CMS Item 202, ”Luminaire Removed for Reuse” for each luminaire removed and stored which shall be full compensation for all labor, materials and incidentals required to complete this item in a satisfactory and workmanlike manner.

1142-5 202, Light Pole Removed

This item of work shall consist of removing an existing light pole. The light pole shall become the property of the contractor and shall be properly disposed of off of the project site.

Payment will be made at the unit price bid under CMS Item 202, ”Light Pole Removed” for each pole removed which shall be full compensation for all labor, materials and incidentals required to complete this item in a satisfactory and workmanlike manner.

1142-6 202, Light Pole Removed for Storage

This item of work shall consist of removing an existing light pole including the bracket arm(s), transformer base (if any) and properly storing this assembly on the project site until re-erected.

Payment will be made at the unit price bid under CMS Item 202, “Light Pole Removed for Storage,” for each pole removed and stored which shall be full compensation for all labor, materials and incidentals to complete this item in a satisfactory and workmanlike manner.

1142-7 202, Light Tower Removed for Storage

This item of work shall consist of removing an existing light tower, including lowering device and

properly storing it on the project site for re-erection.

The tower shall be properly supported to prevent bending of the pole or damage to the lowering device during storage on the project site.

Towers which are not being re-erected as part of this project will be picked up and moved to offsite storage by ODOT forces.

Payment will be made at the unit price bid under CMS Item 202, ”Light Tower Removed for Storage” for each tower removed and stored and shall be full compensation for all labor, materials and Incidentals required to complete this item in a satisfactory and workmanlike manner.

1142-8 202, Light Pole Foundation Removed

This item of work shall consist of removing an existing light pole foundation to a minimum of 1 foot below finished grade, or removing the foundation completely, backfilling the resultant depression with compacted soil and restoring the disturbed area.

Payment shall be made at the unit price bid under CMS Item 202, “Light Pole Foundation Removed” for each foundation removed which shall be full compensation for all labor, materials and Incidentals required to complete this item in a satisfactory and workmanlike manner.

1142-9 202, Pull Box Removed

This item of work will consist of removing and properly disposing of an existing pull box. The resultant opening shall then be backfilled to grade with suitable compacted soil and restored to match the surrounding area.

Payment will be made at the unit price bid under CMS Item 202, “Pull Box Removed” for each pull box removed which shall be full compensation for all labor, materials and Incidentals required to complete this item in a satisfactory and workmanlike manner.

1142-10 625, Pull Box Cleaned

This item of work shall consist of cleaning an existing pull box by removing any existing cables not being reconnected, and debris so that new cables can be installed. Any unused openings shall be closed. Disturbed areas near the pull box shall be cleared of weeds or debris and shall be fully restored. Material removed shall become the property of the contractor and shall be properly disposed of off of the project site.

Payment will be made at the unit price bid under CMS Item 625, “Pull Box Cleaned" for each pull box cleaned which shall be full compensation for all labor, materials and incidentals required to complete this item in a satisfactory and workmanlike manner.

1142-11 625, Conduit Cleaned and Cables Removed

This item shall consist of cleaning an existing conduit by removing existing cables, mud and debris so that new cable can be installed. Incidental to the cleaning is the installation of bushings and/or couplings on the ends of existing conduit as required. Materials removed shall become the property of the contractor for proper disposal off of the project site. Disturbed areas shall be properly restored.

Payment will be made at the unit price bid under CMS Item 625, “Conduit Cleaned and Cables Removed" per foot of conduit cleaned which shall be full compensation for all labor, materials and incidentals required to complete this item in a satisfactory and workmanlike manner.

1142-12 202, Disconnect Existing Circuit, As Per Plan

This item of work shall consist of the disconnection of an existing light circuit at a pull box or transformer base.

Disconnection at a pull box shall involve cutting the existing circuit and removing all splice kits. Any cable that is to be abandoned shall be terminated from the pull box so that no cable is left in the box.

Disconnection at a transformer base shall involve cutting the existing circuit and removing all connector kits. All duct-cable not to be reused shall be removed from the transformer base and the existing conduit in the foundation shall be cleaned of all cable and debris so that the new duct-cable can be installed. All existing cable to remain active shall be cut in a manner so that there is sufficient cable left for re-connection.

Those wires that are to remain on active circuits shall have a water-resistant seal at the cut end. The water-resistant seal shall be accomplished by plugging the deactivated port of an existing connector kit or by installing a cable splice kit on the cut end of the cable.

Payment shall be made at the unit bid price under CMS Item 202, ”Disconnect Existing Circuit, As Per Plan” at each location where disconnection is required which shall be full compensation for all labor, materials and incidentals required to complete this item in a satisfactory and workmanlike manner.

1142-13 202, Power Service Removed, As Per Plan

This item of work shall consist of the removal and disposal of an existing power service.

Included for removal will be all power service components such as the wood pole, weather head and all above grade wiring, control center enclosure, photoelectric cell and all other appurtenances. The cable enclosed in the 2-inch conduit which runs into the ground shall be cut where it exits the 2-inch conduit, approximately 2 feet below the ground, and shall be removed with the 2-inch conduit. The remaining buried cable shall be abandoned. All disturbed areas shall be restored to match the surrounding area.

All power service components including the control center, pole, photoelectric cell, 2-inch conduit, weather head and all above-ground wiring shall become the property of the contractor and shall be properly disposed of off the project site.

This item will also compensate the contractor for coordinating with the power company to insure that the company disconnects the service, and that items which belong to the power company and are removed by the contractor such as the meter base shall be returned to the power company.

Payment will be made at the unit price bid under CMS Item 202, “Power Service Removed, As Per Plan" for each service removed which shall include all labor, materials and incidentals required to complete this item in a satisfactory and workmanlike manner.

1142-14 Luminaire, High Mast, As Per Plan

The luminaire arrays and associated illumination test areas specified in CMS 725.21 are hereby waived. Instead, the luminaires for high-mast lighting shall meet the following requirements:

Luminaires for high-mast lighting units with symmetric distribution shall be Holophane "HMST" with photometric distribution 36383, General Electric "HM" with photometric distribution 6312, or Cooper "HMX" with photometric distribution HMX4SDW, or equal as approved by the Engineer.

Luminaires for high-mast lighting units with asymmetric distribution shall be Holophane "HMST" with photometric distribution 46973, General Electric "HM" with photometric distribution 7349, or Cooper "HMC" with photometric distribution HMC4S3D, or equal as approved by the Engineer.

Luminaires for high-mast lighting units with long narrow distribution shall be Holophane "HMST" with photometric distribution 36801, General Electric "HM" with photometric distribution 8946, or Cooper "HMC" with photometric distribution HMC4S1DL, or equal as approved by the Engineer.

In addition, other luminaires will be considered if the designed intensity and uniformity are provided using the designed pole locations and the designed number and type of fixtures per pole.

1142-15 Luminaire, Low Mast, As Per Plan

The luminaires shall be as specified for high-mast luminaires in CMS 725.21 except that the luminaire arrays and associated illumination test areas are hereby waived. In addition, the luminaires for low-mast lighting shall meet the following requirements:

Luminaires for low-mast lighting units with symmetric distribution shall be Holophane "HMST" with photometric distribution 36383, General Electric "HM" with photometric distribution 6312, or Cooper "HMX" with photometric distribution HMX4SDW, or equal as approved by the Engineer.

Luminaires for low-mast lighting units with asymmetric distribution shall be Holophane "HMST" with photometric distribution 46973, General Electric "HM" with photometric distribution 7349, or Cooper "HMC" with photometric distribution HMC4S3D, or equal as approved by the Engineer.

Luminaires for low-mast lighting units with long narrow distribution shall be Holophane "HMST" with photometric distribution 36801, General Electric "HM" with photometric distribution 8946, or Cooper "HMC" with photometric distribution HMC4S1DL, or equal as approved by the Engineer.

In addition, other luminaires will be considered if the designed intensity and uniformity are provided using the designed pole locations and the designed number and type of fixtures per pole.

1142-16 625, Luminaire, Conventional, As Per Plan

In addition to the requirements of ODOT's Construction and Material Specifications, luminaires for conventional lighting units shall be as follows:

Luminaires for conventional lighting units with an IES II-M-SC distribution and 200 Watt high pressure sodium lamps shall be American Electric "Series 126" with photometric distribution AE3849I, Cooper "OVD" with photometric distribution OVD2S2F, General Electric "M-400" with photometric distribution 1014, or equal as approved by the Engineer.

Payment will be made at the unit bid price for each CMS Item 625, "Luminaire, Conventional, As Per Plan (add supplemental description)" for each luminaire which shall be full compensation for all labor, materials and incidentals required to complete this item in a satisfactory and workmanlike manner.

1142-17 625, Luminaire, Post-top, As Per Plan

In addition to the requirements of ODOT's Construction and Material Specifications, luminaires for post-top lighting units used in green spaces of rest areas shall be as follows:

Luminaires shall be American Electric "Contempo Series 245/246" with photometric distribution P5236, Cooper "USA Style King" with photometric distribution USA1S55, General Electric

"PM16/PM17" with photometric distribution 6928, or equal approved by the Engineer.

Luminaire refractors may be of glass, polycarbonate, or acrylic.

Payment will be made at the unit price bid under CMS Item 625, "Luminaire, Post-Top, As Per Plan (add supplemental description)" for each luminaire which shall be full compensation for all labor, materials and incidentals required to complete this item in a satisfactory and workmanlike manner.

1142-18 625, Luminaire, Underpass, As Per Plan

In addition to the requirements of ODOT's Construction and Material Specifications, luminaires for underpass lighting units shall be as follows:

Luminaires for underpass lighting units shall be American Electric "Sidelight series 582" with photometric distribution AE2081I, Cooper "Wall Light" with photometric distribution WPK15SXX, General Electric "Versaflood II Wallighter" with photometric distribution 8578, Holophane "Wallpack II" Test with photometric distribution 33263, or equal as approved by the Engineer.

Luminaires for underpass lighting unit which are wall mounted shall be furnished with an integral fuse holder and 10-ampere fuses.

Payment will be made at the unit price bid under CMS Item 625, "Luminaire, Underpass, As Per Plan (add supplemental description)" for each luminaire which shall be full compensation for all labor, materials and incidentals required to complete this item in a satisfactory and workmanlike manner.

1142-19 625, Luminaire, Installation Only, As Per Plan

This item of work shall consist of installing a luminaire either removed from a previous location on the project site or supplied to the project site by others.

Payment shall be made at the unit price bid under CMS Item 625, "Luminaire, Installation Only, As Per Plan" for each luminaire installed which shall include all labor, materials and incidentals required to perform this item of in a satisfactory and workmanlike manner.

1142-20 Lamps

High pressure sodium lamps shall be General Electric "Lucalox," Osram Sylvania "Lumalux," Philips "Ceramalux," or equal approved by the Engineer.

1142-21 625, Re-erect Existing Light Pole, As Per Plan

This item of work shall consist of re-erecting an existing light pole removed from a previous location on the project site. The light pole will be installed on a new foundation as indicated in the plan.

Where the pole will be installed on a new foundation, new anchor bolts shall be furnished.

In addition, the existing light pole identification decal shall be removed, and a new decal for the new identification number furnished and installed.

Payment shall be made at the unit price bid under CMS Item 625, "Re-erect Existing Light Pole, As Per Plan" for each pole re-erected which shall include all labor, materials and incidentals required to complete this item in a satisfactory and workmanlike manner.

1142-22 625, Re-erect Existing Light Tower, As Per Plan

This item of work shall consist of re-erecting an existing light tower previously removed and stored by this project.

When required, additional luminaire bracket arms shall be added to the existing luminaire brackets relocated along with the necessary adjustments and additions to the luminaire wiring to enable the the luminaires to be mounted symmetrically around the luminaire mounting ring.

Where the tower will be installed on a new foundation, new anchor bolts shall be furnished.

The tower and lowering mechanism shall be cleaned and lubricated.

Any repairs and adjustments necessary to return the tower and mechanism to good operating condition shall be made.

The existing light tower identification decal shall be removed, and a new decal for the new identification number furnished and installed

Payment shall be made at the unit price bid under CMS Item 625, “Re-erect Existing Light Tower, As Per Plan” for each tower re-erected which shall include all labor, materials and incidentals required to complete this item in a satisfactory and workmanlike manner.

1142-23 Light Pole Anchor Bolts, Misc.: Set for Pilaster Mounted Light Pole

When a light pole is mounted on a pilaster on a bridge parapet or on a retaining wall, the required anchor bolts may differ in length and/or shape from those required when the pole is mounted on a cast-in-place drilled shaft foundation. The cost differential for furnishing such bolts is included herein.

In addition, there is no foundation construction item in which to include the setting of the anchor bolts. Thus, the setting of the anchor bolts into the pilaster is also part of this work.

Payment will be made at each such pole location at the unit price bid for each CMS Item 625, “Light Pole Anchor Bolts, Misc.: Set for Pilaster Mounted Light Pole” and shall be full compensation for furnishing and placing the set of anchor bolts required.

1142-24 Light Tower Foundation, As Per Plan

In lieu of the settings shown in the standard drawings, set the tops of light tower foundations, with or without maintenance platforms, to project 6 to 12 inches (152.4 to 304.8 millimeters) above finished grade or platform floor on the up-slope side of foundation. This projection shall be included in the total depth of the foundation.

1142-25 Light Pole Painting

The painting of light poles shall be a five-part process consisting of a two-part surface preparation followed by a three-coat paint system.

The contractor shall take all necessary precautions to comply with pollution laws, rules or regulations of Federal, State or local agencies. The materials and work specified can be hazardous to the health of the applicator if the manufacturer's instruction are not followed. The Contractor shall follow the data sheet and the label on the paint containers. These precautions shall include the use of respirators and eye and skin protection as specified. The Contractor shall also insure that his operations and locations will not endanger or adversely affect the public in general.

The Engineer shall be notified 24 hours prior to any cleaning or coating operations so that inspection services can be provided.

The proposed cleaning and coating operations shall be performed only when the ambient temperature is 50 degrees F or above. The two-part surface preparation system shall consist of a solvent cleaning followed by an abrasive blast cleaning.

Surface preparation shall be done under the conditions of temperature and humidity specified by the manufacturer of the epoxy-prime coat material to be applied immediately after the preparation operations.

Existing, weathered, galvanized steel shall be prepared for coating by a solvent cleaning conforming to specification SP-1 published by the Steel Structures Painting Council (SSPC) followed by a commercial blast cleaning (SSPC-SP6).

New, unweathered galvanized steel shall be prepared for coating by a solvent cleaning (SSPC-SP1) followed by a brush-off blast cleaning (SSPC-SP7).

The prime coat shall be applied before the prepared surface degrades from the prescribed standards. In every case, the surface shall be coated with epoxy prime coat on the same day as the surface preparation.

The three-coat paint system shall consist of an epoxy prime coat, an epoxy intermediate coat and a urethane top coat, with each coat being a different color.

Paint shall not be applied when the relative humidity is greater than 85 percent. Paint shall not be applied when the steel surface temperature is less that 5 degrees F above the dew point. Paint shall not be applied to wet, damp, frosted or ice-coated surfaces, nor shall it be applied during rain, fog or mist.

Before each coating is applied, it shall be mixed with an approved power mechanical mixer to a uniform consistency which shall be maintained during its application. Thinning of paint is strictly prohibited. Paint not capable of being applied as specified shall not be used.

Each coat shall be applied in a workmanlike manner as a continuous film of uniform thickness which is free of holidays, pores, runs or sags. All coats shall be applied by brush. The coating shall penetrate all joints and connections.

The prime coat shall consist of the application of one coat of an epoxy primer. The total dry film thickness of this coat shall be between 1.5 to 2.0 mils. If more than one pass is necessary to obtain the required thickness, the cost shall be borne by the Contractor. The color of this coat shall be noticeably different from the base material and other proposed coats.

The epoxy prime coat shall in all cases be applied over surfaces that were prepared earlier that same day.

The intermediate coat shall consist of the application on one coat of epoxy. The total dry film thickness of this coat shall not be less than 6 mils. If more than on pass is necessary to obtain the required thickness, that cost shall be borne by the Contractor. The color of this coat shall be light grey.

At least twenty-four hours, but no more than three days, shall elapse after the application of the epoxy prime coat and before the application of the epoxy intermediate coat. Surfaces shall in all cases be clean before the intermediate coat is applied.

The top coat shall consist of the application of one coat of urethane to support sections. The total dry film thickness of this coat shall not be less than 1.5 mils. If more than one pass is necessary to obtain the required thickness, that cost shall be borne by the Contractor. The color of this coat shall be medium grey.

At least twenty-four hours, but no more than three days, shall elapse after the application of the epoxy intermediate coat and before the application of the urethane top coat. Surfaces shall in all cases be clean before the top coat is applied.

Painted items shall be carefully handled and stored to prevent any scraping, marring or other damage to the painted surfaces. The coating materials used shall be those listed from one of the following manufacturers or equal as approved by the Engineer:

Company	Prime Coat	Intermediate Coat	Top Coat
Ameron 210 North Berry Street Brea, California 92621	Amercoat 71	Amerlock 400 (Light Grey)	Amercoat 450 HS (Medium Grey)
The Glidden Company 16651 Sprague Road Strongsville, OH 44136	GLID-Guard Corrosion Resistant HS Epoxy No. 5465	GLID-Guard Corrosion Resistant HS Epoxy No. 5466	GLID-Thane II Polyurethane 6200 Series
Porter Paint Company 400 South Thirteenth St. Louisville, KY 40201	Porter Paints MCR 4300	Porter Paints MCR 4300 (Off-White)	Porter Paints Hythane
Poly-Carb, Inc. 33095 Bainbridge Road Cleveland, OH 44139	Mark-60 Ultrapox	Mark-60 Ultrapox (Light Gray)	Mark-73 Ultrakote (Medium Gray)
Sherwin Williams Co. 761 Beta Drive Mayfield Village, OH 44143	Tile-Clad II Hi-Build Primer	Hi-Solids Catalyzed Epoxy (Pure White) (Slate Gray)	Hi-Build Aliphatic Polyurethane Enamel

All three coats of the system shall be manufactured by the same company to insure compatibility among coats.

Prior to use, the Contractor shall submit to the Director copies of the manufacturer's certified test data showing that the material complies with the requirements of this specification. The test data shall include the brand name of the paint, name of manufacturer, number of the lot tested and date of manufacture. ODOT reserves the right to sample and test delivered lots for compliance.

Payment will be made at the contract bid price for each pole painted and shall be full compensation for all labor materials and equipment required to paint the pole, bracket arm and transformer base (if used).

1142-26 Underdrains for Pull Boxes

Reference is made to the standard drawings for details of draining pull boxes. Underdrains for pull boxes shall be used as directed by the Engineer and shall be provided where the length required for a satisfactory outlet does not exceed approximately 20 feet (6.1 meters). An animal guard shall

be included at the outlet end of the drain. An estimated quantity of CMS Item 603, “4" (102 mm) Conduit, Type E” is included at each pull box for this purpose.

1142-27 625, Junction Boxes, As Per Plan

The junction box shall have an embossment in the back of the box that shall be drilled and tapped for a 1/4" - 20 cap screw for connection of grounds.

When encased in concrete, the junction box shall have inward flanged covers and may have in lieu of bossed drilled and tapped connections, slip holes field drilled to accommodate the conduits entering the box so long as each metallic conduit is equipped with a grounding bushing jumped to the box itself.

When surface mounted, the junction may have in lieu of bossed drilled and tapped connections, field installed hubs to accommodate the conduits entering the box.

1142-28 Conduit Expansion and Deflection

Expansion fittings shall be OZ Type AX, Crouse Hinds Type XJG, Appleton Type AX, or equal approved by the Engineer. Each expansion fitting shall provide either 4" or 8" total movement as specified by the plan details and shall have an external copper bonding jumper, unless specified otherwise by the plan details.

Deflection couplings shall be OZ Type DX, Crouse Hinds Type XD, Appleton Type DF, or equal approved by the Engineer. Each deflection coupling shall have an external copper bonding jumper, unless specified otherwise by the plan details.

1142-29 625, Power Service Refurbished, As Per Plan

This item of work shall consist of the removal of those portions of an existing power service not being reused and the installation of new power service components in accordance with the contract documents.

All existing lighting circuit cables and splices shall be removed from the adjacent existing pull box and from conduit between the pull box and the power service enclosure. Where existing conduit is to be reused, the conduit shall be cleaned of mud and debris. The enclosure and other related components of the power service shall be cleaned of all mud, debris and existing fuses shall be removed and discarded.

The existing control transformer, photocell and contactor coil shall be removed and shall be replaced with a new line voltage contactor coil and a new photo cell. The power service shall be wired as shown in standard drawings and as detailed in the plans.

The ground area in the vicinity of the power service shall be free of all debris, and shall have grass trimmed.

Payment will be made at the unit price bid for each CMS Item 625, “Power Service Refurbished, As Per Plan” and shall be full compensation for all labor, materials and incidentals required to complete this item in a satisfactory workmanlike manner.

1142-30 625, Power Service, As Per Plan

In addition to the requirements of the Specifications, the following is added.

The power supplying agency for this project is:

Power Company _____

Address _____

Phone # _____

Contact Name _____

The Contractor shall be responsible for any charges made by the power company for work by the company in conjunction with the establishment of the required service.

Electrical energy from existing power services shall continue to be charged to the maintaining agency. The contractor shall pay electrical energy charges for new power services established by this project. After acceptance of the lighting, the power service electrical energy account shall be transferred to the maintaining agency noted in the plans.

This shall include new power service established by this project as well as reassignment of existing service due to work performed by this project.

Payment will be made at the unit bid price for each CMS Item 625, “Power Service, As Per Plan” which shall be full compensation for all labor, materials and incidentals required to complete this item in a satisfactory and workmanlike manner.

1142-31 Special, Power Service Fence

This item of work shall consist of installing a new chain link fence, with gate, around a power service. The fence and gate shall be installed as specified in CMS 607 and in the plan. The fence shall be 8 feet in height, and one gate of 4 feet in width shall be included, except as specified herein unless detailed otherwise in the plan.

Where the power service is adjacent to the right-of-way fence and there is reasonable access to the power service from outside the highway right-of-way, the fence around the power service shall utilize the right-of-way fence line as a portion of the fence line of the enclosed area. The right-of-way portion of the fence shall include a second access gate.

The gate hasp of each gate shall be secured by a steel rod, with one end drilled for the maintaining agency padlock and the opposite end drilled for the power company padlock.

Payment will be made at the unit price bid under Item Special, “Power Service Fence" for each area fenced which shall be full compensation for all labor, materials and incidentals required to complete this item in a satisfactory and workmanlike manner.

1142-32 625, High Voltage Test

A lump sum for performing the high voltage test required by CMS 625.19.E has been included in the general summary.

1142-33 High Voltage Test Waived

The high voltage test shall not be performed on the circuits constructed by this project, since the test could damage the portion of the completed circuit which has been in service prior to this project.

1142-34 Padlocks and Keys

Padlocks furnished shall be either brass or bronze, equal to Master No. 4BKA or Wilson Bohannan 660A, and shall be keyed in accordance with CMS 631.06. Payment shall be included in the bid for the item(s) being locked.

1142-35 Special, Maintain Existing Lighting

Existing roadways which are to remain open to traffic during construction of this project and which are lighted shall have the lighting maintained as described herein.

Before any work is started in the immediate vicinity of the existing lighting circuits, representatives of ODOT, the Maintaining Agency and the Contractor shall make a visual inspection of the existing roadway lighting circuits to be maintained. During this inspection, a written record of the condition of existing lighting shall be made by ODOT's representative. This written report shall note individual luminaires which are not in working order, individual poles which are not standing, and individual circuits which are not in working order. The completed report shall be signed by the representatives of ODOT, the Maintaining Agency and the Contractor.

If, as a result of this inspection, it is determined that the condition of the existing system is below that required for the safety of the traveling public, then the Maintaining Agency shall make the repairs necessary to return the system to an acceptable condition. Following these repairs, the system shall again be inspected and a report shall be made and signed as outlined herein.

When the existing system is in an acceptable condition, it shall be turned over to the Contractor who shall then be required to maintain the existing lighting to the condition outlined in this report with the exception of knockdowns due to traffic accidents.

Replacement of knocked downed units shall be done only when the Engineer has determined that the replacement of the knocked down unit is necessary and shall be paid separately on a unit basis.

Betterments shall be covered in items of work pertaining to the construction of permanent improvement.

When the sequence of construction activities requires, or should the Contractor desire, the removal of the existing lighting before the new lighting is operational, the Contractor shall be responsible for providing temporary lighting of this portion of the roadway.

Prior to installing such lighting, the Contractor shall prepare and submit four sets of the temporary lighting plan to the Engineer for review and approval.

This plan shall show locations of poles, lengths of bracket arms, styles of luminaires, mounting heights, wiring methods and other pertinent information. The temporary lighting shall provide an average initial intensity of 1.2 footcandles with an average to minimum uniformity not to exceed 3:1. Mounting height of temporary luminaires shall not be less than 30 feet (9 meters), and the minimum overhead conductor clearance shall be 20 feet (6 meters). Temporary overhead construction shall not be less than Grade "A" for strength requirements as defined by the National Electric Safety Code. Wood poles with overhead wiring may be used. However, temporary lighting shall meet Federal and State safety criteria. If breakaway poles are used to meet these criteria, then underground wiring shall be used. Reconditioned or used materials may be furnished for temporary lighting.

All materials necessary to complete the temporary lighting shall be furnished and installed by the Contractor. When no longer needed, the temporary lighting installation shall be removed and

properly disposed of by the Contractor.

The Maintaining Agency will pay for electrical energy consumed by existing power services and by proposed permanent power services after acceptance of the lighting work. The Contractor will pay for electrical energy, installation, removal and maintenance of any temporary power services.

The lump sum price bid for Item Special "Maintain Existing Lighting" shall include payment for all labor, equipment, materials and incidentals necessary to maintain the existing lighting as specified herein.

The unit price bid for Item Special "Replacement of Existing Lighting Unit" shall be full payment for the replacement of an existing lighting unit which has been knocked down after the aforementioned inspection and shall include all labor, equipment, materials and incidentals necessary to provide a replacement for such unit.

1143 SPECIFICATIONS

ODOT specifications for the furnishing and installation of highway lighting equipment are contained in **CMS Item 625** and **CMS 725**.

Intentionally blank.

1150 CONSTRUCTION

1150-1 General

Electrical construction work must adhere to the contract documents, which commonly include proposal notes, project plans, **Construction and Material Specifications (CMS)**, applicable electrical codes and industry standards.

The following information does not alter or supersede the contract documents, but should be considered as a guide for those involved.

1150-2 Design Ambiguities, Plan Errors, Consultation with Designer

When questions are raised regarding project plans and specifications, the project inspector or engineer should address the issue by following these steps.

1. Define the discrepancy or error.

2. Determine if the problem affects other portions of the project construction or is localized to the problem area.

3. Identify a standard or specification which could be used to guide the resolution of the problem.

4. Evaluate potential solutions for safety implications. The National Electric Safety Code should be referenced for most outside electrical work issues.

5. Consider the impact of potential solutions on the maintenance of the facility. Will the resolution create a non-standard installation?

If the issue affects other portions of the project, the **ODOT** project management team should consult the designer to ensure the project will meet the performance goals of the lighting system. The designer should also be consulted if the intent of the plan is unclear. Plan discrepancies that involve site conditions can usually be resolved without involving the designer. If the designer is unavailable, someone with extensive knowledge of ODOT lighting standards and electrical systems should be consulted.

1150-3 Respect for the Contractor

ODOT contractors are prequalified for specialized work types. They bring expertise to the project and an independent perspective from the project management team. As the contractor reviews plans and specifications, he wants to ensure that he can install material that will ultimately operate as the designer intended. The contractor relies on inspectors and engineers to approve materials and work plans to guide the project installation and ensure that he will be paid for work completed.

1150-4 Pre-Construction Procedures

The first requirement of the contractor is to notify all utilities before construction work begins. Names and addresses of these utilities are given in the project plans. It is also the contractor's responsibility to contact the Ohio Utility Protection Services (OUPS) (1-800-362-2764) to have utility locations marked in all areas where digging is involved.

1150-5 Supplemental Documents

1150-5.1 General

Supplemental documents are used to verify that the material installed meets the minimum criteria established by **ODOT**. Highway lighting items are found in **CMS Item 625**. **CMS 725** contains detailed descriptions of acceptable materials.

In general, all materials furnished shall be new and of first quality (unless otherwise noted in the plans) and shall be identified by either a permanently attached nameplate or by an indelible marking. Before any construction work begins all material shall be checked to determine if catalog numbers and dimensions correspond with those shown on approved certified drawings. Any material deviations from that already submitted will not be permitted to be used until a new catalog cut is submitted and approved. Whenever practical, like items of electrical equipment shall consist of products of the same manufacturer.

No materials furnished shall contain Polychlorinated Biphenyls (PCBs). Transformers, ballasts and capacitors shall be marked “No PCBs” in accordance with Federal Environmental Protection Agency regulations.

The following four material certification procedures are commonly used to ensure approved materials are installed.

1150-5.2 Certified Drawings

The contractor should not order any items before material submittals have been reviewed. As required for **ODOT** records, the contractor shall submit two copies of shop drawings or catalog cuts prior to their installation. These submittals ensure that: the material to be installed on the job meets minimum criteria; **ODOT** has records of the material installed; and, if necessary, an identical piece of equipment can be purchased to match material installed on the project.

Each submittal shall identify the project and bid reference number under which the item is being installed and clearly mark each item by circling or underlining the material to be installed. If a given item is listed under multiple bid item reference numbers, separate and complete documentation packages shall be made for each bid item. If multiple items are incorporated under a single bid reference number, all interdependent items shall be submitted together. The contractor’s cover letter shall certify that each manufactured item conforms to all contract requirements for that item.

It should be noted that the submittal of certified drawings does not relieve the contractor from furnishing, when requested, additional catalog information for materials as deemed necessary for the project.

The following lighting items **(CMS Item 625)** require certified drawings or catalog cuts:

- Luminaires
- Luminaire Supports (Towers, Lowering Devices, Poles, Bracket Arms)
- Power Service Equipment
- Portable Power Units
- Temporary Lighting Systems

1150-2.2 TE-24 Material Certification

The **ODOT** Plant Sampling and Testing Plan (TE-24 system) is administered by the **Office of Materials Management**. This system was designed for materials to be sampled, tested, approved and stocked for future use on **ODOT** projects. Materials are inspected at the manufacturing or

distribution site. Each approved lot of material is assigned a TE-24 certification number. The TE number can be transferred directly to an **ODOT** project or it can be transferred to other warehouses, such as a contractor's storage facility, then transferred to a project at a later date.

TE-24 certification is available for the following electrical items **(CMS Item 625)**:

- Pull Boxes
- Junction Boxes
- Anchor Bolts

1150-5.4 Qualified Products List

In 2002, the **Office of Materials Management** instituted a program for handling certain materials with a Qualified Products List (QPL). Items included on the QPL will not require a TE-24 being sent with the material to the project. QPL materials should have a direct, easy means of identification that mark the material and link it with the manufacturing company. Acceptance of QPL items will be at the **ODOT** project level. **ODOT** project personnel will automatically verify pre-approval on the QPL list through **ODOT's** computer construction management system.

Qualified Products Lists include the following electrical items **(CMS Item 625)**. For a current list of approved products, contact the **Office of Materials Management**.

- Conduit
- Wire and Cable
- Plastic Pull Boxes
- Junction Boxes
- Ground Rods
- Photocells

1150-5.5 Visual Inspection

Material which does not require shop drawings typically requires other certification that it meets **ODOT** criteria. However, some material does not require any special supporting paperwork. The following items are normally manufactured to standards that meet **ODOT** criteria and do not require special documentation. Visual inspection of these items may be used to verify their compliance.

- Exothermic Welds
- Insulating Varnish
- Split Bolt Connector
- Expansion Fittings
- Connector Kits
- Splice Kits
- Copper Crimps and Compression Connectors
- Light Pole Decals
- Circuit Identification Tags
- Cable Grips
- Wood Service Poles
- Fuses for Control Center and Connector Kits
- Photoelectric Cell and Bracket
- Secondary Lightning Arrestor
- Guy Anchors and Anchor Rods
- Weather Heads
- Watertight Hubs
- Remote Ballast Enclosures and Mounting Brackets

1150-6 Contractor Certifications

Only contractors prequalified by the **Office of Contracts** shall be allowed to complete electrical items of work on any project. Prequalification for Work Type 43 - Highway Lighting is required to perform electrical work on lighting.

1150-7 Luminaires

1150-7.1 General

CMS 725.11 defines a luminaire to include the direct appurtenances such as a housing, lamp, support clamp, reflector, refractor, socket, ballast and terminal block.

In all cases, prior to installing a luminaire, the ballast rating should be checked to ensure that it is compatible with the circuit voltage, and that the lamp wattage and distribution type is as specified in the plans.

Light distribution is normally factory preset to customer order. The settings shall be checked against the distribution stipulated in the plans, and if changes are required the instructions packed with the luminaire shall be used.

1150-7.2 Conventional Luminaire

The conventional luminaire used by **ODOT** is an “ovate” or “Cobra Head” type fixture with a domed glass lens. The socket setting shall be checked to ensure that it is correct and will produce the I.E.S. distribution type shown on the plans. The socket setting shall also be checked for compliance with the instruction sheet packed with each luminaire.

After installation of the luminaire, the luminaire shall be checked to ensure that it is properly leveled according to the instructions packed with it.

1150-7.3 Side-Mount Roadway Luminaire

This luminaire is usually set back from the edge of pavement. All luminaires are the same except for the size of the lamp.

1150-7.4 High-Mast Luminaire

Caution shall be taken to ensure that the correct style tower lighting luminaire is installed as designated in the plans. The three types of tower luminaires are:

- Long and Narrow (L&N) or Asymmetric Type I,
- Asymmetric or Asymmetric Type II or III, and
- Symmetric or Symmetric Type V.

When installing the asymmetrical type luminaires, a check shall be made to determine that the glass refractors are properly oriented. Symmetrical luminaire refractors have a circular distribution which doesn’t require orientation.

1150-7.5 Low-Mast Luminaire

Low-mast luminaires are installed on median barrier wall with L&N Type I asymmetric luminaires or omni-directional fixtures at approximately 50-foot (15.25-meter) height. The fixture assembly should be uniformly installed when viewed from the major route.

1150-7.6 Underpass Luminaire

1150-7.6.1 General

Underpass luminaires, whether post top or wall mounted, shall have the glass refractor protected by a wire guard or shield. A 6 x 6 x 4 inch (150x150x100 millimeter) junction box is typically provided near each fixture for pulling wire.

The designer shall choose between the following four mounting techniques based on light location relative to the bridge pier or abutment and the height of the structure.

1150-7.6.2 Wall Mount

Wall mount underpass luminaires are standard wall pack fixtures attached to the structure.

1150-7.6.3 Pendant Mount

Pendant mount fixtures are installed by using a 11/4-inch (32-millimeter) drop pipe to suspend the fixture below the structure to provide the desired lighting height.

1150-7.6.4 Post Mount

Post-top mounting of an underpass luminaire takes place between two structures. The fixture is coupled to the ground-mounted or median-mounted post with a slipfitter. Pole style is shown on **SCD HL-10.11**.

1150-7.6.5 Ceiling Mount

Ceiling mount underpass luminaires are attached to the underside of the bridge structure. Flourescent fixtures are typically ceiling mounted.

1150-7.7 Post-Top Luminaire

Post-top luminaires are used in rest areas, picnic areas and other off-road lighting applications. These luminaires are installed on poles with breakaway transformer bases as shown in **SCD HL-10.11**.

1150-8 Lamps

Lamp type and wattage should be checked for compatibility with ballast. Lamp installation should ensure full contact of the base with the socket.

The 150 watt HPS lamps shall be checked to determine that they are of the 100 volt design meeting the requirements of ANSI-S-56. The electrical characteristic for the S56 type ballast requires a 100 volt lamp and is not electrically interchangeable with 55 volt lamps.

The small Style A luminaire shall use 70 watt and 100 watt HPS lamps.

The medium Style B luminaire shall use 150, 200, 250, 310 or 400 watt HPS lamps.

The large Style C luminaire is no longer used in new installations due to improved lighting efficiencies in smaller housings. This size is only used for 1000 watt mercury vapor lamps.

1150-9 Supports

1150-9.1 Pre-Assembly Inspection of Poles

1150-9.1.1 General

Poles should be inspected when received, if possible, or prior to erection. General dimensions should be checked, including pole length, support height, base diameter, top diameter and wall thickness. Wall thickness is most easily measured with calipers at the top end of the pole. The bracket arm length and style, and the base plate dimensions, including thickness, bolt circle diameter and bolt hole size, should be checked.

1150-9.1.2 Inspection of Galvanizing on Poles

The galvanizing on poles shall be inspected visually as soon as possible following delivery. The galvanizing should be inspected externally and internally for flaws and imperfections in daylight or strong artificial light. Poles are to be loaded, transported, unloaded, stored and erected in a manner avoiding damage to the galvanizing. Supports stored in the field should be kept off the ground to prevent the galvanizing from contacting water which may result in a premature oxidation condition. The galvanizing should have the appearance of a uniform application. Poles should be checked for assurance that the following flaws or imperfections do not exist.

- Loose or bare spots in the galvanizing where improper preparation has prevented metal adherence in the molten zinc bath. Poles shall be rejected if the point of a penknife can flake off the galvanizing layer.
- General overall roughness, a symptom of over pickling or of excess zinc bath temperature and/or immersion time.
- Pimples, due to entrapped bath scum particles.
- Blisters, due to hydrogen gas absorbed during pickling and rupturing at the time of galvanizing.
- Flux inclusions, picked up from the top of the bath when dipping and burnt-on during immersion.
- Ash, usually in coarse lumps picked up from the top of the bath.
- Patches of dull gray coating due to the slow cooling of heavier cross sections of supports after immersion.
- Excess zinc lumps or runs due to delayed molten metal run-off from surface discontinuities such as joints, seams or holes.
- Rust stains due to the weeping of impurities from the pickling process at seams and folds.

Excessive galvanizing faults and imperfections or general poor workmanship may be cause for rejection of the support. Gross imperfections may lead to the suspicion of inadequate protective cover and may require inspection with a magnetic instrument. Minor scratches in

galvanized surfaces may be accepted.

1150-9.1.3 Inspection of Welds on Poles

All welds on poles should be inspected visually as soon as possible following delivery. Inspection for flaws and imperfections shall be under good lighting conditions using a magnifying glass as necessary. Evidence of any of the following faults or other imperfections such as warping and misalignment may be cause for rejection of the pole. The following features of welds should be checked.

- Check for the actual presence of all welds called for by the certified drawings.
- Welds on tapered tubes shall be continuous.
- Welds shall not exhibit cracks or discontinuities in base metal or weld material and shall not indicate evidence of porosity, showing up as pitting or pinholes.
- Welds shall be full cross section without excessive concavity or convexity. Weld terminations shall be filled to full section without depressions or craters.
- There shall be no evidence of undercut, a condition where a shallow groove is melted into the base metal adjacent to a weld and left unfilled by weld metal.
- Base plates shall be welded to two-ply poles with AWS pre-qualified welds in conformance with **CMS 725.01**.
- Arm attachment plates shall be welded inside and outside with fillet welds. Each fillet weld shall be equal to the wall thickness of the respective tubing.
- Pole shafts shall not have more than two longitudinal welds in any one section.

1150-9.2 Assembly of Supports

When steel poles are used with aluminum transformer bases, both the bottom of the pole anchor base and the top of the transformer base shall be painted with a zinc rich paint meeting Federal **Specification TT-P-641-Type II**.

Prior to installation, anchor bolts shall be checked to determine if nuts can easily be turned on the threads by hand.

Handhole covers for light poles and transformer base covers shall immediately be applied after erection of the pole. A light amount of anti-seize or grease lubricant shall be applied to all screws for handholes covers, splice box covers and bolts for transformer base doors.

Light poles shall be plumbed after erection. Shims for the purpose of leveling are supplied by the pole manufacturer. Some contractors will install the transformer base first before setting the pole, while others will attach the transformer base to the pole before erecting. Whichever the case, shimming and plumbing of the pole, shall be a final requirement.

Check that the cable grip in the light pole is properly installed as shown in **SCD HL-10.12** to prevent damage to the pole and bracket cable.

Circuit identification decals shall be located approximately 7 feet (2.1 meters) above the pole base facing the oncoming traffic. (Same location for light towers.)

1150-9.3 Tower Assembly

1150-9.3.1 General

Tower shafts typically consist of not more than four round or multi-sided tapered steel sections for shafts up to and including 100 feet (30.5 meters) in length, five sections between 101 thru 120 feet (30.8 thru 36.6 meters), and six sections over 120 feet (36.6 meters).

The pole, once received in the field, should be carefully inspected for piece marks. Lap joints shall be not less than 1 ½ times the diameter of the shaft at the joint, measured at the minimum diameter of the inner telescoping section. The sections are positioned horizontally on blocks and assembled according to manufacturer recommendations.

1150-9.3.2 Erecting Towers

Lifting and setting of a tower should be by crane with the hoist line attached at a point as far above the center of gravity of the tower as possible. Care should be taken to ensure that the pole is structurally capable of accepting stresses induced at the lifting point or points. Any hoisting must be smooth and continuous without abrupt jerks.

Poles with more than one section shall be erected by either lashing the joints securely together or by using a tethering cable secured to the base of the pole.

Do not depend on the lowering device cables to secure slip-joint type pole sections together.

The leveling nuts shall be checked to ensure that they are level before setting the tower. When the pole has been lifted, the base should be placed over the anchor bolts. The crane must support the pole until the nuts are securely placed on the anchor bolts.

Handhole doors on towers shall close with no excessive gaps. Handhole door locks, when specified, shall be provided with keys that are interchangeable with other tower handhole doors.

1150-9.3.3 Plumbing Towers

As far as practical, light towers shall be plumbed early in the morning when there is minimum heat effect from the sun and when there is no appreciable wind. The heat from the sun on one side of the pole can cause a visible bow to occur.

After the tower has been set and plumbed, the space between the top of the foundation and the bottom of the tower base plate shall NOT be grouted. A stainless steel ring may be installed around the base of the pole to keep out grass and rodents when specified.

1150-9.3.4 Lightning Protection System for Towers

Lightning protection system details are found in **SCD HL-10.31**.

The lightning ground cable shall comply with the requirement of **CMS 725.16**. No splices are permitted between the air terminal mounting bracket and the ground rod. Since this cable is installed before the tower is erected, it is important that enough cable be provided at the bottom of the tower to enable the cable to be fished through the foundation conduit. Extra cable shall also be provided when a maintenance platform is required.

A tapped hole at the base of the tower with a ½-13 (13x1.95 millimeters) galvanized bolt and washer shall be provided for attachment of equipment grounds. This nut is provided at the

base plate for connection of the jumper ground, spliced to the incoming neutral conductor.

1150-9.3.5 Tower Lowering Device

The luminaire ring assembly shall be provided with the same number of 2-inch (50-millimeter) pipe tenons as the number of luminaires specified. Luminaire rings having more tenons than luminaires will not be approved.

If centering arms are not used to prevent the ring assembly from striking the pole during the raising or lowering of the ring assembly, a sufficient quantity of non-abrasive rollers shall be mounted on the ring interior.

The winch drum shall have a cable guide or cable follower to prevent cable buildup at the drum ends. Also, a keeper shall be provided to prevent cable from fouling after cable tension has been relieved when the ring assembly is latched.

Instruction manuals supplied from the manufacturer shall be turned over to the maintaining agency after the project is completed.

1150-9.3.6 Luminaire Tenon Locations

Luminaires shall be equally spaced around ring as shown in **SCD HL-10.31**.

1150-9.3.7 Latch Mechanisms and Indicator Flags

With the luminaire mounting ring in its fully raised position, at the pole top, indicator flags shall be fully visible to indicate that the latches are locked.

1150-9.3.8 Luminaire Ring Leveling

To assure smooth operation and proper latching and unlatching of top latches of the luminaire ring assembly, the ring needs to be leveled according to manufacturer procedures. Each block requires a small slot which will enable the block to be pushed onto the hoist cable until the cable is in the center of the block. Fasteners hold the blocks in position yet allow each block to slide along the hoist cables. Blocks should be located approximately 2 to 3 feet (0.6 to 0.9 meter) above the ring assembly. Carefully raise the ring until all blocks touch the latch cams. Lower the ring and accurately measure the distance from top of the ring to the bottom of each block. Adjust each hoist cable until the distance between the block and the top of the ring is equal. Raise and lower the ring several times to verify that the ring is still level.

1150-10 Foundations

1150-10.1 General

Before excavation, foundation locations shall be checked to determine if they are in conflict with existing overhead and underground utilities. The designer should be consulted prior to relocating any support more than 10 feet (3.0 meters) to resolve a conflict or if two or more adjacent supports need to be relocated.

All foundation locations shall be staked. **Ohio Utility Protection Service (OUPS)** and all utilities in the area should be allowed at least forty-eight hours to mark their utility locations relative to the proposed foundation.

Anchor bolt settings for light poles shall be positioned so the arm of the pole will be at the specified orientation when the pole is erected. Anchor bolts should be installed in foundations using anchor

bolt setting templates. Anchor bolt projections above foundation should be checked before placing concrete.

Tops of foundations shall be finished smooth and level to enable proper plumbing of the light pole. They shall be checked for proper elevation and relationship to finish grade before placing concrete.

If a graded access drive is constructed to allow a support to be installed, consideration should be given to allowing the drive to remain for future maintenance access.

1150-10.2 Excavation

Foundations are to be placed only in undisturbed soil or compacted embankment.

If a minor cave-in should occur, the contractor may, with the approval of the Engineer, continue excavating using sleeving or casing. When bedrock is encountered, the Engineer may reduce the specified foundation depth.

If construction crews must leave the job site with a hole unfilled, it shall be covered and marked with cones, barrels or warning tape.

1150-10.3 Placement of Concrete

Prior to the placement of concrete, anchor bolts and conduit ells shall be checked for size, type, number and orientation. Reinforcing bars, tie loops and tie bars shall be of the correct size, and arranged with the anchor bolts into cages according to **SCD HL-20.11 thru HL-20.21**. Cages may be wired or welded together.

Anchor bolts shall be vertical with their ends projecting the correct distance above the foundation surface in compliance with the plans. When the distance the anchor bolts project above the foundation surface is not specified, a rule of thumb is four times the bolt diameter. The anchor bolts shall be tied to the cage tie bars according to standard details.

The cage shall be supported 3 inches (75 millimeters) above the bottom of the excavation by a piece of concrete block or similar material and be positioned with a clearance of 3 inches (75 millimeters) from the excavation wall by similar blocking so that after concrete placement a full thickness cover is assured.

A template and/or frame shall be used to rigidly support the anchor bolts and conduit ells in the specified pattern during concrete placement. A form shall be oriented according to the plans to shape the foundation to a nominal depth 6 inches (150 millimeters) below ground line.

Water encountered in the foundation excavation shall be pumped out before concrete placement. If this is not feasible, concrete shall be placed by the tremi-tube method.

Concrete shall be placed and vibrated to eliminate voids. Care should be exercised during vibrating to avoid disturbing the anchor bolts, conduit ells and reinforcing cage. Depending on the depth of the foundation, a shoot may be needed to fill the hole with a uniform mix of concrete throughout the foundation.

Forms may be removed as soon as the concrete has hardened sufficiently so as not to be susceptible to damage.

1150-11 Pull Boxes

Pull boxes are to be of the specified sizes and locations shown in the plans. However, with approval of the project engineer, pull boxes in low drainage areas may be adjusted to eliminate drainage problems. Pull boxes located in sidewalks, traffic islands and curbed areas close to the roadway where wide turning vehicles could drive over them may be adjusted as directed by the project engineer to alleviate the problem.

1150-12 Junction Boxes

Junction boxes are installed at locations indicated in the plan. Bolts for cover plates should be lubricated with anti-seize or grease before being installed.

When possible, fuses should not be placed in junction boxes. They should be placed in pole bases.

1150-13 Trench

Unless approved by the Engineer, a trench shall not deviate more than 6 inches (150 millimeters) from the line designated in the plan. When a trench is cut in a rocky area, it shall be inspected, and protruding edges or rock shall be removed or smoothed. Sharp edges can puncture duct cable when compacting backfill.

Trench backfill shall be compacted in layers not to exceed 4 inches (100 millimeters) in thickness. Backfill material around duct cable shall not contain pieces larger than ½ inch (13 millimeters) within 2 inches (50 millimeters) of the duct cable. Caution tape, when specified, should be installed 6 to 8 inches (150 to 200 millimeters) below grade.

1150-14 Conduit

Conduit shall meet the contract requirements. Expansion or deflection fittings shall be provided.

After installation of conduit, the contractor shall check each conduit run by rodding (pushing a mandrel through the empty conduit) or pulling a cleaning puck through the conduit. All empty conduit installed for future use shall contain a No. 10 AWG pull wire or equivalent. Before cable is pulled through conduit, all cut ends of metallic conduit shall be reamed to remove rough edges and a bushing shall be installed. All threaded ends shall be painted with a zinc rich paint.

All metallic conduit and other items containing conductors shall be solidly bonded to assure ground continuity.

1150-15 Duct-Cable

Duct-cable shall not be installed when the temperature of the duct is below 32°F (0°C). It is permissible to install duct cable when the outdoor air temperature is actually below 32°F (0°C), but the contractor must obtain authorization from the Engineer. The contractor shall submit in writing his proposed method of heating and maintaining the duct to a temperature above 32° F (0°C) to assure a uniform temperature. The heating process shall begin a minimum of twenty-four hours prior to installation.

On days where temperatures vary widely, expansion and contraction should be considered when installing duct cable. When duct cable lengths are cut, be sure to allow for change in length due to maximum expected temperature variation where installed. The duct cable length will decrease (or increase) 1 foot per 1000 feet (0.3 meter per 300 meters) for each 10 degree F (5.6 degree C) decrease (or increase) in temperature.

To allow for the duct expansion and contraction in cold and hot weather, duct cable should extend 2

inch (50 millimeters) out of the sleeves in foundations or 3 inches (75 millimeters) out of conduits in pull boxes.

Due to reeling configuration, unreeling duct cable will result in cable lengths shorter than the duct length. Allow 25 feet (7.6 meters) cable length shortage for each 1,000 feet (300 meters) of duct to be installed. All cable shortage will occur on the starting end of each run of duct. Before installing the duct cable, calculate estimated cable shortage based on total length of run to be installed and allow this much extra duct at the starting point. Manufacturers of duct cable compensate for this allowance by supplying additional duct on the reel.

During production, the cable has been secured to the duct at the ends of each reel. Prior to burying the duct cable, end caps shall be removed and the cable shall be cut free from the conduit at both ends. This will allow the duct cable to lie flat in the trench.

Duct cable shall be laid in the trench in as straight a line as possible to prevent build-up of sidewall pressures, and therefore pulling tension, in case of cable removal and re-pulling at a later time.

Care shall be taken to protect the conductor insulation when cutting the duct. At terminal points the excess duct can be cut by slipping a short piece of electrical metallic tubing (E.M.T.) inside the duct and over the conductors past the point of desired cut. Then cut around the periphery of the duct with a hacksaw or pipe cutter. The E.M.T. will protect the conductor insulation.

Repairing damaged duct cable is covered in the ***Section 1160*** of this Manual.

Terminal points of all conduit and duct cable shall be sealed promptly after installation by means of a molded plastic or rubber boot. Heat shrink tubing caps are also permitted.

All conductors terminating in pull boxes, transformer bases and switch enclosures shall be properly identified. Identification tags shall be either brass or plastic and shall indicate “CKT” followed by the designated letter of the circuit, “GND” for all ground conductors and “NEU” for all neutral conductors.

1150-16 Distribution Cable

Distribution cable is a single conductor, stranded copper, insulated cable used in conduits to construct lighting circuits from the control equipment at the power service to the base of light poles or to the disconnect switch of towers or signs or underpass lighting.

Distribution cable shall not be spliced between terminations. Cable installed within conduit and duct cable shall be free to be pulled back and forth for a minimum length of 2 feet (0.6 meter). This test is not required when cable runs are over 500 feet (150 meters) or if the runs include more than two 90 degree bends.

All cables shall be labeled in accessible enclosures (pull boxes, hand holes, transformer base, device housing, etc.). A minimum of 5 feet (1.5 meters) of extra cable shall be provided for each conductor at all terminal points.

Each circuit requires one conductor and one separate neutral conductor. In non-metallic conduit, a separate ground wire should also be pulled in.

1150-17 Pole Wiring

Pole and bracket cable is used to connect the distribution cable to the light fixture. It typically ranges between 10-14 AWG and meets the requirements of **CMS Item 625.13 and CMS 725.02**. A reduction in cable size is necessary since lighting fixtures are typically not able to accept terminations larger than #10 wire.

Single arm luminaire poles route cable up the shaft and out the arm to the luminaire. The luminaire is fused in the pole base. When wiring twin luminaire poles with a single cable, the cable shall be routed up the shaft and out the arm to the luminaire, then directly to the second luminaire. If the arms are unequal in length, the cable shall be run out the short arm first. If the arms are equal, the cable shall be routed to the higher wattage luminaire first.

1150-18 Grounding

1150-18.1 Basic Principles

Improperly grounded electrical systems pose a serious threat to persons working on or near the facility. These grounding guidelines should be followed, while allowing site conditions to govern the actual installation.

Grounding offers protection to personnel by eliminating dangerous or excessive voltages on the non-current-carrying metal parts of an electrical installation. Grounding also protects equipment and circuit conductors from dangerous or destructive high-magnitude ground-fault currents by providing a low-impedance (AC resistance) path back to the source for such currents.

Low-impedance ground-return paths are created when a highly conductive path is made between the electric system and ground. The typical path includes a grounding wire welded to a ground rod which is installed vertically in the earth. As the moisture content of the soil increases, the conductivity of the soil increases, thus reducing the impedance.

Without this low-impedance ground-return path, an ungrounded current-carrying conductor could fault to a grounded metal or nonmetal surface, and its overcurrent protection would not trip or open, creating a shock hazard to personnel as well as damage the circuit conductors and other equipment. The time-of-response characteristic of overcurrent protection is hampered or delayed by high-impedance in an inadequate ground-return path. In other words, the lower the resistance is to the ground, the faster the response of the circuit overcurrent protection when a fault condition occurs. Mathematically, this relationship is inversely proportional.

Grounding systems protect people and equipment from generated current, induced current and static electricity by creating a permanent and continuous bonding of all the non-current-carrying metal parts of a structure or other installation. **ODOT** standard drawings provide detail on the connection of non-current carrying metal parts to ground.

1150-18.2 Ground Rods

Each ground rod must be tested to measure the earth resistance with the results reported to the project engineer. Tests must be conducted before the ground rod is welded to the support or structure. The resistance must be less than 25 ohms, or less than 10 ohms for tower lighting or traffic controllers. If the resistance is greater, then a second rod must be driven, temporarily connected to the first and retested. If the test results are still not acceptable, the project engineer will direct the contractor to install a ground grid as shown in the standard drawings.

1150-18.3 Exothermic Welds

The ground rod is joined to the grounding cable by an exothermic weld after successful testing. The weld and exposed cable are painted with two coats of insulting varnish. The contractor should follow manufacturer's instructions with attention given to the following:

- The end of the ground rod and the wire must be round, straight, clean and dry to assure a good weld.
- The weld mold is to be clean and dry before use.
- The mold is to be placed in a position which enables the cable to be in contact with the top of the rod. Use a clamp or locking pliers on the rod to keep the mold from sliding down during the welding process. Mark the conductor at the mold surface so it can be verified just before ignition that the conductor has not shifted during the setup process.
- Following the welding process, allow the weld to cool to ambient temperature, clean off any residue and apply two coats of insulating varnish over welds and exposed cable.

1150-18.4 Structure Grounding

Structure grounds are installed according to the standard drawing with ground rods driven on each end of the fixed piers. When grounding cable is welded to the tops and sides of bridge beams, check that the proper exothermic weld form is being used.

1150-19 Connections

1150-19.1 General

Cable connection devices include connectors, connector kits, cable splicing kits, in-the-line type fuseholder kits and cable splicing kits. All devices shall be rated for minimum 600 volt service. Direct buried connections are not allowed unless directed by the Engineer.

1150-19.2 Connectors

Connectors applied to the conductor by means of a compression tool shall be made of high-strength copper alloy and sized for the conductors used.

1150-19.3 Connector Kits

Cable connections using connector kits shall only be used in handholes or transformer bases of light poles, and in junction boxes within bridge and median barrier structures.

Connector kits used in pole wiring shall be of a quick disconnect type.

When assembling connector kits, no sharp bends in cables shall be permitted within 8 inches (200 millimeters) of the connector kit entrance end.

Sufficient slack shall be provided in all cables to permit bringing connector kits outside of pole base through handhole of pole or door in transformer base.

Kits should be fully sealed to prevent the infiltration of water. Lubricants, provided with the kit, shall be used so the rubber boots set together snuggly to keep water away from the conductors.

1150-19.4 Cable Splicing Kits

1150-19.4.1 General

An approved poured epoxy waterproof splice kit or heat-shrinkable sleeve or wraparound pad coated with a heat-activated self-encapsulating adhesive shall be used.

1150-19.4.2 Epoxy Splice Kits

Epoxy splice kits are easily damaged by freezing temperatures encountered prior to mixing. Damaged epoxy components may sometimes be recognized if either of the components have turned or are streaked milky white.

Connections of the conductor(s) shall be made by a copper compression connector.

The plastic mold body ends shall fit slightly loose around the cable when the mold is snapped together. The mold shall be checked to determine that the splice is centered and that both seams of the mold are completely snapped together. Ends of the mold shall be taped to seal around cable.

Resin shall be mixed and poured according to manufacturer's instructions. When the resin has solidified and cooled, the splice kit shall be inspected to determine that no epoxy resin has leaked out and that there are no visible voids in the resin.

1150-19.4.3 Heat Shrinkable Splice Kits

All kits shall be designed to fit most commonly available crimped connectors. Kits shall employ a heavy-wall, heat-shrinkable outer jacketing sleeve with mastic sealing to ensure a positive moisture-proof seal.

Following appropriate cable preparation, the shrinkable tubing shall be slid to one side and the copper compression connector installed. Some heat-shrinkable splice kits use a wrap-around sleeve in lieu of tubing. Ensure stress relief compound or mastic insulation strip is applied around the connector.

Shrink tubing is heated by using the yellow tip of a torch flame or a heat gun. Heat shall be applied uniformly around the tubing, directing heat from end to end using a back and forth painting motion. Heat shall be applied until the adhesive extrudes from the ends. Some tubing has an indicator paint which will change from green to black indicating that enough heat has been applied.

1150-19.5 Sizing Conductor to Device Terminal

The manufacturer's recommendation for wire size shall be followed when connecting the distribution cable to the cable feeding the device. The cable shall be checked to ensure that it is rated for the correct voltage.

1150-20 Power Service

1150-20.1 General

Power services should be installed to conform with local utility requirements as well as the contract documents.

Before installation of the service pole, an inspection shall be made at each proposed control center

location, to determine the accessibility to the supplying utility company and for future maintenance. Control center locations, if possible, should never be located below mainline grade where possible drainage from pull boxes, etc., could flood the enclosures by hydrostatic action.

Main switch lugs shall be of an adequate size to accommodate the service entrance cable. No individual strands of the incoming conductor shall be cut to accommodate an undersized lug. This also applies to the outgoing circuit cable and neutral bar (grounding bar) lugs.

1150-20.2 Photocell

The photocell shall face north unless the Engineer directs another orientation to avoid interference from an artificial light source.

1150-20.3 Conduit

The size of the conduit shall be as indicated, unless otherwise called for by the plan. It shall be adequately secured. There shall be no cracks, scratches or dents.

1150-20.4 Meter Housing

When a meter is required by the plan, the contractor shall install the meter housing. The meter opening shall be closed with a blanking cover until the meter is installed.

1150-20.5 Lighting Contactor

There shall be no cracks, scratches or dents on the enclosure. All conduits attached to the enclosure shall be tightly secured and, where used, all locknuts shall be tight. Except for a 1/4 inch (6.4 millimeter) weep hole on bottom of the enclosure housing, all conduit attachments shall be water-proof.

With the lock removed from the disconnect handle, and the disconnect handle placed in **"ON,"** the enclosure door shall be free to open.

With the door open there shall be no loose wires (wires disconnected), dirt, moisture or other matter. All wires shall be connected securely. There shall be no exposed bare wires. All major devices shall be tightly secured. Each fuse clip shall contain a cartridge fuse sized by plan. All wire insulation shall be free of cracks, cuts, scratches and dirt. All wires routed together between devices shall be bound and lay against the back of the enclosure. No wires shall touch or interfere with any device or the door.

1150-20.6 Lightning Arrestor

There shall be a lightning arrester on the incoming service and a grounding wire from the lightning arrester to a ground rod.

1150-20.7 Grounding Wire

A grounding conductor will normally be connected to the neutral bar and said bar will normally not be insulated from the equipment enclosure.

The grounding wire shall be protected by a wood molding for a height of 2 feet (0.6 meter) above the finished grade.

Poles shall be 35 feet (10.7 meters) minimum length and be Class 4 or heavier.

1150-21 Test Procedures

1150-21.1 General

In accordance with **CMS Item 625.19**, the lighting shall meet the requirements of the following tests and shall be performed by the contractor: Ground Rod Test, Cable Continuity Test, Cable Insulation Test or High Voltage Test, 10-Day Performance Test and Luminaire Lowering Device Test.

The test results shall be witnessed by the project engineer and a record of the test results shall be documented.

The contractor shall submit a written certification that the testing equipment was last calibrated by a certified testing agency not more than 60 days prior to the date the tests are performed. This certification along with certified copies of the test results shall be furnished to the project engineer.

During the 10-day performance test, a night inspection shall be performed by the contractor and final adjustments made to level all luminaires to the satisfaction of the Engineer. The adjustments are required to eliminate excessive brightness and glare, and to obtain optimum brightness and uniformity of illumination.

Following the successful completion of a 10-day performance test, and after there has been a partial or final acceptance of the project, the contractor shall turn over to the project engineer all manuals, diagrams, instructions, guarantees and related material. The project engineer will transfer the material to the maintaining agency. For **ODOT**-maintained lighting, the material should be given to the **District Roadway Services Manager**.

Immediately after final acceptance of the project, the Engineer shall notify the maintaining agency as to the exact time and date that maintenance of the lighting facility will become that agency's responsibility.

1150-21.2 Ground Rod Test

All ground rods shall be tested by the contractor for earth resistance to ground. Testing is to be in accordance with **CMS Item 625.19(B)** except that measurement need not be made immediately after installation. Testing shall be performed before the ground wire is attached to equipment being grounded.

The quality of a ground rod installation varies greatly depending on the characteristics of the earth surrounding the rod. Clay or mud provides the best ground connection since they are dense materials and contain sufficient moisture and metallic salts to make them conductive. Sand or gravel bearing earth is less conductive.

To measure the earth resistance of a ground rod follow test equipment manufacturer's procedure.

When the earth resistance exceeds 10 ohms for tower lightning ground rods and 25 ohms for all other ground rods, the installation is unsatisfactory and the contractor is required to proceed as specified in **CMS Item 625.09**.

Warning – It should be impressed upon all test personnel that a lethal potential can exist between the station ground and a remote ground if a system fault involving the station ground occurs while ground rod tests are being made.

Safety precautions while making these tests, by wearing rubber gloves and other protective devices, is recommended. At no time should the hands or other parts of the body be allowed to

complete a path between points of possible high potential difference.

1150-21.3 Cable Continuity Test

Before the cable insulation test, high voltage tests or performance tests, the contractor shall perform a continuity test using a volt-ohm meter, or other approved instrument. Continuity tests shall be conducted on all lighting circuits with the electrical loads, power sources and all grounds disconnected.

Each circuit shall be temporarily jumped at its termination and measured for continuity to assure that no open circuits exist.

All conductors shall also be measured against every other conductor and ground to assure that no short circuits, cross circuits or other improper connections exist. No voltage shall exist between one conductor and another conductor, including grounds.

Measure for continuity to assure that no open circuits exist.

Turn function selector to resistance . A resistance of nearly zero ohms should be indicated. If a high resistance is found, the circuit is unacceptable.

1150-21.4 Cable Insulation Test (Megger Test)

Each circuit cable shall be tested by the contractor for insulation resistance measured to ground. A listing of the resistance reading for each conductor shall be included in the test results furnished to the Engineer in accordance with **CMS Item 625.19(D)**.

Cable and wire insulation can be faulty, but the imperfections can be easily overlooked, leading to eventual electrical failure of the wiring. Weakening of insulation properties may be caused by poor storage conditions and stress due to rough handling during installation. Dirt is especially troublesome, since it is an electrical conductor and can penetrate small cracks in the insulation.

Cable insulation resistance can be tested by first disconnecting the ends of each conductor to be tested so there is no chance at any voltage being present and to prevent damage to any connected equipment. especially at the control center. The conductor under test is then connected to one terminal of the Megger Tester. A ground connection is then made from the ground terminal of the Megger Tester to an established ground such as the grounded neutral of the circuit.

The meter pointer of the megger instrument (or equivalent indication) shall be adjusted to zero and the test switch activated. Test duration shall be as recommended by the instrument manufacturer.

The insulation resistance measured to ground for each conductor shall not to be less than 10 megohms. Cable or wire not meeting this reading shall be repaired or replaced.

After completion of the cable insulation test, all control center wiring shall be connected in accordance with the wiring diagram. The contractor is to demonstrate to the satisfaction of the Engineer that all circuits are continuous and operating correctly, with no shorts, crosses or unintentional grounds.

Cable Insulation Tests are not required if the project plan requires a High Voltage Test.

When testing with a Megger Tester, remember that there is a high voltage across the terminals when testing in the megohm range.

1150-21.5 High Voltage Test (Hypot Test)

The main disconnect device shall be locked in the **OFF** position. Pole and bracket cables shall be disconnected at each light pole by unplugging the connector kits. Light towers, sign lights, underpass lights and other devices fed by the circuit shall be disconnected by opening the disconnect switch.

The test shall be performed on each insulated conductor of the circuit at the control center and the results recorded and plotted.

With voltage at 0, attach high-voltage lead to the bare copper conductor to be tested and the metered return lead to insulation of conductor being tested. It may be necessary to wrap a piece of conductive tape or soft copper collar around the outer insulation where the metered lead connection is made, if the metered return clip cannot be properly attached, because of the thickness of the insulation.

It should be noted that there are three binding posts on Hypot Test Equipment that the metered return wire can be connected to. The metered return should always be connected to the metered binding post (Red). The cable insulation test can then be performed no matter which position the ground switch on the equipment is in. If the metered return is connected to the ground binding post (Silver) then the ground switch must be in the metered position. Meters on the instrument will not operate if switch is in the bypass position. Should metered return wire be attached to the bypass binding post (Black) then no readings can be obtained, because meters on the equipment will not operate, no matter which position the ground switch is in.

For safety reasons always ground the Hypot Test Equipment by attaching a ground wire to the safety ground on the equipment and then to an established earth ground.

1. Select 0-6000 voltage scale.

2. Slowly increase the voltage from 0 to 1500 volts, then to 3000 volts, and then to 4500 volts and finally to 6000 volts. At each step, hold for one minute and read the current. Record leakage current values and plot a “Leakage Versus Step Voltage Curve.”

3. Maintain the voltage at 6000 volts and hold for five minutes, taking a current reading at the end of each minute. Record leakage current values and plot a “Leakage Versus Time Curve” as an extension of the “Leakage Versus Step Voltage Curve.”

4. Return the voltage to 0 and ground the tested conductor to remove any capacitive charges.

Determine and record temperature of the air and relative humidity at the time of testing.

Faulty conductors and/or connections shall be replaced and the circuit retested until satisfactory test results are obtained.

The test results shall be considered as satisfactory if both of the following conditions are met:

- The maximum required value of 6000 volts can be obtained as provided above.

- The leakage current remains constant or gradually decreases when plotted for a period of five consecutive minutes as described above.

Faulty cable is indicated if:

- The leakage current exceeds the microamp range before reaching the maximum test voltage, or
- With the high voltage DC held steady, the leakage current increases.

1150-21.6 10-Day Performance Test

Before acceptance of the lighting system, the contractor shall furnish all personnel and equipment required to successfully operate the system for ten consecutive days without major malfunction or failure.

At least seven days prior to the beginning of the performance test, the contractor shall notify the project engineer of the starting date.

The contractor shall arrange with the utility supplying the power for purchase of the energy to conduct the performance test. All costs of personnel, equipment, electrical energy and incidentals required for performing the test shall be included in the contract unit prices for the respective items tested.

Minor failures such as lamps or ballasts shall be immediately replaced or repaired and will not cause restart of the test.

A major malfunction or failure such as a control center etc., will cause termination of the test, and after replacement or repairing of the malfunctioned or failed equipment, the beginning of a new 10-day test.

Items which have been repaired or which are replacements shall be monitored by the contractor for a period of ten days to provide assurance of their reliability.

The complete test results shall be furnished to the project engineer. The contractor shall record the beginning and ending of the test and the method and date of the correction of each fault.

The project engineer shall record the following events in the project diary: the date of the beginning of the 10-day performance test, a day-by-day record of faults as they occur during the test, and the date of the successful completion of the performance test.

1150-21.7 Luminaire Lowering Device Test

During the 10-day performance test the contractor shall demonstrate the workability of the luminaire lowering device by lowering and raising the luminaire ring assembly on each tower on two separate occasions.

Check to determine that latching and unlatching of the ring assembly is smooth and no abrupt jerking occurs.

The torque limiter on the winch drive motor shall be tested when the ring assembly is raised until the torque limiter slips at the top of the ring travel. Field adjustment of the torque limiter setting shall not be attempted. If the limiter does not properly function, the complete drive assembly shall be returned to the factory for authorized repair or replacement.

To prevent future cable problems, it will be necessary to check, by using a good flashlight or other high-power light source, the transition or clevis plate, hoisting cables and power cord to determine if they have rotated or twisted. This is due to “Constructional Stretch” of the new wire cables which

can be caused initially with the first raising of the ring assembly with the full weight of the luminaires. The twisting can be removed by hand rotation of the transition or clevis plate.

Intentionally blank.

1160 MAINTENANCE / OPERATIONS

1160-1 General

In the matter of highway lighting it is not enough to simply install the lighting and leave it exposed to the ravages of the elements. The public expects **ODOT** to protect the dollars invested in the lighting by making sure that the lighting is operable so that it can be used by those traveling the highway when natural light is inadequate.

The **District Highway Management Administrator** through the **Roadway Services Manager** is responsible for ensuring that the highway lighting units that **ODOT** is responsible for within the **District** are in proper operating order. The physical work required to fulfill this responsibility may be contracted out to other governmental entities, utility companies and private contracting companies, or performed by **ODOT** forces.

1160-2 Maintenance Process

A contact point shall be established by each **District** for receiving notification from law enforcement personnel, emergency response and maintenance units, other governmental entities, utility companies, and the traveling public of damage to, and malfunction of, highway lighting. Periodic inspection of lighting installations will also be made.

The information obtained from these notifications and inspections shall be used to document the damage or failures, and the date of discovery. Based on the nature of the damage or failure, the **District Roadway Services Manager** will ensure that the appropriate responses are made, the incident tracked until repairs have been completed, and the date of completion of repairs documented.

Each **District** shall also see that preventive maintenance is performed to forestall failures, to facilitate repairs during responses to damage and failure, and to provide proper general housekeeping of the installations.

1160-3 Determination of Responsibility

Unless transferred to another entity by a properly executed and approved agreement, the responsibility for the maintenance of, and energy for, the operation of each highway lighting unit is as shown in ***Table 1197-12***.

The responsible party may through an approved agreement or contract arrange for another party to provide materials and equipment, and to perform the actual work. However, agreements and contracts to provide materials and to perform the actual work shall not transfer the responsibility.

1160-4 Emergency Maintenance

Downed or damaged supports that could pose a danger to the traveling public shall be removed as soon as practical, either off the right-of-way or outside the clear zone as defined by the **L&D Manual Volume One**.

Exposed live wires shall be secured as soon as possible after discovery.

1160-5 Reactive Maintenance

The maintenance operations are expected to keep the number of working luminaires at a satisfactory level.

To be considered as working, a luminaire must not only be lighted but must be properly aimed. A satisfactory level is when the total number of working luminaires meets or exceeds 90 percent of the total number of luminaires for which the **District** is responsible.

1160-6 Quarterly Inspection and Report

Each **District** shall perform a quarterly inspection of all highway lighting units and sign lighting luminaires for which the **District** is responsible. This shall include the units maintained using **District** forces, as well as those maintained for the **District** by other entities such as contractors, power companies or cities. The inspection report should note the inspection date and the location of each non-working luminaire.

Based on the inspection, the percentage of non-working luminaires shall be reported to the **Office of Traffic Engineering** for monitoring of maintenance activities and efficiency analysis.

1160-7 Required Preventive Maintenance

Exposed Equipment - Each cover on a support, junction box, pull box, or piece of power service switch gear shall be secured in the closed position. Any such cover which is missing shall be replaced. Fence gates shall be secured in the closed position.

1160-8 Recommended Preventive Maintenance

Re-lamping - Sodium vapor (highway lighting) and mercury vapor (sign lighting) lamps should not remain in service longer than four years, as measured by the date code marked on the lamp at the time of installation. Metal halide vapor lamps should not remain in service longer than two years, as measured by the date code marked on the lamp at the time of installation.

Housekeeping - The following preventative maintenance measures are recommended while preforming spot maintenance work and should be performed annually on those pieces of equipment that did not receive the measures during the previous twelve months as part of spot maintenance.

1. Whenever a moving part, latch or lock is accessed it should be lubricated, if in need.

2. Whenever a threaded cover fastener is accessed, an appropriate anti-seizing agent should be applied or redistributed.

3. Damaged or missing fasteners should be repaired or replaced.

4. Debris should be removed from in and around the base of each light pole and vegetation cut back. Debris and vegetation cuttings should be properly disposed and not left piled at the site.

5. For frangible poles, adjustments to grade should be made to ensure that the pole foundation is flush with grade on the up slope side, and that the top of foundation is not below grade.

6. For non-frangible poles, adjustments to grade should be made to ensure that the top of foundation is above grade.

7. Debris should be removed from in and around each power service (and power service enclosure fence, if used) and vegetation cut back. Debris and vegetation cuttings should be properly disposed and not left piled at the site.

8. Debris should be removed from in and around each pull box and the grade adjusted whenever the pull box is opened. Debris and vegetation cuttings should be properly disposed and not left piled at the site.

9. Eroded and sunken areas adjacent to foundations, pull boxes and control sites, or over cable trenches, should be filled, seeded and covered with erosion resistant material to slow the flow of runoff and promote vegetative growth.

1160-9 Replacement Luminaires

A replacement luminaire should be of such similar photometric distribution that the intensity and uniformity of the lighting system is not unduly compromised from the installed design. In addition, the weight and effective area of the replacement luminaire shall not exceed the capacity of the support. Where the support is equipped with a mechanical device for lowering the luminaires, the luminaires shall be replaced in the quantity needed to keep the mechanism in balance if necessary.

Replacement supports shall maintain the luminaire mounting height and overhang or underhang.

1160-10 Failure Analysis

The **District** should use historical inspection reports to discover locations experiencing repeated knock downs, pull box locations with repeated cover or box damage, or other patterns of damage that may suggest mitigating actions.

1160-11 Repairing Broken Conduit and Duct Cable

1160-11.1 General

The following procedures should be followed when performing repairs on an existing electrical system.

All damaged cables shall be replaced, except when the distance between terminal points is determined to be excessive in length. In this case pulling of new cables is not recommended because the cable insulation may be damaged. The repair should be accomplished by strategically installing a new pull box to minimize the length of cable to be replaced. Cable splice kits, as specified in **CMS 725.15**, will be stored in the pull box.

No direct buried splices are allowed. No splices are allowed inside the duct since that violates the National Electric Code.

1160-11.2 Repair Damaged Duct Cable

Duct cable repair shall be accomplished by splicing the duct at the break point in one of the following methods:

1. Repair with Compression Fittings.

   After the duct break is exposed, the damaged cable shall be removed. The duct is prepared for splicing by cutting the duct square to remove the rough edges off each end of the duct. Use either a hacksaw or plastic pipe cutter. Burrs shall be removed from the cut ends and the duct cleaned of dust, dirt, etc. Two compression fittings (such as E-lock or Duraline's Comfit) and a short length of duct are needed to complete the repair. One compression fitting is placed on each cut end and the length of duct is fit between the two fittings. Test fittings to make sure duct fit is tight. Pull in new wire and complete cable connections.

2. Repair with PVC Coupling.

   PVC couplings use a standard piece of Schedule 40 PVC conduit to replace the missing section of duct cable. After the duct break is exposed, the damaged cable shall be removed.

The duct is prepared for splicing by cutting the duct square to remove the rough edges off each end of the duct. Heat shrink tubing should be placed over the PVC before the duct cable is inserted in the PVC coupling. The PVC coupling shall be sufficiently long to replace the missing section of duct. Heat shrink tubing shall extend at least 6 inches (150 millimeters) on each side of each seam. Heat shrink tubing should be heated with a heat gun or hair dryer. Applying heat with an open flame will damage the tubing and shall not be permitted.

PVC cement will not adhere to duct cable and should not be used.

1160-11.3 Repair PVC Conduit

PVC conduit shall be repaired using PVC couplings and PVC cement in the procedures normally followed during initial installation.

1160-11.4 Repair Rigid Conduit

Rigid conduit shall be repaired using rigid conduit and threadless couplings.

1160-12 Troubleshooting Lamps

1160-12.1 General

Before attempting any troubleshooting, the electrician should verify the circuit operation and path. Lock out/tag out procedures and other safety procedures for 480 volt systems should be followed and documented. The following sections outline possible causes and corrective action for various problems.

1160-12.2 Lamp Will Not Start

Possible Causes	Corrective Maintenance
Lamp loose in socket.	Screw lamp firmly into socket until good contact is make. **STOP!** Excess torque may cause lamp to shatter at neck.
Incorrect lamp.	Check and compare data on ballast or fixture name plate with lamp electrical characteristics.
Incorrect or loose wiring.	With power off, check wiring against wiring diagram; check for loose connectors and loose terminal screws; check for broken insulation. Check circuit continuity with ohm meter.
End of ballast life.	Check for charred spots and/or swollen capacitors.
Photoelectric control inoperative.	With power **ON**, cover photocell. Wait the few minutes generally required for an operative photocell to apply power to the fixture. Replace if inoperative.
Supply voltage to fixture or ballast output voltage is low.	Check supply voltage and ballast output voltage.
HPS starter circuit failure.	Check lamp on Discharge Lamp Checker or try known good lamp. Replace starter.

1160-12.3 Short Lamp Life

Possible Causes	Corrective Maintenance
Incorrect lamp.	Check and compare data on ballast or fixture nameplate with lamp electrical characteristics.
Shorted ballast.	Check electrically for a shorted ballast.
Over wattage operations.	Check ballast or fixture rating for lamp type and wattage. Check operation for correct voltage and current at socket terminals.

1160-12.4 Flickering

Possible Causes	Corrective Maintenance
Supply voltage to fixture is low.	Check both supply and ballast output voltage with lamp operating.
Incorrect ballast.	Check and compare data on ballast or fixture nameplate with lamp electrical characteristics.
High operating voltage.	Check lamp voltage at socket terminals while operating.
Low ballast output voltage.	Check ballast output and supply volts without lamp in circuit.
Variable voltage.	Use recording voltmeter to check degree and duration of voltage variation. Check to determine other electrical loads on lamp circuit. Remove lighting circuit from lines with large electrical loads.
Bad lamp.	Replace lamp.
Loose wiring.	Check wire connections.

1160-12.5 Blown Fuses

Possible Causes	Corrective Maintenance
High momentary line current at turn "**ON**."	Check ballast literature for recommended rating of circuit protective devices. Circuit protective devices should have time delay elements when used with reactor or auto-transformer ballasts.
Overloaded circuit.	Check total load on circuit; lamps and ballasts plus other connected equipment.
Shorted wires.	Locate shorted wires and repair.
Old or worn fuses.	Replace with new and correct fuses.
Lightning induced peak.	Replace fuse. Check for other damage.

1160-12.6 Lamp Light Output Low

Possible Causes	Corrective Maintenance
Lamps near end of life.	Replace lamp.
Supply voltage to fixture is low.	Check both supply and ballast output voltage with lamp operating.
Incorrect ballast	Check and compare data on ballast or fixture name plate with lamp electrical characteristics.
Low ballast voltage.	Check ballast output and supply volts without lamp in circuit.
Dirt accumulation.	Clean luminaires and lamps.
No refractor.	Install refractor.

1160-12.7 Lamp Starts Slowly

Possible Causes	Corrective Maintenance
Supply voltage to fixture is low.	Check both supply and ballast output voltage with lamp operating.
Low ballast output voltage.	Check both ballast output and supply volts without lamp in circuit.
Lamp is defective causing a hard start.	Replace lamp **IF** other system components are **OK**.

1160-12.8 Blackened Arc Tube

Possible Causes	Corrective Maintenance
Incorrect ballast.	Check and compare data on ballast or fixture name plate with lamp electrical characteristics.
Lamp life used up.	Replace lamp.
Low voltage at socket.	Check ballast for voltage.

1160-12.9 Abnormal Lamp Color Difference

Possible Causes	Corrective Maintenance
Low supply voltage.	Check supply voltage and ballast output voltages with lamp operating.
Low ballast output.	Check ballast output and supply volts without lamp in circuit.
Variation in light distribution.	Check luminaire. To test, interchange lamps between suspected and normally performing luminaires. Check refractor and glass lens.
Dirt accumulation.	Clean luminaires and lamps.
Illumination color differences.	Variations in environmental color-walls, tunnels, bridges, etc., can cause illumination-color illusions.

1160-12.10 Whole Circuit Off

Possible Causes	Corrective Maintenance
Control Center problems.	Check supply voltage and output voltage. Check fuses. Check contactor.

1160-13 Pole Replacement/Foundation Repair

1160-13.1 General

Before new poles and transformer bases are installed on existing foundations they shall be checked for the following:

1. Anchor bolt threads shall not show signs of excessive rusting that could later deteriorate to a point where they could become a safety hazard should they fail.

2. Foundation concrete does not indicate excessive deterioration whereby it is impossible for the transformer base to be properly installed and leveled.

3. Check to determine if the foundation has shifted or tilted to the extent that the pole cannot be properly plumbed.

4. Top of foundation shall not protrude above ground level on the upslope side.

5. All painted light poles shall be checked for excessive rusting. If it is determined that they are unsafe, they should be replaced with either new or used galvanized steel or aluminum poles.

6. Pull boxes extending more than 1 inch (25 millimeters) above the existing grade should be reset, flush with the existing grade level.

When a light pole falls down, the pole and foundation should be inspected and the best method for repairing the installation determined. If a material deficiency in the pole or foundation was fully or partially responsible for the failure, the materials should be examined closely for defects, corrosion and vandalism. The probable cause of the failure should be noted.

When a pole falls, the simplex weld for the bracket arm should be inspected by looking down the inside of the top of the pole to see if the impact has cracked the weld. If the weld is cracked, the pole should not be reinstalled.

1160-13.2 Anchor Bolts Sheared

Standard light pole foundations can be repaired by jack hammering out the concrete to 1 foot (0.3 meter) below grade, using threaded couplings and threaded bolt extensions on the anchor bolts, recapping the foundation (with the threaded coupling encased in concrete), and erecting a new pole/base.

It is also possible to extend the anchor bolts with a special cadweld instead of threaded couplings. The bolt extension could be welded on and the weld embedded in the new concrete. Welded extensions would be necessary if the remaining anchor bolt did not have enough thread to receive the threaded coupling. This may also be necessary if repairing a tower foundation. In the case of welding on bolts, the concrete foundation would likely need to be removed to a depth greater than 1 foot (0.3 meter) below grade.

1160-13.3 Anchor Bolt Bent

When a bolt is bent by the impact of a knockdown, it can be repaired by straightening the bolt using physical force (sledgehammer) or by heating it. Consider the location of the bolt (tension or compression side) and the amount of bending necessary when assessing if a repair is possible. If the concrete around the anchor bolt has been cracked by the impact, consider replacing the foundation.

1160-13.4 Cracked Concrete in Foundation

Most cracked foundations should be replaced with new foundations. A repair would involve removing the concrete at least 1 foot (0.3 meter) below grade and recapping the foundation.

1160-13.5 Anchor Bolt Adapter Plates

When a foundation has a unique anchor bolt configuration which is not matched by any other current pole manufacturer, the foundation can be used for a new pole by manufacturing a specialized anchor bolt adapter plate. The adapter plate would mount on the existing bolts and provide a new bolt circle (typically 15-inch (375 millimeters) bolt circle) for mounting a new pole.

1160-14 Bracket Arm Repairs

When a bracket arm falls down, the pole and arm should be inspected to determine the best method for repairing the installation. If a material deficiency in the pole or arm was fully or partially responsible for the failure, the materials should be examined closely for defects, corrosion and vandalism. The probable cause of the failure should be noted.

Replacement bracket arms should closely match the style, length and rise of the bracket arm being repaired.

Before installing a replacement arm on an existing simplex hanger, the simplex weld should be inspected by looking down the inside of the top of the pole to see if the weld is cracked. If the weld is cracked, the arm should not be installed on that hanger. Bracket-type or banding-type attachments should be used instead.

If the arm fell because the simplex bolt sheared off, but the hanger and weld are in good condition, the bolt hole can often be redrilled and a new bolt installed.

1170 OTHER CONSIDERATIONS

This area is reserved to address material that involves other considerations than have been addressed in the other sections.

1180 RESEARCH

This area is reserved for discussion of research related to highway lighting.

1195 REFERENCE RESOURCES

Various reference resources that may be useful have been noted in ***Sections 193, 194 and 195***.

Intentionally blank.

1196 FORMS INDEX (no forms at this time)

Intentionally blank.

1197 TABLES INDEX

1197-1 Suggested Data for the District System Lighting Plan

As noted in ***Section 1101***, ***Table 1197-1*** lists suggested data for use in preparing the database used to develop a **District System Lighting Plan (DSLP)**.

1197-2 Codes for Use in the District System Lighting Plan

As noted in ***Section 1101***, ***Table 1197-2*** lists codes to be used in the **DSLP**.

1197-3 Warrants for Freeway and Interchange Lighting

As noted in ***Section 1103***, ***Table 1197-3*** lists warrants for freeway and interchange highway lighting.

1197-4 Average Maintained Luminance Design Values

As noted in ***Sections 1103-4, 1106-1, 1106-2.2, 1140-3.1 and 1140-3.6.2***, ***Table 1197-4*** shows average illuminance design values.

1197-5 Nominal Mounting Height and Wattage

As noted in ***Section 1140-4.3.2***, ***Table 1197-5*** shows mounting heights with wattages.

1197-6 Typical Bracket Arm Lengths

As noted in ***Section 1140-4.3.4.2***, ***Table 1197-6*** shows typical bracket arm lengths.

1197-7 Recommended Conduit Sizes

As noted in ***Section 1140-5.5.2***, ***Table 1197-7*** shows recommended conduit sizes.

1197-8 Lighting Load Table

As noted in ***Section 1141-3.4***, ***Table 1197-8*** shows sample circuit lighting load table.

1197-9 Recommended Lateral Soil Pressures for Foundations

As noted in ***Section 1140-8***, ***Table 1197-9*** shows recommended soil pressures for foundations.

1197-10 Foundation Embedment Nomograph

As noted in ***Section 1140-8***, ***Table 1197-10*** shows for recommended depth for foundation embedment.

1197-11 Allowable Lateral Soil Resistance

As noted in ***Section 1140-8***, ***Table 1197-11*** shows allowable lateral soil resistance based on tower height.

1197-12 Determination of Responsibilities

As noted in ***Section 1160-3***, ***Table 1197-12*** shows outlines maintenance and energy responsibilities for highway lighting.

Intentionally blank.

Table 1197-1. Suggested Data for the District System Lighting Plan

Luminaires	Pole or Tower	Control Center	Circuits	Maintenance Costs
Voltage	Tower or Pole Number	Energy Account Number	Number	Energy Units Consumed
No. of Units	Height	Power Company	AWG	Lamp Life Cycle
Manufacturer	Foundation Diameter & Depth	Capacity Current & Future	Two or Three-wire	Direct Labor
Wattage	Manufacturer	Service Type		
Ballast	Lowering Device Type	Supply Voltage		
Shields	Bracket Arm Length	Voltage Drop & Circuit		
IES Distribution	Pole Base Type	Amperage		
IES Photometric #	Installation Year	Meter Type & Number		
Re-lamp Date	Control center	Latitude & Longitude		
	Circuit number	Owner or Maintaining Agency		
	Latitude & Longitude	Control Center ID Number		

Table 1197-2. Codes for Use in the District System Lighting Plan

Code	Description
B - Blue	Isolated intersections which are not part of an interchange.
G - Green	Interchanges which have partial interchange lighting.
O - Orange	Interchanges which have full interchange lighting.
P - Pink	Roadways which are not within an interchange area, but which are between interchanges or intersections which have continuous lighting.
F - Future	Unlighted locations to be lighted.
U - Upgrade	Lighted locations to received more comprehensive lighting (e.g., partial interchange to full interchange).
D - Downgrade	Lighted locations to be downgraded to less comprehensive lighting (e.g., full interchange to partial interchange).
R - Remove	Lighted locations to become unlighted.

Table 1197-3. Warrants for Freeway and Interchange Lighting

Continuous Freeway Lighting (CFL)* (only one condition need be met)	
Case CFL-1	requires 30,000 or more ADT (anticipated opening date volumes).
Case CFL-2	requires that three or more interchanges be located with an average spacing of 1.5 miles (2.4 kilometers) or less.
Case CFL-3	requires urban development along the freeway for a length of 2 miles (3.2 kilometers) or more.
Case CFL-4	requires that the ratio of night to day accidents experienced be 2:1 or greater.
Complete Interchange Lighting (CIL) (only one condition need be met)	
Case CIL-1	requires that the total ADT ramp traffic entering and leaving the freeway at the interchange in question exceeds the following: (a) 10,000 for urban interchanges (b) 8,000 for suburban interchanges (c) 5,000 for rural interchanges
Case CIL-2	requires that the ADT on the crossroad of the interchange in question exceeds the following: (a) 10,000 for urban interchanges (b) 8,000 for suburban interchanges (c) 5,000 for rural interchanges
Case CIL-3	requires that the interchange be in an urban development area having crossroads which are lighted for 0.5 mile (0.8 kilometer) or more in each direction or have large commercial or industrial development that is lighted at night.
Case CIL-4	requires that the ratio of night to day accidents experienced within the interchange limited access area be 1.5:1 or greater.
Partial Interchange Lighting (PIL) (only one condition need be met)	
Case PIL-1	requires that the total ADT ramp traffic entering and leaving the freeway at the interchange in question exceeds the following: (a) 5,000 for urban interchanges (b) 3,000 for suburban interchanges (c) 1,000 for rural interchanges
Case PIL-2	requires that the ADT for the through lanes on the freeway exceeds the following: (a) 25,000 for urban interchanges (b) 20,000 for suburban interchanges (c) 10,000 for rural interchanges
Case PIL-3	requires that the ratio of night to day accidents experienced within the interchange limited access area be between 1.25:1 and 1.5:1.

* Where there is continuous freeway lighting, there should be complete interchange lighting (CIL). If continuous freeway lighting is warranted, but not initially installed, then partial interchange lighting is considered to be justified under CFL-1 or CFL-2. With this situation, PIL-1 or PIL-2 does not have to be satisfied.

Table 1197-4. Average Maintained Luminance Design Values

Average Illuminance on the Pavement[1]			
Roadway and Walkway Classification [2]		**Foot-Candles**	**Uniformity (avg./min.)**
Freeway (including ramps) [3]		0.9	3:1
Expressway (including ramps) [3]	Commercial	1.3	3:1
	Intermediate	1.1	
	Residential	0.8	
Major [3]	Commercial	1.6	3:1
	Intermediate	1.2	
	Residential	0.8	
Collector [3]	Commercial	1.1	4:1
	Intermediate	0.8	
	Residential	0.6	
Local [3]	Commercial	0.8	6:1
	Intermediate	0.7	
	Residential	0.4	
Sidewalks	Commercial	1.3	3:1
	Intermediate	0.8	4:1
	Residential	0.4	6:1
Pedestrian Ways and Bicycle Paths [4]		2.0	3:1

Notes:

1. Based upon R3 pavement classification, i.e. asphalt road surface, rough texture, Q_0 =0.07.
2. The terms "commercial," "intermediate" and "residential" are defined in ***Section 1103-4***. See ***Section 1305*** for definitions of the other terms.
3. Adapted from **American National Standard Practice for Roadway Lighting ANSI/ES RP-8, 1983: Illuminating Engineering Society of North America.** Used by permission.
4. This assumes a separate facility. Facilities adjacent to a vehicular roadway should use the illuminance levels for that roadway.

Table 1197-5. Nominal Mounting Height and Wattage

Mounting Height (Nominal)	Luminaire Rating (Lamp Wattage)	Luminaire Type*
32.5	200	Style B
35	200	Style B
40	200	Style B
50	310	Style B

***ODOT** designation, as defined in **CMS Item 725.11**.

Table 1197-6. Typical Bracket Arm Lengths

Location	Guardrail Offset (Feet)	Pole Offset (Feet)	Bracket Arm Length (Feet)
Mainline	10	16.5	18
	12	18.5	20
Ramps	4	10.5	12*
	6	12.5	15*
	8	14.5	15*

*Shorter lengths should be considered on the inside of sharp curves, as discussed above.

Table 1197-7. Recommended Conduit Sizes

Usage	Nominal Size (ID) (inches)
Pavement Crossovers	3
Bridge and Concrete Barrier Raceways	2
Longitudinal Conduit in Shoulder Areas	3
Structure Grounding - Embedded	1 1/4
Underpass Lighting Service	1 1/4
Conduit Ells	Same as connecting conduit, or 2 1/2 minimum for duct cable
Service Pole Pull Box to First Roadway Pull Box or Lighting Unit	3 (minimum)

Table 1197-8. Lighting Load Table

Circuit N	34 - 400 W =	13,600 W	**Circuit S**	34 - 400 W =	13,600 W
Sign No. 5	2 - 175 W =	350 W		4 - 200 W =	800 W
Sign No. 7	1 - 100 W =	100 W	**U.P. Lights**	3 - 100 W =	300 W
		14,050 W	**Sign No. 3**	1 - 175 W =	175 W
			Sign No. 8	1 - 100 W =	100 W
			Sign No. 1	1 - 100 W =	100 W
			Sign No. 18	7 - 175 W =	1,225 W
					16,300 W
Circuit E	34 - 400 W =	13,600 W	**Circuit W**	28 - 400 W =	11,200 W
U.P. Lights	3 - 100 W =	300 W		5 - 200 W =	1,000 W
Sign No. 12	2 - 175 W =	350 W	**Exist. Sign No. 101**	1 - 175 W =	175 W
Sign No. 13	4 - 175 W =	700 W	**Exist. Sign No. 102**	7 - 175 W =	1,225 W
		14,950 W			13,600 W

Table 1197-9. Recommended Lateral Soil Pressures for Foundations

Recommended Lateral Soil Pressure (Pounds Per Square Foot Per Foot of Depth)	
CLASS OF MATERIAL	**Value**
Rock in Natural Beds - Limited by the Stress in the Pile	
Compact Well Graded Gravel	400
Hard Dense Clay	400
Compact Coarse Sand	350
Compact Coarse and Fine Sand	300
Medium Stiff Clay	300
Compact Fine Sand	250
Ordinary Silt	200
Sandy Clay	200
Compact Inorganic Sand and Silt Mixtures	200
Soft Clay	100
Loose Organic Sand and Silt Mixtures and Muck or Bay Mud	0

Table 1197-10. Foundation Embedment Nomograph

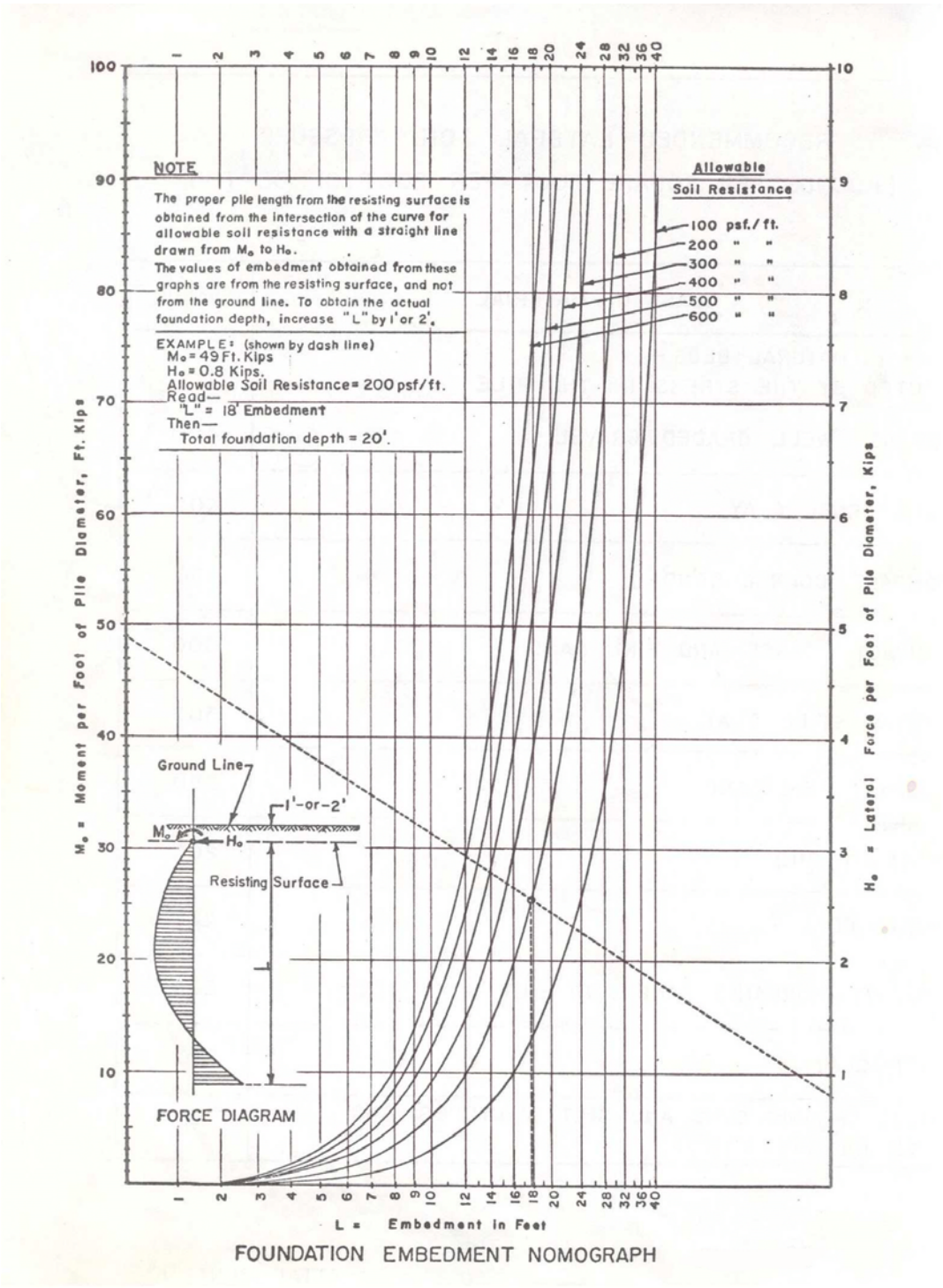

FOUNDATION EMBEDMENT NOMOGRAPH

Table 1197-11. Allowable Lateral Soil Resistance

Tower Height (Feet)	Foundation Diameter (Feet)	Allowable Lateral Soil Resistance (psf/ft. of depth)					
		100	200	300	400	500	600
		Foundation Depth (Feet)					
70	3	25	20	15	15	15	15
80	3	25	20	15	15	15	15
90	3	25	20	20	15	15	15
100	3	30	25	20	20	15	15
120	3	30	25	20	20	20	20
130	3.5	30	25	25	20	20	20
140	3.5	35	25	25	20	20	20

Table 1197-12. Highway Lighting Responsibilities

Facility	Area	
	Unincorporated	Incorporated
Interstate[1]	State	State
U.S. Route[1]	State	Municipal Corporation[2]
State Route[1]	State	Municipal Corporation[2]
County Road	County	Not applicable
Township Road	Township	Not applicable
Public Street	Not applicable	Municipal Corporation
Private Street	Street Owner	Street Owner

Notes:

1. Where the facility is of freeway design, only the mainline and ramps are considered to be part of the facility.

2. The highway lighting maintenance and energy costs shall be borne by the municipal corporation.

1198 FIGURES INDEX

1198-1 Highway Lighting Fixture Distribution

As noted in ***Section 1140-3.1***, ***Figure 1198-1*** illustrates five basic distributions of highway lighting fixtures.

1198-2 Effects of Full Cut-Off and Non Cut-Off Luminaires

As noted in ***Section 1140-3.1***, ***Figure 1198-2*** illustrates the effects of full cut-off and non cut-off luminaires.

1198-3 Typical Luminaire Placement Partial Interchange (PIL)

As noted in ***Section 1140-4.4.1***, ***Figure 1198-3*** illustrates typical luminaire placement for a partial interchange.

1198-4 Detail of Luminaire Placement for Class I Exit Terminal (PIL)

As noted in ***Section 1140-4.4.1*** and ***Figure 1198-3***, ***Figure 1198-4*** illustrates detail information regarding luminaire placement for an exit ramp terminal.

1198-5 Illustration of Partial Lighting Applications to the Basic Diamond Interchange

As noted in ***Section 1140-4.4.2***, ***Figure 1198-5*** illustrates typical luminaire placement for a basic diamond interchange.

1198-6 Partial Cloverleaf with Partial Lighting

As noted in ***Section 1140-4.4.3***, ***Figure 1198-6*** illustrates typical luminaire placement for a partial cloverleaf.

1198-7 Intersection Lighting Examples

As noted in ***Section 1140-4.4.4***, ***Figure 1198-7*** illustrates typical luminaire placement for intersections.

1198-8 Luminaire Mounting Arrangements

As noted in ***Section 1140-4.5.2***, ***Figure 1198-8*** illustrates different luminaire arrangements for street lighting.

1198-9 Overpass Key Unit Locations

As noted in ***Section 1140-4.6.3***, ***Figure 1198-9*** illustrates overpass key unit locations.

1198-10 Underpass Key Unit Locations

As noted in ***Section 1140-4.6.7***, ***Figure 1198-10*** illustrates underpass key unit locations.

1198-11 Control Center Data Chart

As noted in ***Sections 1140-5.3.2 and 1141-3.4***, ***Figure 1198-11*** illustrates a chart used in the plans to provide information needed about the control center.

1198-12 Voltage Drop Study

As noted in ***Section 1140-5.2.2***, ***Figure 1198-12*** illustrates calculation and analysis methods for producing lighting designs.

Figure 1198-1. Roadway Lighting Fixture Distribution

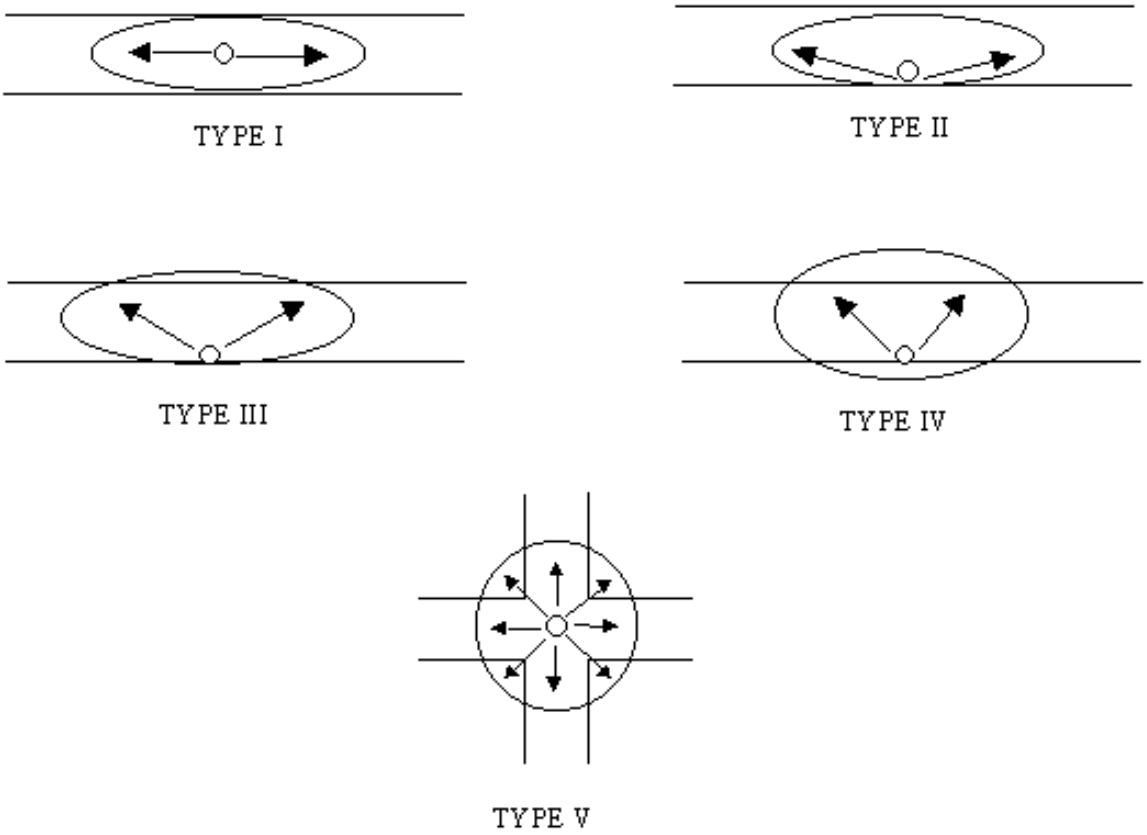

Figure 1198-2. Effects of Full Cut-Off and Non Cut-Off Luminaires

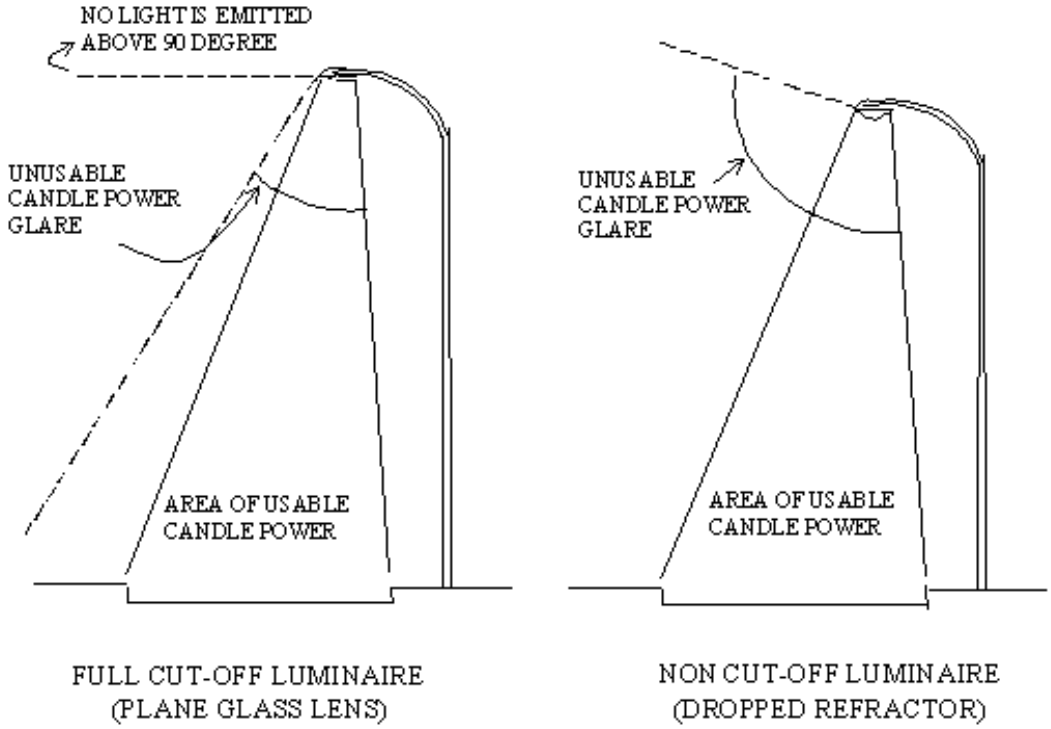

Figure 1198-3. Typical Luminaire Placement Partial Interchange Lighting (PIL)

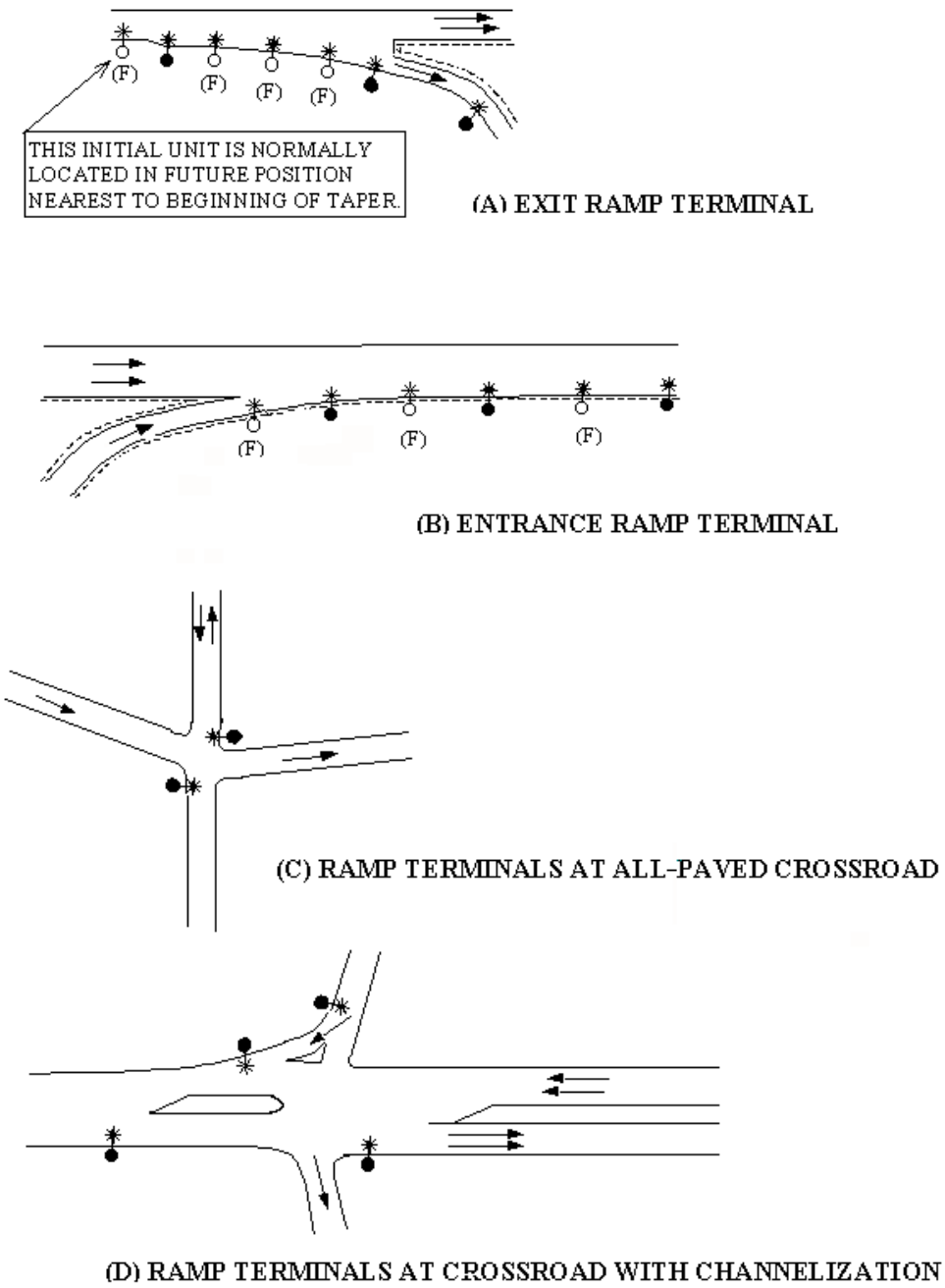

Notes:

1. For additional details of sketch (A), see ***Figure 1198-4***.
2. (F) denotes additional unit, when future/full lighting is provided.
3. Unit spacing varies with pavement width.
4. Number of units depends upon the length of the speed-change lane.

Figure 1198-4. Detail of Luminaire Placement for Class I Exit Terminal (PIL)

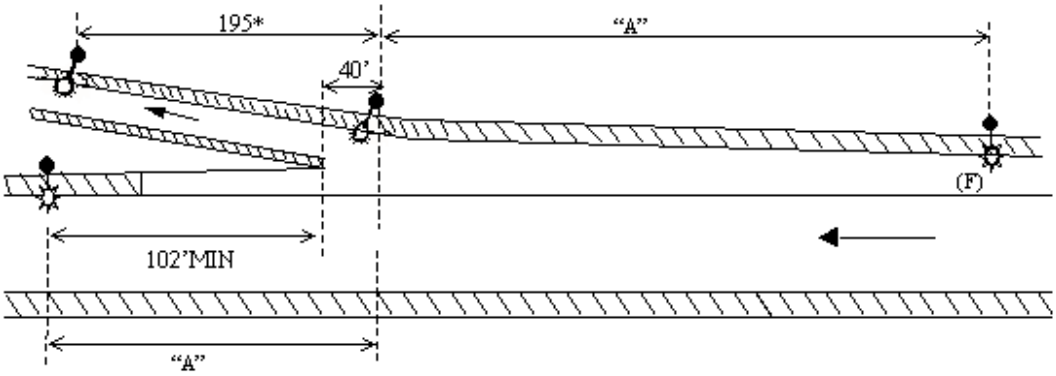

NUMBER OF DIRECTIONAL THROUGH LANES	DIMENSION "A" LUMINAIRE SIZE & MOUNTING HEIGHT	
	200 W~32.5FT	310W~40.0FT
2	142	174'
3	-	150'
4	-	142'

Notes:
1. This layout is based on an average initial intensity of 1.2 foot candles and a maximum uniformity of 4.0 to 1.0.
2. (F) denotes additional unit when future/full lighting is provided.

* This spacing may be less on a sharply curved ramp, or when the design uniformity exceeds 4.0 to 1.0.

Figure 1198-5. Partial Lighting Applications to the Basic Diamond Interchange

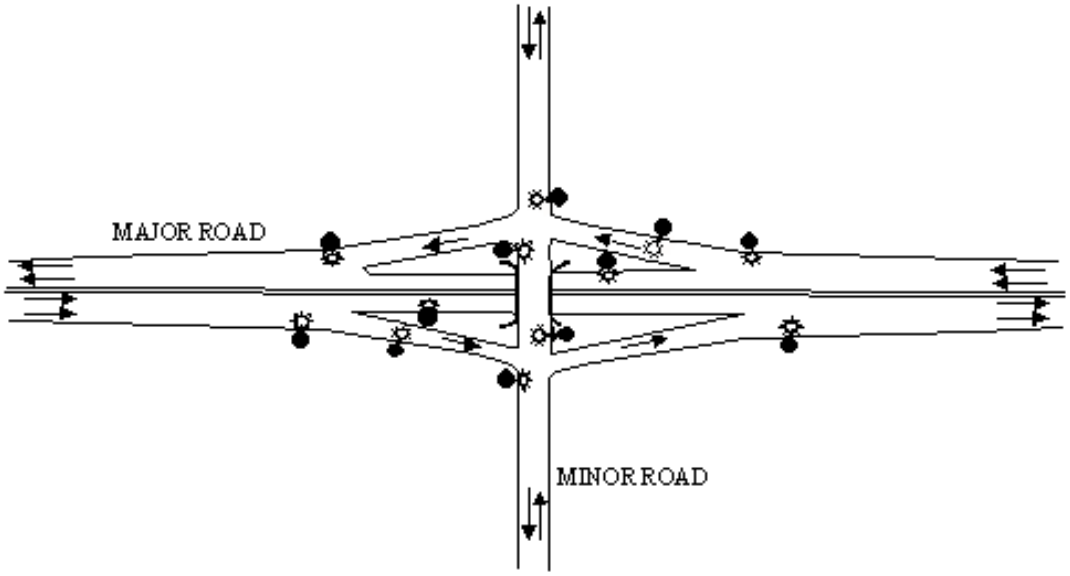

Figure 1198-6. Partial Cloverleaf with Partial Lighting

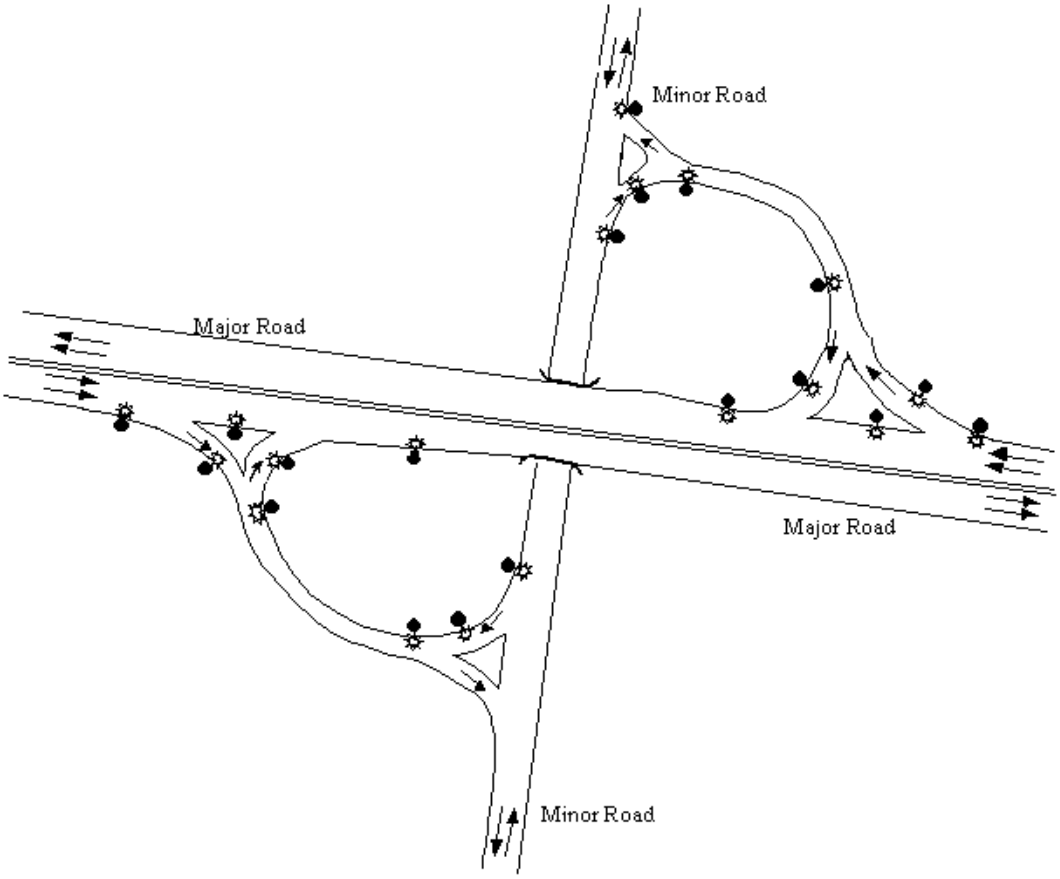

Figure 1198-7. Intersection Lighting Examples

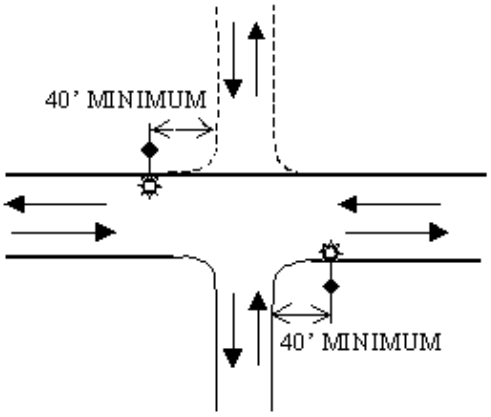

2-LANE ROADS

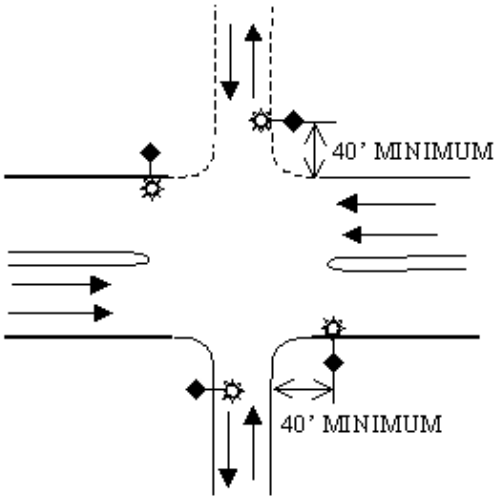

4-LANE ROADS

Figure 1198-8. Luminaire Mounting Arrangements

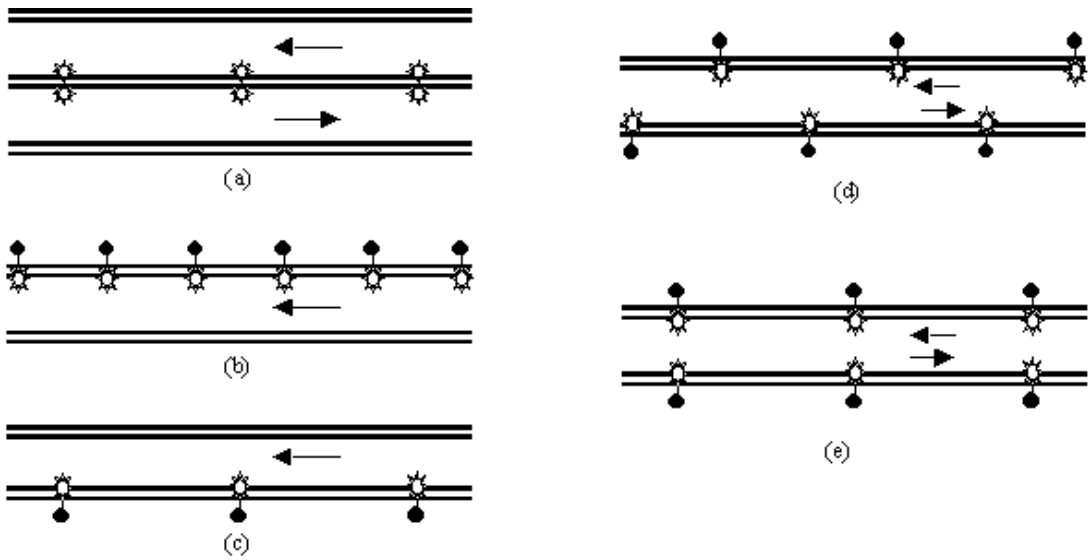

Luminaire mounting arrangements: (a) Median; (b) Right-side; (c) Left-side; (d) Staggered; and (e) Opposite.

Figure 1198-9. Overpass Key Unit Locations

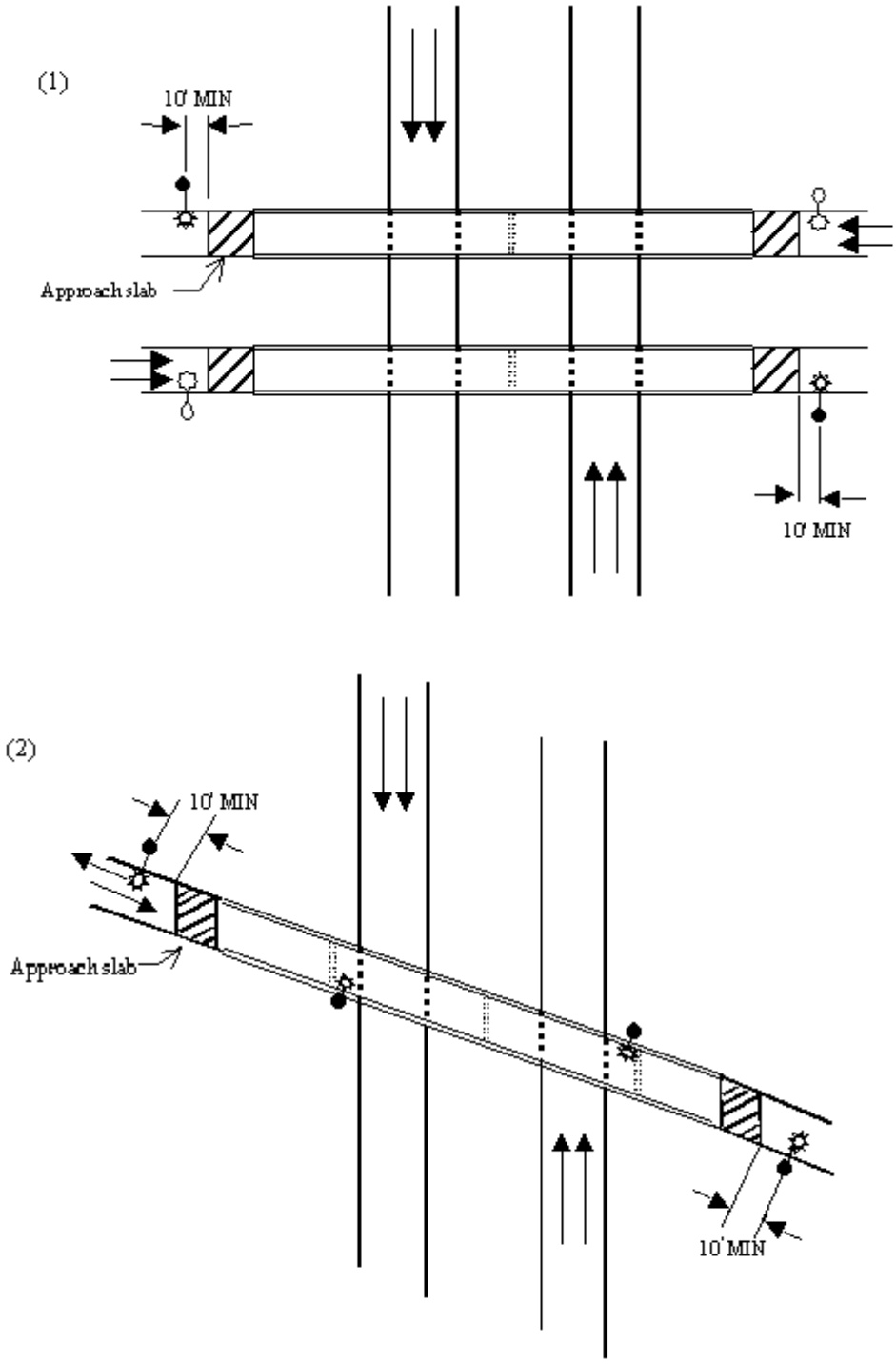

Figure 1198-10. Underpass Key Unit Locations

(1)

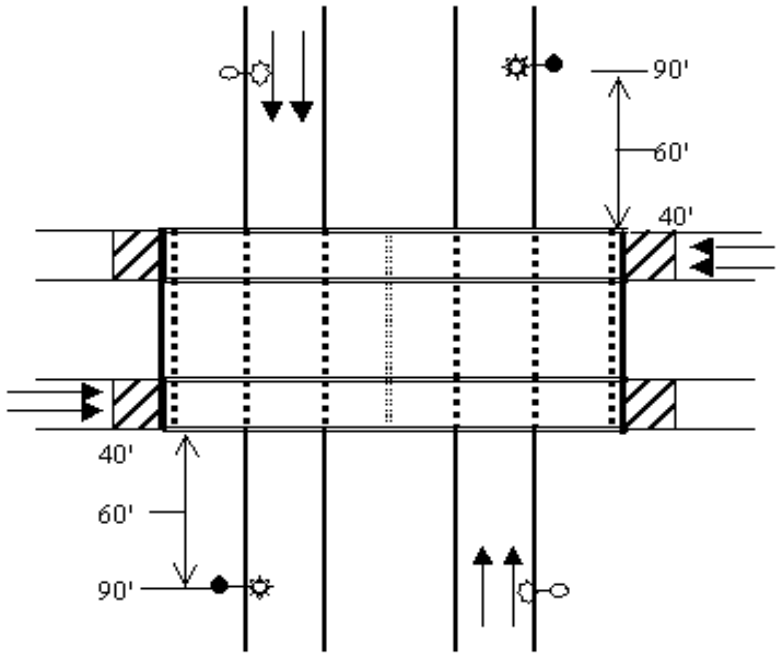

(2)

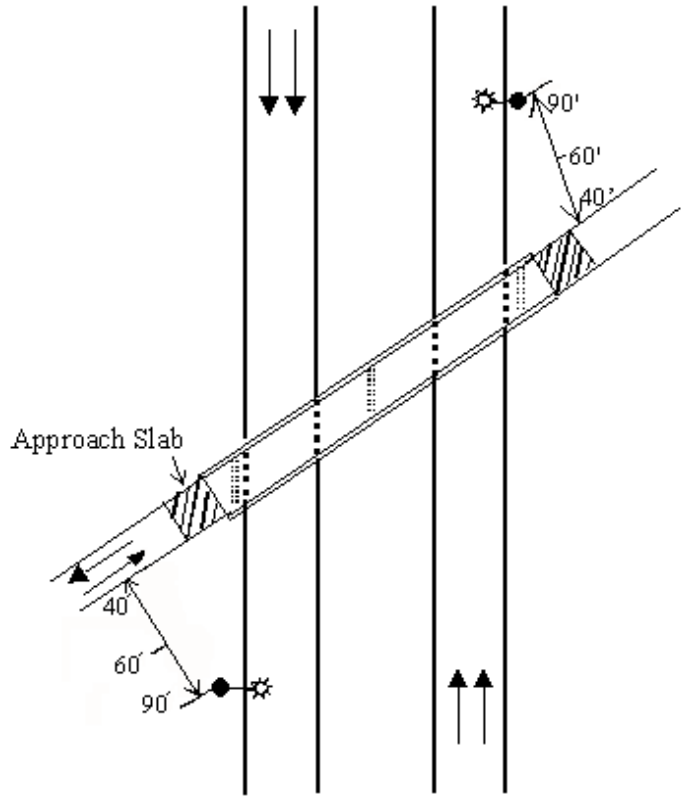

Figure 1198-11. Control Center Data Chart

CONTROL CENTER DATA									
CONTROL CENTER	LINE VOLTS	CONNECTED LOAD (KVA)	SERVICE ENTRANCE CONDUCTOR SIZE- AWG	ENCLOSURE RATING (AMPS)	CIRCUIT NO.	CIRCUIT LOAD AMPS	CIRCUIT FUSE SIZE AMPS	CIRCUIT CABLE SIZE AWG	MAINTAINING AGENCY
STA. –									
STA. –									
NOTE: FOR ADDITIONAL CONTROL CENTER DETAILS, SEE STANDARD DRAWINGS									
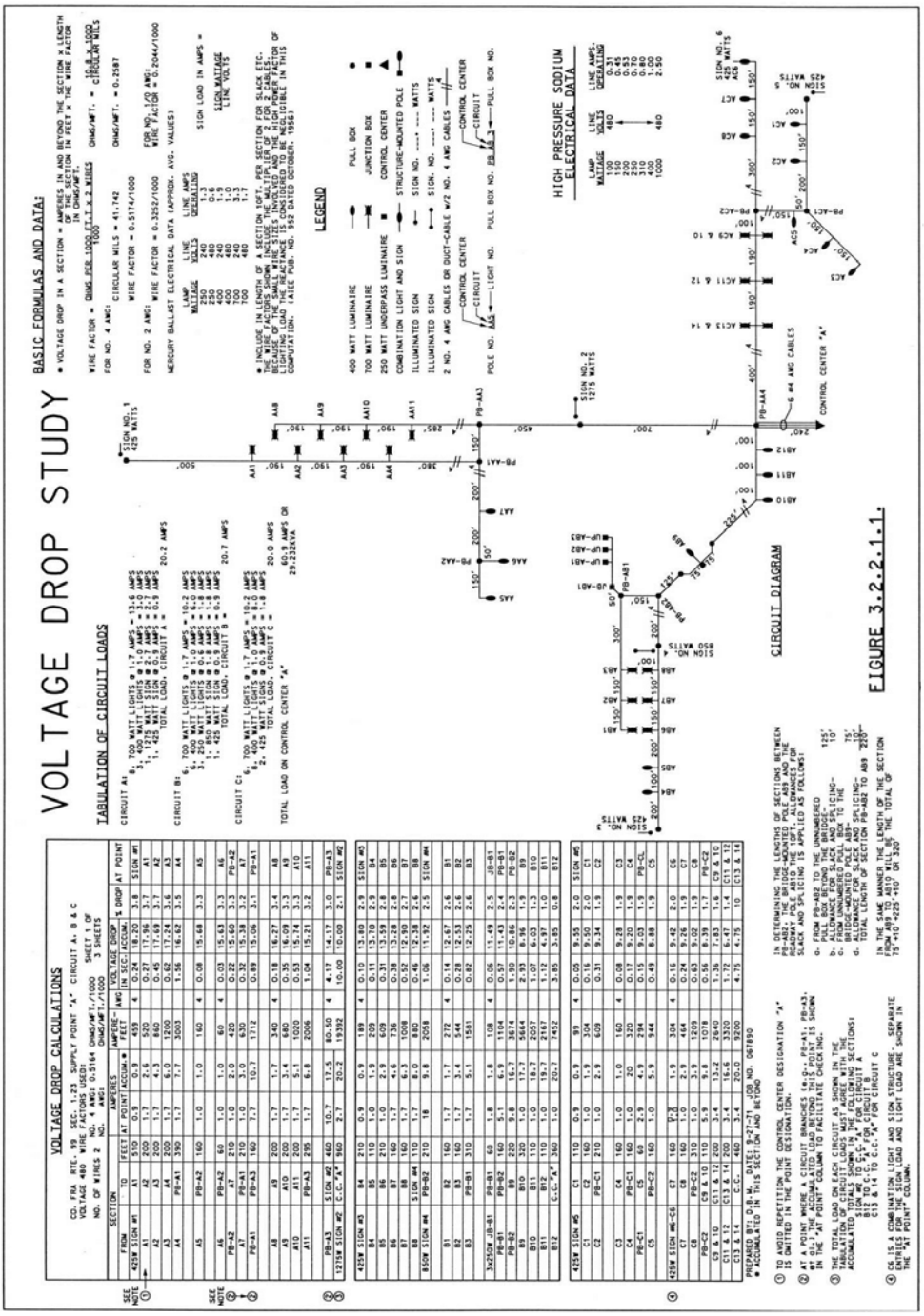
Figure 1198-12. Voltage Drop Study