TABLE OF CONTENTS
Part 4 - SIGNALS

400 GENERAL 4-7
- **400-1 Introduction 4-7**
- **400-2 Construction Projects 4-7**
- **400-3 Force Account (ODOT Operations) Work 4-7**

401 TRAFFIC CONTROL SIGNALS - GENERAL 4-9
- **401-1 General 4-9**
- **401-2 Installation of Traffic Signals on State Highways 4-9**
- **401-3 Periodic Review of Signals 4-9**
- **401-4 Removal of Traffic Signals Under ODOT Jurisdiction 4-9**
- **401-5 Identifying Maintenance Responsibility for a Traffic Signal 4-11**
- **401-6 Village Signal Permit Procedures 4-11**
- **401-7 Signal Agreements 4-12**
- **401-8 Open Architecture Traffic Signal Controllers 4-12**

402 TRAFFIC CONTROL SIGNAL NEEDS STUDIES 4-15
- **402-1 General 4-15**
- **402-2 Traffic Volumes 4-15**
- **402-3 Signal Warrant Practices and Procedures 4-15**
  - 402-3.1 General 4-15
  - 402-3.2 Warrant Nos. 1, 2, and 3 (Volumes) 4-15
  - 402-3.3 Warrant No. 5 (School Crossing) 4-16
  - 402-3.4 Warrant No. 6 (Coordinated Signal System) 4-16
  - 402-3.5 Warrant No. 7 (Crash Experience) 4-16
- **402-4 Unwarranted Existing Signalized Intersections 4-17**

403 TRAFFIC CONTROL SIGNAL FEATURES AND OPERATION 4-19
- **403-1 General 4-19**
- **403-2 Vehicle Change Interval 4-19**
- **403-3 Off-Peak Flashing Operation of Traffic Control Signals 4-19**
- **403-4 Approach Monitoring 4-20**
- **403-5 Computer-Controlled Traffic Signal Systems 4-21**
- **403-6 Priority Control Systems 4-23**
  - 403-6.1 General 4-23
  - 403-6.2 Procedures 4-24
  - 403-6.3 Preemption Emitters 4-24
  - 403-6.4 Local Maintaining Agency Policies 4-25
  - 403-6.5 Documentation 4-25
- **403-7 Protected/Permissive Left Turn Signal Face Display (Separate Head) . . 4-26**

404 PEDESTRIAN CONTROL FEATURES 4-27
- **404-1 General 4-27**
- **404-2 Push Buttons 4-27**
- **404-3 Audible Pedestrian Signals 4-27**

405 FLASHING BEACONS 4-29
- **405-1 General 4-29**

405-2 STOP Signs and Intersection Control Beacons 4-29

406 SPECIAL PURPOSE TRAFFIC CONTROL SIGNALS 4-31
406-1 General 4-31
406-2 Temporary Traffic Signals 4-31
406-3 Traffic Control Signals for Emergency Vehicle Access Guidelines 4-31

407 OTHER ELECTRICAL DEVICES 4-33
407-1 General 4-33
407-2 PREPARE TO STOP WHEN FLASHING Signs (W3-H6) 4-33
407-2.1 General 4-33
407-2.2 Applications 4-33
407-2.3 Procedure 4-33
407-2.4 Operations and Placement 4-34
407-2.5 Criteria for Removal 4-36

408 IN-ROADWAY LIGHTS 4-37
408-1 General 4-37
408-2 Use of In-Roadway Lights on State Highways 4-37

420 MATERIALS AND SIGNAL HARDWARE 4-39
420-1 General 4-39
420-2 Patented or Proprietary Materials, Specifications or Processes 4-39
420-3 Purchasing Materials for Installation and Use by Local Agencies 4-39
420-4 Vehicular Signal Heads 4-39
420-4.1 General 4-39
420-4.2 Signal Head Color 4-39
420-4.3 Signal Lens 4-39
420-4.4 Location of Five-Section Signal Heads for Protected/Permissive Turns 4-39
420-4.5 Aluminum versus Polycarbonate 4-40
420-4.6 Programmable Signal Heads 4-40
420-4.7 Signal Indications on the Stem of a T Intersection 4-40
420-4.8 Signal Head Clearance 4-41
420-5 Detector Loop Placement 4-41

421 SIGNAL SUPPORTS 4-43
421-1 General 4-43
421-2 Signal Support Inspections 4-43

430 PLANNING / PROGRAMMING 4-45

440 DESIGN INFORMATION 4-47
440-1 General 4-47
440-2 Electrical Power for Traffic Signals 4-47
440-3 Single-Arm Overhead Signal Support 4-47
440-4 Two-Arm Signal Support Design 4-49
440-5 Span Wire Signal Support Design Software 4-49
440-6 Traffic Signal Timing Analysis and Simulation Software 4-50
440-7 Stage 2 and 3 Plan Submittals 4-50

441 PLAN PREPARATION / PRODUCTION 4-53
441-1 General 4-53
441-2 Signal Plan Layout 4-53
441-3 Signal and Sign Supports 4-54
441-4 Power Service 4-54
441-5 Underground Facilities 4-55
441-6 Quantities 4-55
441-7 Bid Item Descriptions 4-55
441-8 Signal Support, Detail Design Requirements 4-55
441-9 Power Service Cable 4-56
441-10 Two-Arm Signal Supports 4-57
441-11 Guarantees 4-57
441-12 Alternate Bids 4-57

442 PLAN NOTES 4-59
442-1 General 4-59
442-2 Power Supply for Traffic Signals 4-59
442-3 625, Ground Rod, As Per Plan 4-59
442-4 632, Removal of Traffic Signal Installation 4-59
442-5 632, Interconnect Cable, Misc.: (by Size), with Support Messenger, As Per Plan 4-60
442-6 632, Loop Detector Units, by Type, As Per Plan 4-60
442-7 632, Vehicular Signal Head, Polycarbonate, by Type, As Per Plan 4-61
442-8 632, Pedestrian Signal Heads, by Type, As Per Plan 4-61
442-9 632, Loop Detector Lead-In Cable, Direct Burial 4-61
442-10 632, Combination Signal Support, Type TC-81.20 and Sign Support . . . 4-61
442-11 632, Combination Strain Pole, Type TC-81.10 and Sign Support 4-62
442-12 Strain Pole Foundation Elevations 4-62
442-13 632, Vehicular Signal Head, by Type, As Per Plan 4-62
442-14 632, Power Service, As Per Plan 4-63
442-15 Guarantee 4-63
442-16 633, Alternate Bid Item 4-64
442-17 632 Vehicular Signal Head with LED Lamp Units, By Type, As Per Plan 4-64
442-18 632 Pedestrian Signal Head with LED Lamp Units, Type A2, As Per Plan 4-65
442-19 632 Relamp Existing Signal Section with LED Lamp Unit, By Lens Type, As Per Plan 4-66
442-20 632 Controller Unit, Type 170E, with Cabinet, Type (332 or 336), As Per Plan 4-66
442-21 632 Controller Unit, Type 2070, with Cabinet, Type (332 or 336), As Per Plan 4-66
442-22 632 Controller, Master, Traffic Responsive, As Per Plan 4-67
442-23 632 Controller, Master, Traffic Responsive, As Per Plan 4-67

443 SPECIFICATIONS 4-69

450 CONSTRUCTION 4-71
450-1 General 4-71
450-2 Foundations 4-71
450-3 Electrical Appurtenances 4-71
450-3.1 General 4-71

450-3.2 Pull Boxes 4-71
450-3.3 Trench 4-71
450-3.4 Conduit 4-72
450-3.5 Ground Rod 4-72
450-3.6 Exothermic Weld 4-73
450-4 Power Service for Traffic Signals 4-74
450-4.1 General 4-74
450-4.2 Electric Meter Base 4-74
450-4.3 Conduit Riser and Weatherhead 4-74
450-4.4 Disconnect Switch 4-74
450-5 Pole and Support Inspection - General 4-74
450-6 Traffic Signal Supports 4-75
450-6.1 General 4-75
450-6.2 Strain Pole Type Support 4-75
450-6.3 Single Arm Support 4-75
450-7 Sag and Vertical Clearance 4-76
450-8 Signal Span Messenger Wire and Appurtenances 4-76
450-8.1 General 4-76
450-8.2 Signal Messenger Wire and Cable 4-76
450-8.3 Messenger Wire Served Ends 4-77
450-8.4 Preformed Guy Grips 4-78
450-8.5 Cable and Wire 4-78
450-8.6 Lashing of Overhead Cable 4-80
450-8.7 Cable Support Assemblies 4-80
450-8.8 Aerial Interconnect Cable 4-81
450-9 Method of Measurement for Cable and Wire 4-82
450-10 Signal Equipment and Wiring 4-82
450-10.1 General 4-82
450-10.2 Controller Cabinet 4-82
450-10.3 Cable and Wire Identification 4-85
450-10.4 Vehicular Signal Heads and Wiring 4-85
450-10.5 Optically Programmed Signal Heads 4-87
450-10.6 Pedestrian Signal Heads 4-88
450-10.7 Loop Detector Slot and Wire 4-89
450-10.8 Loop Detector Lead-In Cable 4-90
450-10.9 Magnetometer Probes and Lead-In 4-91
450-10.10 Use of Pachometer Instrument 4-92
450-11 Signal Performance Tests and System Checks 4-92
450-11.1 General 4-92
450-11.2 Ground Rod Test 4-92
450-11.3 Short-Circuit Test 4-93
450-11.4 Circuit Continuity Test 4-94
450-11.5 Cable Insulation Test (Megger Test) 4-94
450-11.6 Functional Test 4-95
450-11.7 Ten-Day Performance Test 4-96
450-11.8 Final Signal Installation Check 4-97

460 MAINTENANCE / OPERATIONS 4-99
460-1 General 4-99
460-2 Responsibilities 4-99
460-3 Preventive Maintenance 4-100
460-3.1 General 4-100
460-3.2 Traffic Control Signals and Intersection Control Beacons 4-100

460-3.3 Other Electrical Traffic Control Devices 4-100
460-3.4 Signal Support Inspection 4-101
460-4 As Required Maintenance 4-101
460-5 Malfunction Response 4-101
460-6 Record Retention 4-102
460-7 Training 4-102
460-8 Organizational Performance Index (OPI) 4-102
460-9 Signal Databases 4-103
460-9.1 General 4-103
460-9.2 Traffic Signal Maintenance 4-103
460-9.3 Traffic Signal Inventory 4-103
460-10 Signal Inspection Items 4-103

470 OTHER CONSIDERATIONS 4-105

480 RESEARCH 4-105

495 REFERENCE RESOURCES 4-107
495-1 General 4-107
495-2 Traffic Signal Maintenance Inspection Manual 4-107

496 FORMS INDEX 4-109
Form 496-1. Signal Support Inspection Form 4-111
Form 496-2. Traffic Signal Stage 3 Check List 4-112
Form 496-3. Traffic Signal Controller Timing Chart for Actuated Signals 4-114
Form 496-4. Traffic Signal Detector Chart 4-115
Form 496-5. Coordination Timing Chart 4-116
Form 496-6. Report of Electrical Tests 4-117
Form 496-7. Signal Inspection Form 4-119
Form 496-8. Application to Install and Operate a Traffic Control Signal 4-121
Form 496-9. Application for Approval of Traffic Control Signal Operation . . . 4-122
Form 496-10. Permit for Operation of a Traffic Control Signal 4-123
Form 496-11. Application to Modify Operation of a Traffic Control Signal 4-124
Form 496-12. Signal Agreement for a Traffic control Signal Installed, Maintained and Operated by a Local Agency 4-125
Form 496-13. City Ordinance to Install, Maintain and Operate a Closed Loop System at Interstate Ramps within the Corporation Limits of the City 4-128
Form 496-14. Signal Agreement Where the City Will Be Responsible for the Maintenance and Operation of a Closed Loop System 4-131
Form 496-15. Signal Agreement Where ODOT Will Be Responsible for the Maintenance and Operation of a Closed Loop System 4-134
Form 496-16. Signal Agreement Where an Existing Traffic Control Signal Needs To Be Modified To Add a New Developer's Driveway/Approach 4-137
Form 496-17. Signal Agreement for the Construction of a New Traffic Control Signal at a Developer's Driveway 4-140
Form 496-18. Signal Agreement for Modification of a Traffic Control Signal Where Everything Will Remain the Same Including the Energy Charges 4-145

497 TABLES INDEX 4-149

Table 497-1. Cross Section Area of Conduit, Cable and Wire 4-151
Table 497-2. Cable Wire and Identification 4-152
Table 497-3. Minimum Sight Distance 4-153
Table 497-4. Types of Overhead Sign Supports 4-154
Table 497-5. Load Factors for Signal Heads 4-155

498 FIGURES INDEX 4-157
Figure 498-1. Emergency Traffic Signal Guidelines 4-161
Figure 498-2. Local Government Agency/Utility Force Account Work 4-162
Figure 498-3. Suggested Loop Placement for High-Speed Mainline vs. Large-Volume Side Street 4-163
Figure 498-4. Suggested Loop Placement for Mainline vs. Ramp/T Intersection 4-164
Figure 498-5. Suggested Loop Placement for High-Speed Mainline vs. Low-Speed Side Street 4-165
Figure 498-6. Concrete Pull Box 4-166
Figure 498-7. Trench Details 4-167
Figure 498-8. Exothermic Weld 4-168
Figure 498-9. Power Service 4-169
Figure 498-10. Strain Pole Supports 4-170
Figure 498-11. Strain Pole Attachment Details 4-171
Figure 498-12. Single Arm Support 4-172
Figure 498-13. Sag and Vertical Clearance Diagram 4-173
Figure 498-14. Cable Support Assembly 4-174
Figure 498-15. Aerial Interconnect Cable 4-175
Figure 498-16. Method of Measurement for Signal Cable 4-176
Figure 498-17. Method of Measurement for Interconnect Cable 4-177
Figure 498-18. Method of Measurement for Detector Lead-In Cable 4-178
Figure 498-19. Method of Measurement for Power Cable 4-179
Figure 498-20. Method of Measurement for Service Cable 4-180
Figure 498-21. Vehicular Signal Heads 4-181
Figure 498-22. Pedestrian Signal Heads 4-182
Figure 498-23. Loop Detector Placement and Installation 4-183
Figure 498-24. Loop Detector Slots and Wiring 4-184
Figure 498-25. Loop Detector Wiring 4-185
Figure 498-26. Magnetometer Probes and Lead-In 4-186
Figure 498-27. Ground Rod Testing 4-187
Figure 498-28. Short-Circuit Test 4-188
Figure 498-29. Circuit Continuity Test of Loop Wire 4-189
Figure 498-30. Circuit Continuity Test of Loop Wire and Lead-In Cable 4-190
Figure 498-31. Circuit Continuity Test of Signal Cable Disconnected from Heads or Other Cables Such as Interconnect and Loop or Magnetometer Lead-In 4-191
Figure 498-32. Circuit Continuity Test of Signal Cable With Cable Connected to the Signal Heads and Lamps Installed 4-192
Figure 498-33. Cable Insulation Test (Loop Detector Wire) 4-193
Figure 498-34. Cable Insulation Test (Signal Cable) 4-194
Figure 498-35. SCD TC-81.20 Signal Support Design Chart 4-195
Figure 498-36. Plan Details for Strain Poles 4-196
Figure 498-37. Plan Details for Signal Supports - Arm Lengths 4-197
Figure 498-38. Plan Details for Signal Supports - Mast Arm Orientation 4-198

Part 4 - SIGNALS

400 GENERAL

400-1 Introduction

The **OMUTCD** defines a highway traffic signal as any power operated traffic control device, other than a warning light or steady burning electric lamp, by which traffic is warned or directed to take some specific action. The various types of traffic signals are discussed in **Part 4 of the OMUTCD**.

The information provided in this chapter is intended to supplement the **OMUTCD** by presenting **ODOT** practices and procedures concerning the design, construction, operation and maintenance of the various traffic signal devices.

400-2 Construction Projects

Section 140 addresses the general application of **ODOT** standards, specifications and standard construction drawings to construction projects and ***Section 450*** provides additional construction related information specific to traffic control signals.

400-3 Force Account (ODOT Operations) Work

Districts performing force account signal work must comply with the requirements in the **OMUTCD** and this Manual. It is recommended that the **Districts** follow the provisions in the applicable signing related **SCDs** and **CMS** sections as well. It should be recognized, however, that the information in the **CMS** and **SCDs** does not necessarily provide the only method to achieve a given objective.

Intentionally blank.

401 TRAFFIC CONTROL SIGNALS - GENERAL

401-1 General

OMUTCD Chapter 4D presents information on the design, location and use of traffic control signals. Construction details are shown on the **SCDs TC-81.10 through TC-85.20**. Traffic signal equipment is specified in **CMS Items 632 and 633**, and **CMS 732 and 733**.

401-2 Installation of Traffic Signals on State Highways

Policy 516-002(P) documents **ODOT** policy regarding installation of traffic control signals and intersection control beacons on state highways. A copy of this policy is posted on the network O drive; however, for convenience, a copy has also been included in the Appendix of this manual (***Chapter 13***).

401-3 Periodic Review of Signals

As noted in **OMUTCD Section 4B.03B**, changing traffic patterns may render an existing traffic signal either inefficient or no longer necessary. Therefore, the responsible agency should periodically conduct a traffic engineering study to evaluate the efficiency and necessity of traffic signals under its jurisdiction and determine if revisions may be needed. This traffic engineering study may lead to changing the signal timing, signal phasing, vehicle or pedestrian detection, roadway geometry, or the complete removal of the traffic signal.

Traffic signal installations that are not properly designed and maintained for current traffic conditions, or are no longer warranted, can result in the following conditions:

1. Excessive traffic delay.

2. Increased disobedience of the signal indications.

3. The use of less adequate routes in order to avoid such signals.

4. Increased accident frequency, especially rear-end accidents.

401-4 Removal of Traffic Signals Under ODOT Jurisdiction

If a traffic engineering study indicates that the traffic signal is no longer justified, the traffic signal should be removed by a uniform procedure that will consider public input, accidents, site considerations and an appropriate replacement type of traffic control device. Therefore, when **ODOT** determines that an existing traffic signal installation no longer meets signal warrants as contained in the **OMUTCD**, or is no longer the appropriate form of traffic control, the **District** shall proceed through the following removal process to document and determine if the signal installation should be removed:

1. To determine if the traffic signal is still needed, the **District** shall prepare a traffic engineering study for the signal installation documenting the following information, as appropriate:

    a. Warrant analysis summary. If reasons other than the standard warrants were used to justify the signal installation, determine if these reasons are still valid.

    b. Accident history.

    c. Site conditions, especially sight distance problems.

d. Public, business, school board or governmental complaints resulting in the original signal installation.

e. Present and future developmental growth.

f. Known reasons for change in traffic patterns or volumes.

g. Capacity analysis for the alternate traffic control scheme most likely to be installed if the signal is removed.

h. Analysis of the cost of continued signal operation versus a one time signal removal cost.

i. Discussion of traffic volume growth needed to warrant the signal.

2. Based on the traffic engineering study, the **District** shall decide whether to proceed with the removal process or defer signal removal. If the removal is deferred, the **District** shall document the reasons for deferral. The signalized location shall be reconsidered for removal every year until a signal warrant or other determination of permanent retention is satisfied.

3. If the **District** decides to proceed with the removal process, the following steps shall be taken:

   a. Inform the local media, schools, governmental agencies and local emergency/safety forces of the **ODOT's** intent to study the signalized location for removal.

   b. Remove or reduce intersection sight distance restrictions, if needed.

   c. Install the SIGNAL UNDER STUDY FOR REMOVAL (W3-H12) sign next to the signal heads on each approach.

   d. Check the controller cabinet wiring to ensure that the color of the flashing indications will agree with the alternate traffic control scheme.

   e. Install the alternate traffic control devices, such as STOP signs and advance Warning Signs. Existing Stop Lines on the uncontrolled approaches should not be removed at this time.

   f. Place the signal in flashing operation for ninety days, in conjunction ***with item 3e above***.

4. If the signal is put in flashing operation for ninety days in anticipation of removal, the **District** shall monitor accident experience during the ninety-day flashing period:

   a. If accidents of types susceptible to correction by traffic signal control have increased by more than two, the signalized location shall remain in flashing operation for an additional sixty-day period. If more than two such accidents occur in the second sixty-day period, the **District** should retain the signal in stop-and-go operation until the site conditions can be improved to reduce the accident frequency.

   b. If accidents of types susceptible to correction by traffic signal control have not increased by more than two, continue with the removal process.

   c. The **District** shall also monitor, investigate and respond to the concerns of the public during this period.

5. If the **District** decides to proceed with the removal process after considering the information

gathered in ***item 4***:

a. The signal heads shall be bagged or removed, and the traffic signal turned off for a sixty day period.

b. The accidents shall be monitored to determine if the absence of flashing traffic signals results in an increase in accidents. If accidents occur, the **District** may consider conversion of the traffic signal to a flashing intersection control beacon.

6. If it is decided to continue with removal of the signal, the **District** shall remove the signal heads, poles, foundations (1 foot below grade), pull boxes, overhead cables and controller. Underground conduit and cables may be abandoned in place. If the **District** wants to monitor the site for an extended period of time, the poles and cables may be left in place for one year.

7. The **District** shall notify all affected parties of the removal of the signal and the termination of any agreements that were in effect. If a signal permit exists for the signal removal location, the **District** will notify the **Office of Traffic Engineering** of the signal removal so that a statewide database on **Village** signal permits can be maintained.

401-5 Identifying Maintenance Responsibility for a Traffic Signal

Road users often have a need to know the maintaining agency of a traffic signal in order to report malfunctions or signal timing problems. Many agencies install a sign or a decal on the controller cabinet to inform the public of the responsible agency and give a telephone number to report problems.

In general, the maintaining agency of a traffic signal can be determined as follows:

1. **City/Village**: Inside the corporation limits of a **City** or **Village**, the **City/Village** is responsible for the traffic signal unless the signal is located at the end of an Interstate ramp in which case, **ODOT** may maintain the signals.

2. **ODOT**: Outside the corporation limits of a **City** or **Village**, traffic signals at intersections where at least one of the highways is a State or US Route are maintained by **ODOT**. **ODOT** is responsible for all signals at Interstate ramps.

3. **County**: Outside the corporation limits of a **City** or **Village** and the involved highways are not State or US Routes, the **County** will maintain the signal if at least one of the highways is a County Route.

4. **Township**: Outside the corporation limits of a **City** or **Village** and the involved highways are not State, US or County Routes, the **Township** will maintain the signal.

401-6 Village Signal Permit Procedures

Requests by village authorities for permission to install and operate traffic control signals on state highway extensions within villages ***(Form 496-8)*** should be substantiated by appropriate traffic studies and submitted to the **District Deputy Director of Transportation**. If it is determined that a traffic control signal is warranted, authorization for the installation of a traffic control signal will be issued to the village authorities.

The authorization is valid for 180 days. During this time, the village shall prepare and submit to **ODOT** an operation plan for the proposed traffic signal installation ***(Form 496-9)***. Upon approval of this plan, the village may purchase and install the traffic control signal. The fact that the **Director of**

Transportation is authorized to determine whether a traffic control signal is warranted does not relieve the village authorities in any way from bearing the costs of purchasing, installing and maintaining the traffic signal equipment.

As soon as the traffic control signal has been installed and put in operation, the certification at the bottom of the form shown in ***Form 496-9*** should be filled out and returned to the **District Deputy Director**. The final Traffic Control Signal Permit ***(Form 496-10)*** will then be issued by the **Director of Transportation** and his agent will install an identification tag **(I1-H1)** with the correct permit number.

A request for modification of the hours of operation or timing of these village traffic control signals shall be submitted to the **District Deputy Director** for approval ***(Form 496-11)***. However, alteration of any aspect of the operation of a traffic signal covered by permit requires approval of the **Director of Transportation** and the request shall be submitted using the form shown in ***Form 496-8***.

It is the responsibility of the village authorities to periodically review their traffic signals.

401-7 Signal Agreements

Signal agreements are required when the installation, maintenance and/or operation of a traffic control signal is to be performed by an agency other than the statutory authority.

The following standard signal agreements have been approved by the **Attorney General's Office**. If a developer or local agency signs the standard signal agreement, the **District** should process the agreement. However, if the developer or local agency edits the standard agreement so as to change the intent of the signal agreement, then review by the **Office of Traffic Engineering** is required.

1. Signal Agreement for a traffic control signal installed, financed, maintained and operated by a local agency ***(Form 496-12)***.

2. City Ordinance to install, maintain and operate a closed loop system at Interstate Ramps within the corporation limits of the **City** ***(Form 496-13)***.

3. Signal Agreement where the **City** will be responsible for the maintenance and operation of a closed loop signal system ***(Form 496-14)***.

4. Signal agreement where **ODOT** will be responsible for the maintenance and operation of a closed loop system ***(Form 496-15)***.

5. Signal Agreement where an existing traffic control signal needs to be modified to add a new developer's driveway/approach. It covers the electrical energy charges that may need to be paid by the new developer to the original developer who is responsible for 100% of the power bill ***(Form 496-16)***.

6. Signal Agreement for the construction of a new traffic control signal at a developer's driveway ***(Form 496-17)***.

7. Signal Agreement for modification of a traffic control signal where everything will remain the same including the electrical energy charges ***(Form 496-18)***.

401-8 Open Architecture Traffic Signal Controllers

An open architecture traffic signal controller is a general purpose computer that is adapted for traffic

signal control with software and input/output connections. Two examples of this type of traffic signal controller are the Model 170E and the Model 2070. The software can be purchased separately from the controller and installed by the user. This can result in an agency using only one brand of software but obtaining competitive bids on the hardware.

ODOT has software licenses for both the 170E and 2070 controllers for any **District** to use. The licenses include local controller, master controller and personal computer interface softwares. The Model 2070 controller can be used with **NEMA** TS-1, **NEMA** TS-2 or **Caltrans** 332/336 cabinets. The Model 170E controller can only be used with the **Caltrans** 332/336 cabinets.

Intentionally blank.

402 TRAFFIC CONTROL SIGNAL NEEDS STUDIES

402-1 General

All new or reconstructed signalized intersections shall be warranted based on **OMUTCD Chapter 4C**. For roadway projects that have a minor impact on the existing signals, signal warrants may not be necessary. An example is a pavement planing and resurfacing project which will destroy and replace loop detectors.

The satisfaction of a traffic signal warrant or warrants shall not in itself require the installation of a traffic control signal.

Considerations such as geometrics and lack of sight distance generally have not been accepted in lieu of satisfying signal warrants. These considerations may allow an otherwise unwarranted traffic signal to be retained at 100 percent local cost.

402-2 Traffic Volumes

Actual hourly counts may be factored by a growth factor to increase volumes to the second year after project completion. The **Office of Transportation Technical Services (TTS)** should confirm the growth factors. Growth factors usually range from 1 to 3 percent per year.

When actual traffic counts are used, the counts shall not be over three years old. In addition to proper warrant analysis, good signal design requires recent volume data.

Annual Daily Traffic (ADT) and its determination, along with factors applied to actual traffic counts, should be approved by **TTS**.

Signal warrant volumes from ADT values may be based on an ADT value for the second year following the estimated project completion. The twenty-year ADT shall not be used for signal warrants. The factor to convert the ADT to the desired year is obtained from **TTS**.

An eighth highest hour factor may be used with the ADT for warrant purposes. This factor is obtained from **TTS**, and usually ranges from 0.054 to 0.060 of the ADT. Hourly distribution factors should not be used to develop 8 hours of warrant data from the ADT. These hourly distribution factors vary greatly depending on the type of development surrounding an intersection.

402-3 Signal Warrant Practices and Procedures

402-3.1 General

As noted above, the warrant used to evaluating the need for a traffic control signal at a particular location are described in **OMUTCD Chapter 4C**.

402-3.2 Warrant Nos. 1, 2, and 3 (Volumes)

For determining the number of approach lanes, a short left-turn lane is not usually considered an approach lane **(OMUTCD Section 4C.01, Guidance)**. Usually, the number of approach lanes refers to through lanes. An exception might be where a through lane develops into an exclusive turn lane or high-turning volumes require double turning lanes.

Reducing the volume requirements to the 70 percent value for populations under 10,000 shall be restricted to isolated communities. It is reasonable to include the populations of all communities

within a 5 to 10 mile range of the isolated community's corporation limit. This reduction was meant to acknowledge a difference in the driving characteristics between rural and urban drivers. The 70 percent value can also be applied to roadways with speeds greater than 40 miles per hour. Measured speeds in excess of 40 miles per hour with a posted speed limit less that 40 miles per hour may be considered a speed enforcement problem instead of justification for the 70 percent value.

402-3.3 Warrant No. 5 (School Crossing)

Intersections approved under this warrant shall utilize pedestrian signal heads.

The designer shall show that the intersection is used as a school crossing. This may include:

1. School route plan developed by the school system.

2. Count of pedestrians during the study period. **OMUTCD Section 4C.06** requires a minimum of 20 students during the highest crossing hour.

3. Presence of school crossing guards.

4. Map showing the location of the school relative to the intersection.

In order to show that there is less than one acceptable gap per minute, the designer shall present the following:

1. Street crossing time based on width and crossing speed.

2. The number of gaps in the traffic stream that exceed the minimum crossing time during the study period. These gaps may be measured in the field or approximated using two different equations to find the probability of a gap greater than the crossing time.

   t = required gap time (seconds)
   T = length of time period for which the volume V applies (seconds)
   V = two way vehicular volume across the crossing path in time period T
   e = base of the natural system of logarithms, having an approximate value of 2.718

   The expected number of gaps per hour which are equal to or greater than t will be: $Ve^{-Vt/T}$

   The expected number of t-second intervals per hour which are free of cars will be: $(T/t)e^{-Vt/T}$

402-3.4 Warrant No. 6 (Coordinated Signal System)

ODOT's practice has been to not allow two or more adjacent signals to be warranted under Warrant No. 6. Signal progression is not effectively maintained by low-volume intersections, because the side-street signal phases are not called every cycle. Because of the 1,000 foot spacing requirement for this warrant, it may be better to remove the two or more signals, and accept the resulting signal spacing gap of over one-half mile.

402-3.5 Warrant No. 7 (Crash Experience)

Any traffic signal installed solely on this warrant should be semi-traffic-actuated with control devices which provide proper coordination if installed at an intersection within a coordinated system and normally should be fully traffic-actuated if installed at an isolated intersection.

The following types of accidents are susceptible to correction by traffic signal control:

1. Those involving substantially right-angle collisions or conflicts, such as occur between vehicles on intersecting streets.

2. Those involving conflicts between straight-moving vehicles and crossing pedestrians.

3. Those between straight-moving and left-turning vehicles approaching from opposite directions, if an independent time interval is allowed during the signal cycle for the left-turn movement.

4. Those involving excessive speed, in cases where signal coordination will restrict speed to a reasonable rate.

Traffic control signals cannot be expected to reduce the following types of accidents:

1. Rear-end collisions, which often increase after signalization.

2. Accidents involving pedestrians and turning vehicles when both move during the same interval.

3. Other types of pedestrian accidents, if pedestrians or drivers do not obey the signals.

4. Collisions between vehicles proceeding in the same or opposite directions, one of which makes a turn across the path of the other. This is particularly true if no independent signal interval is provided for these turn movements.

402-4 Unwarranted Existing Signalized Intersections

Every effort should be made to encourage removal of an existing unwarranted signal installation. The designer should realize that all existing unwarranted signals cannot always be removed, most often because of public or political pressures on the maintaining agency. If the removal of signals and the placement of STOP signs is agreed to, the work should be at normal project participation.

If the local agency insists that a large number of unwarranted signals be retained, the State should reevaluate if the project should continue. Reasons for retention of existing unwarranted signals shall be documented.

If an existing unwarranted signalized intersection is retained, the following applies:

1. All work and equipment at the intersection shall be at 100 percent local cost. Written confirmation is required from the local agency.

2. If within a system, signal control equipment shall be upgraded to be compatible with the system (same manufacturer for all controller software).

3. If within an area approved for special design considerations (such as mast arms, aesthetically designed poles, etc.), the unwarranted intersection shall be upgraded to these standards.

4. If it is not necessary to upgrade equipment except for the controller, the existing intersection signals, signs and pavement markings shall be in conformance with the **OMUTCD**. Deficiencies may be corrected by the project (at 100 percent local cost) or by the local maintaining agency. The intersection shall conform to the **OMUTCD** by the final inspection of the construction project.

Intentionally blank.

403 TRAFFIC CONTROL SIGNAL FEATURES AND OPERATION

403-1 General

OMUTCD Chapter 4D presents information on the design, location and use of traffic control signals. Construction details are shown on the **SCDs TC-81.10 through TC-85.20**. Traffic signal equipment is specified in **CMS Items 632 and 633**, and **CMS 732 and 733**.

403-2 Vehicle Change Interval

The vehicle change interval (or phase change interval) described in **OMUTCD Section 4D.10** consists of the yellow change interval and the all-red clearance interval. The yellow change interval advises drivers that their phase has expired and that they should stop or proceed through the intersection if they are too close to stop. The yellow change interval should be followed by a red clearance interval (all-red phase) of sufficient duration to permit traffic to clear the intersection before conflicting traffic movements are released. For more efficient operations, start-up time for the conflicting movements may be considered when setting the length of the all-red.

The length of the phase change interval can be determined using the following equation, in which [(W+L)/ V] represents the all red interval:

$$Y + AR = t + V/(2a + 64.4g) + [(W + L) / V] \quad \text{(for English units)}$$

$$Y + AR = t + V/(2a + 19.6g) + [(W + L) / V] \quad \text{(for metric)}$$

Where: Y + AR = Sum of the yellow and all-red,

t = perception/reaction time of driver, (typically assumed to be 1 second)

V = approach speed, ft/s (m/s)

a = deceleration rate, ft/s^2 (m/s^2)
(typically assumed to be 10 ft/s^2 (3.0 m/s^2))

W = width of intersection, ft (m)
(measured from the near side Stop Line to the far edge of the conflicting traffic lane, along the actual vehicular path)

L = length of vehicle, ft (m)
(typically assumed to be 20 feet (6.0 meters))

g = approach grade, percent of grade divided by 100 (plus for upgrade, minus for downgrade)

Yellow change intervals typically are in the range of three to six seconds, and the typical maximum all-red interval is two seconds.

403-3 Off-Peak Flashing Operation of Traffic Control Signals

Using a flashing operation at a signalized intersection during off-peak or low-volume periods may increase the efficiency of the intersection. It also reduces fuel consumption by the traveling public because of the fewer starts and stops, and helps to improve the environment by reducing air and noise pollution. The signal head itself consumes a significantly lower amount of power during flashing operation as compared to regular signal operation. Flashing operation at a signalized intersection

during off-peak hours is cost effective and should be considered at those intersections where safety would not be compromised. However, each intersection considered for flashing operation should be carefully analyzed, since recent research also indicates that accident rates may increase, especially at night.

The following considerations should be taken into account when making a decision to use off-peak flashing operation at a signalized intersection:

1. Flashing operation may be appropriate at simple, four-legged or three-legged intersections where the minor street drivers have an unrestricted view of approaching main street traffic and the traffic volume meet the criteria in item 2 below.

2. The two-way main-street volume should not exceed 200 vehicles per hour (vph). However, if the two-way main street volume is greater than 200 vph and the ratio of main street volume to minor street volume is greater than 3, flashing operation may be appropriate.

3. In areas where night establishments are located and driving while under the influence of alcohol may occur, flashing operation should not begin until one hour after these establishments close.

4. A "speedway" effect can be avoided and uniform speeds can be achieved by maintaining enough regularly operating signals at appropriate spacing to provide signal progression at the desired speed.

5. When a traffic control signal is put on flashing operation, a yellow indication is normally used for the major street and red indications are used for all other approaches. The **OMUTCD** stipulates that yellow indications shall not be used for all approaches. **OMUTCD Sections 4D.11 and 4D.12** list requirements for flashing operations.

6. After off-peak flashing operation has been implemented, the accident pattern should be monitored. The signal should be changed to regular operation if the accident pattern and/or severity increases. The following guidelines should be used:

   a. A short-term rate of three right-angle accidents in one year.

   b. A long-term rate of two right-angle accidents per million vehicles entering during the flashing operation, if the rate is based on three to five observed right-angle accidents.

   c. A long -term rate of 1.6 right-angle accidents per million vehicles entering during the flashing operation if the rate is based on six or more observed right-angle accidents.

403-4 Approach Monitoring

All **ODOT**-maintained traffic signals shall be designed to use an approach monitoring concept.

Approach monitoring makes use of the dual indication monitoring capabilities of the **NEMA** plus or **NEMA** extended monitor. The approach monitoring concept will not function if the "plus" features in the monitor are disabled or not available. Intersections designed for approach monitoring permit the "plus" monitor to detect total loss of a signal color indication on an approach basis rather than a per phase basis. With approach monitoring, the loss of all green, yellow or red indications on an approach place the intersection into flash. **ODOT 's** primary intent however is to catch the red out.

To detect a "no load" signal condition, a basic signal design is necessary. The approach monitoring design requires each approach to be wired separately. Each has its own load switch and its own monitor channel. The final equipment requirement is a **NEMA** plus monitor programmed to

accommodate the approach monitor design.

403-5 Computer-Controlled Traffic Signal Systems

Uniform procedures have been established with respect to the planning, design and administration of traffic signal system projects with computer control or traffic responsive features that will involve the use of State or Federal monies. These procedures are intended to:

1. Assure that potential systems are properly planned for in terms of manpower, training, budget and maintenance commitments.

2. Provide uniformity in the scope of the report for small computer controlled systems in fulfilling the requirements for a traffic engineering analysis.

3. Keep the cost of the report process commensurate with the increase in cost to the project for the control system.

4. Provide consistency in evaluation of the reports by the reviewing government agencies.

5. Simplify the report process for small communities and maintaining agencies.

The **Federal-Aid Policy Guide**, **23 CFR 655D** sets forth procedures and policies for the use of Federal funds on Traffic Surveillance and Control projects. The **Federal-Aid Policy Guide** calls for a traffic engineering analysis, but does not specifically state what information is to be provided and allows the report writer to customize the report to match the sophistication and scope of the specific project.

Personal computers are commonly being used to control, monitor and produce reports on the operation of master and local controllers. Several masters can be operated under the supervision of one personal computer (PC) with the use of modems and dedicated communication lines or standard telephone lines. These control systems are a reliable and tested technology and are available as off-the-shelf equipment from several manufacturers

The equipment manufacturer's system software is usually proprietary so that only system controllers of this brand can be monitored directly by the system computer. In some systems, local interface units can be attached to a **NEMA** controller to interface with the system, but some degradation of features is experienced and the cost of the interface unit approaches the cost of a new system local controller. Some manufacturers' systems cannot mix intersections controlled by the interface units and system local controllers on the same master controller.

ODOT's concern is that project funds will be used to purchase a PC monitoring system and only a very small percentage of the local controllers expected to be used in the PC-controlled network. The maintaining agency may inappropriately then, consider themselves well positioned to request proprietary bids for purchasing large numbers of remaining intersection controllers without competitive bidding. In some instances small communities have purchased the PC monitor software with their own funds and then expected **ODOT** to grant proprietary bids on any controllers within the **City** without any justification for the use of project funds.

The project report fulfilling the requirements for a traffic engineering analysis should be sized to the project's additional costs and needs. The voluminous computer printouts of various application programs are not desired, unless to demonstrate a specific problem solution. The report should emphasize how the maintaining agency will use and maintain the system now and in the future.

The cost analysis will usually show that the system traffic detectors, if used for system control, will be

the largest additional expense with the greatest maintenance consideration. Systems can be designed to utilize very few system loops and justification can be based on the use of the diagnostic and reporting features of the system.

At some time during the specification review for non-proprietary bids, the designer may be asked to show that three manufacturers can bid on the plan specifications. This can be accomplished by at least three equipment suppliers commenting on the plan specifications during design.

The following procedure shall be used when reviewing requests for this equipment:

1. For traffic signal systems that will be controlled by PC, a report will be provided to **ODOT** that should include the following information:

    a. System Control Information

        i. Description of the area or **City** with regard to population, land use, number of signalized intersections, roadway and natural features.

        ii. Map or scaled schematic of the major streets showing signalized locations.

        iii. Condition, age and type of present equipment.

        iv. Description of the current problems.

        v. Capacity analysis, collision diagrams, coordination runs, and travel/delay runs, only to the extent necessary to substantiate problems; otherwise, these items are not required to justify the system although they are of significant use in designing a system.

        vi. Discussion of why computer-controlled signal system technology is being recommended over more or less complex signal systems.

        vii. Description of recommended control strategy including location of monitor stations, areas of subsystem control and possible future expansion. Discussion should be included on how the project limits were determined. The termini points should be based on traffic flow and progression. It is important that the utilization of the system be described for the largest possible control area.

        viii. Discussion of interaction with any existing control systems that are to remain.

        ix. Location and impact of signalized intersections adjacent to the proposed system.

        x. Preemption considerations.

        xi. Discussion of interaction with other maintenance agencies. Discussion of dealings with, or commitments from, adjacent communities recognizing the need to coordinate their individual systems to benefit traffic flow. This could include letters from each community indicating their commitment to work together to establish a coordinated signal system.

        xii. Description of how the system will resolve any previously defined problems.

        xiii. Description of who will produce initial timing plans for an upgraded system.

        xiv. Future projects or commitments to extend and/or coordinate a particular signal system.

b. Maintenance Capabilities

i. Discussion of maintenance methods; for example, in-house or contract. If in-house, describe the agency's personnel, facilities and financial resources. If contract, describe extent of services and quality desired, as well as capability of potential contractors.

ii. Description of the traffic engineering staff's experience with software of this type, PCs and the application programs that will be used to produce initial timing plans for an upgraded system and periodic updates.

iii. A letter from the maintaining agency stating that it is committed to operating and maintaining the proposed system and understands the commitments and costs.

c. Costs

i. An estimate of the additional cost attributable to the closed loop system. Use a hard wired time-of-day system for comparison, and include software, training, system equipment, specialized test equipment, and the installation of system detectors.

ii. Normally, do not provide any type of cost/benefit comparison nor any analysis of cost savings for reductions in pollution or delay.

iii. An estimate of increased maintenance and personnel costs and how the maintaining agency will accommodate it.

d. Special Features

i. Describe any features of the closed loop system that are especially beneficial to the maintaining agency. This may be linked to the description of current problems described in ***item 1a*** *of this procedure*.

ii. Describe use, maintenance and need for any advanced technology items, such as fiber optic cable, surveillance cameras, video detection, computer servers, workstations, etc.

2. The **District** will be responsible for review and approval of the maintaining agency's report. Assistance from the **Office of Traffic Engineering (OTE)** will be available upon request.

3. The report will not serve as a justification for items that are covered under other **ODOT** policies or practices. Separate justifications should be prepared for items such as, but not limited to:

a. Proprietary bids ***(see Section 1220-2)***;

b. Emergency vehicle preemption ***(see Section 403-6)***;

c. Experimental technology; and

d. Signal warrant analysis.

403-6 Priority Control Systems

403-6.1 General

As noted in **OMUTCD Section 4D.13**, preemption systems are used to give certain vehicles

priority control over traffic signals. These systems use devices located on an approaching vehicle to preempt the normal operation of signalized intersections. This section provides a consistent method for funding traffic control signal preemption systems if needed.

Over the years, several methods of providing priority control of traffic signals have been developed. The first method, which is not covered by this section, involves a hard-wired signal system. For example, personnel in the fire station can activate one or more circuits by pushbutton to preempt a series of signalized intersections. This system is usually not proprietary and is localized to the main arterial intersections near the fire station.

The intent of this section is to cover a second method of priority control which involves equipping the vehicle with a preemption emitter and equipping the signalized intersection with preemption receivers. These systems tend to use proprietary equipment, and once a local governmental agency installs the equipment, the agency is restricted to the same brand and type of preemption equipment in order to have emitters and receivers work together.

Vehicle-activated systems can use light (optics), sound or radio signals to activate a receiver at the intersection. Optical and sound-activated systems are extensively used in Ohio. The optical system uses a strobe-type light emitter mounted on the vehicle and sound-activated systems use the siren from the vehicle. Some recent innovations by manufacturers include coding a vehicle identification number into the emission signal and coding various levels of priority control so that the preempt system can be used by public transit vehicles.

No statistically significant and independently verified research has been submitted to **ODOT** to show that preemption systems reduce conflicts and response times. No statistically significant and independently verified research shows that any one type of system (optical, sound or radio) is superior in reducing conflicts or response times. Each system has benefits inherent in the type of signal used.

While unproven, **ODOT** concedes that the judicious use of vehicle preemption is likely to provide some increase in safety and reduction in response times; however, **ODOT** is not convinced that there is a significant performance difference in the effects of any system.

403-6.2 Procedures

For new preemption systems, **ODOT** will participate at the normal project participation rate in the acquisition and installation of a generic preemption system as determined by the lowest contract bid price. In addition to obtaining generic bids, a local governmental agency may request alternate bids if they desire a specific brand of preemption equipment and agree to pay any extra cost above the generic bid price.

When a municipality adds intersections to its existing preempt system, it can obtain the same type of equipment by either the use of alternate bids or, if justified, proprietary bids.

For proprietary bids to be considered justified, the existing preempt system must control an appreciable part of the municipality's intersections before it can be considered to represent the municipality's standard. As a measure of this standard, the existing system must constitute at least fifty percent of the signalized intersections of a municipality. If this test is met, a proprietary bid requested by the municipality will be given consideration. Otherwise, alternate bids may be used to limit State and Federal participation to the generic system costs.

403-6.3 Preemption Emitters

The quantity of vehicle hardware provided with the system shall be as determined by the

municipality, but should not exceed three emitters for each signalized intersection which will be equipped with preemption as a part of the project. Only fire, emergency medical, police and transit vehicles are eligible to be equipped. If alternate bids are used and the desired system utilizes vehicle-mounted emitters, the cost of this hardware shall be included in the alternate bid cost for comparison to the generic bids.

403-6.4 Local Maintaining Agency Policies

As a requirement for inclusion of vehicle preemption equipment in the contract, the local governmental agency shall have policies for the use of preemption. For safety forces, the policies shall specify the types of emergency calls for which preemption may be employed and shall define any use of preemption when lights and sirens are not simultaneously employed. For transit vehicles, the policies shall define when and under what conditions the preemption may be employed.

When possible, municipalities are strongly encouraged to develop signal preemption policies which coordinate with surrounding **City**, **County** and **Township** forces. They should take into account mutual aid agreements, access to hospitals and transit where a vehicle operates outside of its normal jurisdiction. The relevant policies should be submitted as a part of the preemption system documentation.

403-6.5 Documentation

The decision to install and maintain a priority control system shall be made by the maintaining agency. In order to document the site specific characteristics, the following information will be submitted with any proposal for such a system to the district:

1. Description of the corridor area in which the system is to be installed, including a map or scaled schematic showing the affected signalized locations.

2. Discussion of the current delays, response times and hazards, and a discussion of the expected benefits from the system.

3. Description of the proposed operation of the system, including the local agency's procedures for the use of the system.

4. Designation of the vehicles which will have access to the system. If privately-owned equipment is to be included, the policy on their inclusion should be stated.

5. Description of the policing policy to prevent use of the system by unauthorized vehicles, including the procedure to remove any equipment from vehicles that misuse or are not authorized for use of the system.

6. Demonstration of the local agency's ability to maintain the system.

7. Estimate of the construction cost of the system.

8. Miscellaneous information to be included:

    a. Number of emergency runs or transit vehicles through the area per day.

    b. Routes designated or planned for emergency or transit vehicles which would benefit by the system.

c. Width of the streets used as routes. For example, is there room for traffic to move off the emergency route?

d. Sight distance at the signalized intersections and listing of any one-way streets in the area.

e. History of emergency or transit vehicles involved in accidents.

f. History of emergency or transit vehicles being delayed in heavy traffic.

403-7 Protected/Permissive Left Turn Signal Face Display (Separate Head)

The 2000 version of the **MUTCD,** published by **FHWA**, and the subsequent **OMUTCD**, introduced a new type of protected/permissive left turn signal display. The new left turn signal display utilizes a "separate" 5-section signal face that only pertains to the left turn lane. The requirements for its use are described in the **OMUTCD Chapter 4D.06C**. The protected/permissive signal head requirements, referenced above, still retain the "shared" 5-section signal face display that has been used extensively throughout **Ohio**.

The 2000 version of the **MUTCD**, published by **FHWA**, and the subsequent **OMUTCD** also contain a requirement for the simultaneous display of green arrow and circular red indications in the "separate" 5-section signal face. The requirement produces unusual and confusing signal displays on a roadway approach. The next revision of the **MUTCD** should clarify and resolve the signal display requirements. **OTE** recommends that any maintaining agency considering use of the "separate" left turn signal head for protected/permissive operation, should wait until the revisions are issued and the **OMUTCD** is updated.

Because the "separate" signal face display for protected/permissive left turns may be confusing to motorists, especially the elderly driver, the operation shall not be implemented at **ODOT**-owned signalized intersections without prior approval of the **Office of Traffic Engineering Administrator**.

An example of the signal display sequence for a "separate" 5-section signal face is illustrated on a web link from the **Office of Traffic Engineering's** home page at www.dot.state.oh.us/traffic. **Section 420-4.4** discusses the location of both the "shared" and "separate" 5-section signal face with respect to the approach lanes.

404 PEDESTRIAN CONTROL FEATURES

404-1 General

Pedestrian signal indications (**see OMUTCD Figure 4E-1**) are special types of traffic signal indications intended for the exclusive purpose of controlling pedestrian traffic. Pedestrian signals are discussed in **OMUTCD Chapter 4E**. Construction mounting details are shown on **SCD TC-85.10**. Pedestrian signal equipment is specified in **CMS Item 632** and **CMS 732**.

404-2 Push Buttons

OMUTCD Section 4D.07 addresses pedestrian detection, usually accomplished using push buttons.

On actuated signal phases, if there is a reasonable expectation of regular pedestrian use, the phase should be equipped with pedestrian push buttons to provide sufficient time to safely cross the highway.

This is especially important on side-street phases where the signal green time is usually based on a short initial green interval with the green time extended by signal actuations. The initial green interval is usually not long enough to allow a pedestrian to cross the mainline. The pedestrian push button will initiate a guaranteed crossing time without input from vehicular traffic. The push button will also provide the pedestrian with a means to cross the mainline when there is no side-street traffic to initiate the signal phase for the pedestrian crossing.

If the push button is provided, it shall be easily accessible without interference from guardrail, ditches or other obstructions. Pedestrian signal heads are not required to be installed just because pedestrian push buttons are used.

404-3 Audible Pedestrian Signals

Audible Pedestrian Signals supplement visual WALK indications and are designed to aid visually impaired pedestrians.

The installation of Audible Pedestrian Signals at State-maintained traffic signals may be considered when an engineering study has been conducted and the following minimum conditions are met:

1. The proposed intersection crosswalk must be signalized.

2. The audible devices should be retrofittable to the existing traffic signal hardware.

3. The signalized intersection should be equipped with pedestrian push buttons.

4. The selected crosswalk must be suitable for the installation of Audible Pedestrian Signals, in terms of surrounding land use and traffic patterns.

5. There must be a demonstrated need for the audible devices in the form of a request from an individual or group that would use the audible signal.

6. The individual or group requesting the device should agree to train the visually impaired users of the Audible Pedestrian Signals.

The audible devices selected should emit a “Cuckoo” WALK sound for a crosswalk in the North-South direction and a “Peep-Peep” WALK sound for a crosswalk in the East-West direction.

Additional guidance is available in **Section 4E.06 of the OMUTCD**.

405 FLASHING BEACONS

405-1 General

Flashing Beacons are addressed in **OMUTCD Chapter 4K.**

405-2 STOP Signs and Intersection Control Beacons

A STOP sign shall be used with a flashing red Intersection Control Beacon.

Intentionally blank.

406 SPECIAL PURPOSE TRAFFIC CONTROL SIGNALS

406-1 General

OMUTCD Chapters 4F through 4J presents information on miscellaneous types of highway traffic signals including signals for lane-use control, bridges, emergency traffic, ramps and one-lane, two-way facilities.

406-2 Temporary Traffic Signals

Temporary traffic signals are currently addressed in **OMUTCD Section 4D-20**. Additional information about traffic signals used in temporary traffic control zones is provided in **OMUTCD Section 6F.74** and ***Part 6*** of this Manual.

406-3 Traffic Control Signals for Emergency Vehicle Access Guidelines

Traffic control signals for emergency vehicle access may be justified if the cross-corner sight distance is less than the appropriate value given in ***Figure 498-1***, or if the volume of traffic during an average day exceeds the values given below:

Number of Lanes	ADT (Both Directions)
4 or more	16,000
3	9,000
2	6,000

OMUTCD Chapter 4F presents information on the design and operation of traffic control signals for emergency vehicle access.

Intentionally blank.

407 OTHER ELECTRICAL DEVICES

407-1 General

This part of the **TEM** is used to address other traffic control electrical devices, including active signs, used on **ODOT**-maintained highways.

407-2 PREPARE TO STOP WHEN FLASHING Signs (W3-H6)

407-2.1 General

The PREPARE TO STOP WHEN FLASHING (PTSWF) sign (W3-H6) is used to provide drivers approaching a traffic signal with additional information concerning the changing of the traffic signal indication from green to yellow. Drivers who are past the dilemma zone will usually decide to continue through the intersection when the yellow indication is displayed, while drivers who have not yet entered the dilemma zone will decide to stop. This sign can also be used to provide advance information when the geometric design of the intersection approach prevents the signal display from being seen in time to stop.

407-2.2 Applications

The following are typical applications for PTSWF signs. Installation of the PTSWF sign should only be implemented upon failure of the progressive application of countermeasures just described:

1. A location (usually four-lane divided) with high approach speeds ($\geq$ 45 miles per hour), a high rear-end accident rate, and evidence of rear-end conflicts (skid marks) at the intersection.

2. A remote rural location with high speeds where the presence of a signal is unexpected.

3. A location with high approach speeds and diminished signal sight distance due to horizontal and/or vertical curves or structures.

4. A location with a high percentage of high-speed truck traffic with frequent violations of the clearance interval and excessive angle and rear-end accidents.

The installation of a signal can be expected to significantly increase rear-end accidents even at locations without the above described characteristics. No signalized intersection is likely to be completely free of rear-end accidents. Consequently, restraint should be exercised in the use of PTSWF signs since the overuse of any warning device can reduce its effectiveness. It should also be noted that the use of this device reduces the efficiency of the signal operation by delaying the termination of the green. Also, studies of PTSWF applications have shown that vehicle speeds through the intersection may increase.

407-2.3 Procedure

Prior to installation of the PTSWF signs, it should be determined that proper advance signing has been in place and that the detectors are operating correctly and are located beyond the dilemma zone for the approach speeds involved. If the detectors and Signal Ahead (W3-3) signs are improperly located, this should be corrected and evaluated before installing PTSWF signs. Other detector design techniques to minimize dilemma zone exposure may also be employed.

Generally, the PTSWF sign should be used only where conventional traffic control devices have been tried and found ineffective in reducing accidents, or where operational problems related to

rear-end, or other accidents caused by failure to stop, have occurred. For existing signalized intersections, the following progressive application of countermeasures should be utilized to address accidents caused by failure to stop:

1. Installation of a single Signal Ahead (W3-3) sign.
2. Dual W3-3 signs.
3. Oversized, dual W3-3 signs.
4. W3-3 signs with continuously flashing beacons.
5. Extended Call - Delay Call Loops (EC-DC Loops).
6. PTSWF (W3-H6) signs.

407-2.4 Operations and Placement

The PTSWF sign installation typically consists of the following equipment:

- PTSWF sign,
- Flashing beacons with down lights,
- Sign bracket assembly,
- Sign support with breakaway foundation,
- Flasher and flash control assembly, and
- Wiring to connect flashing beacons and controller.

Auxiliary equipment shall be provided in the signal controller to operate the PTSWF sign beacons. This equipment shall be set to start the sign beacons flashing for a predetermined number of seconds (with variable settings) before the termination of green. Flashing operation of the PTSWF sign shall typically end when green is displayed to the approach. The beacons shall flash simultaneously. The beacons shall not be activated when the signal controller operation goes to "flash" mode. For high-speed applications at four-legged intersections, PTSWF signs shall be employed for both directions of a roadway unless there are factors which would dictate the need for one direction only. When PTSWF signs are used on four-lane divided highways, dual installation should be considered.

When a PTSWF sign is added to an approach with W3-3 signs with beacons already in place, the beacons on the W3-3 signs shall be removed.

The symbolic Signal Ahead (W3-3) sign shall be used in conjunction with a PTSWF sign and governed by the following provisions:

- The W3-3 sign shall always be located in advance of the PTSWF sign.
- It shall be no closer than 200 feet (60.96 meters) to the PTSWF sign, and must also meet the minimum placement criteria described in **OMUTCD Section 2C.26**.
- If the PTSWF sign is installed subsequent to the W3-3 sign (which is usually the case), the

W3-3 sign may require relocation to comply with the 200 foot (60.96 meters) sign spacing criteria.

The following factors are needed to determine PTSWF sign location (S) and timing (T):

t	=	1.0, perception-reaction time in seconds
1.47	=	conversion factor from miles per hour to feet per second, (0.278 for km/hr to m/s)
V_1	=	85th percentile approach speed, mph (km/hr)
V_2	=	15th percentile approach speed, mph (km/hr)
f	=	.266 coefficient of friction (wet)
g	=	approach grade, percent/100
S	=	sign location from stop line , ft.(m)
T	=	delay timing, sec.
a	=	100 feet (30.48 m), represent a zone in front of sign where drivers would be unable to perceive meaning of flashing sign
b	=	distance [1.47(t)(V_2)] [0.278(t)(V_2) (metric units)], space in front of the dilemma zone where most drivers would not attempt to stop.

S & T are calculated by:

$$S=1.47\ V_1t + \frac{V_1^2}{30(f\pm g)} \qquad S=0.278\ V_1t + \frac{V_1^2}{254.92(f\pm g)} \text{ (metric units)}$$

$$T= \frac{S+a-b}{1.47\ V_2} \qquad T= \frac{S+a-b}{0.278\ V_2} \text{ (metric units)}$$

Example in English Units: $V_1 = 58$ mph, $V_2 = 47$ mph g = + 0.5%

$$S=(1.47)(58)(1.0) + \frac{58^2}{30(.266+.005)} \qquad T= \frac{499+100-(1.47)(1.0)(47)}{1.47(47)}$$

S=25.9 +126.2 T= 7.7 sec.
S=499 Ft.

Example in Metric Units: V_1 = 93.34 km/hr (58 mph), V_2= 75.64 km/hr (47 mph), g = + 0.5%

$$S = (0.278)(93.32)(1.0) + \frac{93.32^2}{254.92(0.266+0.005)} \qquad T = \frac{152.1+30.48-(0.278)(1.0)(75.64)}{0.278(75.64)}$$

S= 25.9+126.2 T= 7.7 sec.

S= 152.1 Meter

407-2.5 Criteria for Removal

The following should be used as criteria for removal:

1. When there are two or more signalized intersections on the same route and the spacing between each signal is 0.5 mile (800 meters) or less.

2. When a signal becomes part of a coordinated system.

3. When the posted speed is reduced to less than 45 miles per hour (72 km/hr).

4. Upon mitigation of the condition that caused the sight distance limitation where the PTSWF sign is installed.

Prior to removal of the PTSWF signs, the signs shall be covered and flashers disconnected for a minimum of ten days.

408 IN-ROADWAY LIGHTS

408-1 General

In-Roadway Lights are considered a new type of highway traffic signal. They are installed in the roadway surface to warn road users that they are approaching a condition on or adjacent to the roadway that might not be readily apparent and might require the road users to slow down and/or come to a stop. Typical uses for this device would be marked school crosswalks and marked midblock crosswalks. In-Roadway Warning Lights at crosswalks shall not be used at crosswalks controlled by Yield signs, STOP signs, or Traffic control signals. Information on this new device is in the **OMUTCD**, **Chapter 4L**.

408-2 Use of In-Roadway Lights on State Highways

Because of the high speeds and volumes associated with state highways, an engineering study should be conducted to determine if other measures, such as increased signing and pavement marking, should be implemented before the use of in-roadway crosswalk warning lights on **ODOT**-maintained highways. Any engineering study pertaining to the installation of in-roadway lights on state highways should be coordinated with the **Office of Traffic Engineering**. The use of in-roadway lights at highway-rail grade crossings should also be coordinated with the **Ohio Rail Development Commission**.

Intentionally blank.

420 MATERIALS AND SIGNAL HARDWARE

420-1 General

Construction details are shown on **SCDs TC-81.10 through TC-85.20**. Traffic signal equipment is specified in **CMS Items 632 and 633** and **CMS 732 and 733**.

420-2 Patented or Proprietary Materials, Specifications or Processes

The use of patented or proprietary materials, specifications or processes is discussed in ***Section 1220-2***.

420-3 Purchasing Materials for Installation and Use by Local Agencies

To help encourage uniformity and provide a method whereby local agencies can buy traffic control materials and equipment using federal funds, ***Sections 1220-4 and 1220-5*** describe processes that have been established whereby local agencies can purchase such items through **ODOT**.

420-4 Vehicular Signal Heads

420-4.1 General

The standards related to vehicular signal heads are addressed generally in **OMUTCD Chapter 4D**.

420-4.2 Signal Head Color

OMUTCD Section 4D.18 indicates that it is desirable for the color of signal head housing to be highway yellow. In **ODOT**-maintained traffic signal installations, the vehicular signal head housings and the outside of the visors shall be highway yellow.

420-4.3 Signal Lens

Signal lenses may be made of glass or plastic. In **ODOT**-maintained traffic signal installations, glass signal lenses should be used. At rural **ODOT** intersections, the signal may dwell in a phase for long periods of time during the night causing heat damage to a plastic lens.

The size of signal lenses may be 8 inch or 12 inch depending on the provisions of **OMUTCD Section 4D.15**. In **ODOT**-maintained traffic signal installations, the 12-inch lens should be used. The 8-inch lens is typically used for low-speed, urban applications.

420-4.4 Location of Five-Section Signal Heads for Protected/Permissive Turns

OMUTCD chapter 4D.06.C contains the requirements for two different types of signal head use for protected/permissive left turns. In protected/permissive signal phasing, the left (or right) turns can be made in both a protected (green arrow) and a permitted (circular green) signal phase. The 5-section signal faces are utilized as either a “shared” signal or a “separate” signal.

“Shared” 5-section signal face:

Because the circular signal indications in this five-section signal head apply to both the through and turning vehicles, the signal head should be located on an extension of the Channelizing Line that separates the through and turn lanes. The “shared” type of 5-section signal face is used extensively throughout **Ohio**.

Left-turn lanes on four-lane highways with wide medians are often separated from the through lanes by a large painted channelizing island in order to provide good alignment and sight distance for opposing left-turn vehicles. In this case, the five-section head should be located in front of the left-turn lane with an R10-12 sign, LEFT TURN YIELD ON GREEN, next to the signal head. Two additional three-section signal heads should be provided for the through-traffic lanes. The maintaining agency should monitor accidents for this type of operation with the wide median. **ODOT's** experience in some parts of the State showed that left-turning drivers were not yielding on the circular green and the phase operation had to be converted to "protected only."

"Separate" 5-section signal face:

Because the circular signal indications in this five-section signal head apply only to the turning vehicles, the signal head should be located in the middle of the left-turn lane with at least two additional three-section signal heads provided for the through traffic lanes. Refer to ***Section 403-7*** for additional information on the signal display sequencing for the "separate" 5-section signal face.

420-4.5 Aluminum versus Polycarbonate

Vehicular signal heads are manufactured in either aluminum or polycarbonate plastic. The choice of which material to use will be made by the maintaining agency. Many urban jurisdictions prefer the use of polycarbonate, because they are much lighter and easier to work with. Because of the lighter weight, they are often used when adding left-turn signal heads to an existing signal support system. Polycarbonate signal heads are most often associated with rigid-mounted signal heads on mast arms where wind sway will not be a factor.

In **ODOT**-maintained traffic signal installations, aluminum signal heads should be used to reduce signal head sway in windy conditions unless rigid mounting or span wire tethers are used.

420-4.6 Programmable Signal Heads

A programmable signal head utilizes a special optical lens that can be "programmed" to provide the signal display to only desired portions of the roadway. The programming is accomplished by masking (with tape) portions of the lens through the rear of the housing. Applications for the use of programmable heads may be severely skewed roadways where the signals may be visible from either approach and closely spaced intersections.

Because the lens is programmed to be visible from certain areas, the signal head should be rigid mounted or tethered. Programmable signal heads are much more expensive than a regular signal head and, if programmed incorrectly, can create an unsafe condition. Signal designers should give careful thought to their use.

See ***Section 450-9.4*** for additional details on optically programmable signal heads.

420-4.7 Signal Indications on the Stem of a T Intersection

For through traffic, a minimum of two signal faces shall be provided and shall be continuously visible per the requirements of **OMUTCD Section 4D.15**.

On the stem of a T intersection, where there is no through traffic, at least one of the turning movements shall be provided with dual indications. If two three-section heads are used, one with a left-turn green arrow and the other with a right-turn green arrow, the approach does not meet the minimum requirements of the **OMUTCD**. Two circular greens are sufficient, or two circular greens with one or two arrows (four-section heads) are acceptable. The purpose of providing dual

indications is to ensure that if one lamp fails, a second lamp will be provided to the predominant movement.

420-4.8 Signal Head Clearance

The **OMUTCD** requires that the bottom of the housing of a vehicle signal face suspended over a roadway shall be at least 15 feet, and the top of the signal housing shall not be more than 25.6 feet above the pavement grade at the center of the roadway. For new construction, **SCD TC- 85.20** requires a clearance of 16 to 18 feet. The use of drop pipes is technically acceptable; however, they provide an aesthetically inferior installation.

420-5 Detector Loop Placement

Figures 498-3 through 498-5 illustrate suggested loop placements for traffic control signals in the following situations: High-Speed Mainline vs. Large-Volume Generator Side Street, Mainline vs. Ramp/T Intersection, and High-Speed Mainline vs. Low-Speed Side Street. ***Section 450-10.7*** provides additional detail information about loop placement and wiring.

These are intended only as suggestions for detector placement and a naming convention. Actual placement will depend on individual conditions and **District** practices. Electronic copies of the drawings are available upon request.

Intentionally blank.

421 SIGNAL SUPPORTS

421-1 General

OMUTCD Section 4D.19 presents information on the lateral placement of signal supports. Construction details are shown on **SCDs TC-21.20, TC-81.10 and TC-81.20**. Signal supports are specified in **CMS Item 632** and **CMS 732**.

421-2 Signal Support Inspections

A statewide uniform practice for the periodic inspection of the structural components of **ODOT**-maintained signal supports is necessary to assure their structural integrity. All strain pole and mast arm supports should be periodically inspected. The inspections should be conducted in a systematic and organized manner that will be efficient and minimize the possibility of any item being overlooked. The use of an inspection form is recommended. See ***Section 496-1*** for a Sample Signal Support Inspection Form which may be used as is or modified by the **District** as desired.

Supports should be visually inspected from the ground. Binoculars should be used as an aid for visual inspections. Use of a bucket truck or other means is not necessary on a routine basis, but may be used to more closely examine a defect that has been detected from the ground. Anchor bolts should be tested for structural integrity by sounding with a hammer. Non-destructive testing procedures, such as dye penetrant, ultrasonics, and magnetic particle, are not necessary on a routine basis, but can be used to define the extent of a defect that has been detected by visual means. Written documentation of all inspections should be kept.

Items to be inspected should include, but not be limited to, foundation concrete, soil around foundation, anchor bolts and nuts, structural members and structural connections.

Deficiencies to be inspected for should include, but not be limited to, cracks in concrete, soil erosion, non-bearing leveling nuts, loose anchor nuts, bent or distorted structural members, cracked welds, missing or loose hardware, and corrosion.

Appropriate corrective action, in accordance with sound engineering practices, should be taken to correct detected deficiencies. Repairs should be made within a reasonable time frame, commensurate with the extent of the deficiencies found. Temporary remedial actions, up to and including complete removal of the structure, may be appropriate until permanent repairs can be accomplished. Written documentation of corrective actions should be kept.

All signal supports shall be inspected at a maximum five-year interval. New signal supports shall be inspected at the time of construction.

Intentionally blank.

430 PLANNING / PROGRAMMING

This area has been reserved to address, as needed, planning and programming information related to traffic control signals.

Intentionally blank.

440 DESIGN INFORMATION

440-1 General

The **L&D Manual Volumes One and Three** and ***Section 140*** provides general background regarding design information for **ODOT** projects, including the three-stage review process typically used for traffic control plans. Additional design information has been provided in this chapter, including checklists for Stage 2 and 3 submittals ***(see Section 440-7)***. See ***Section 441*** for additional information specifically related to plan preparation. Plan Notes are addressed in ***Section 442*** and ***Section 443*** provides a listing of related **CMS** Items.

440-2 Electrical Power for Traffic Signals

Traffic signals should, whenever possible, each be powered from a separate, independent power source point arranged with the power company. This should be a 120 volt (two-wire) service of adequate ampacity for the predicted loads. A 120/240 volt, three-wire, service should only be considered when it will also be used to power a few roadway luminaires at the intersection, and in this case, disconnects shall be arranged so that it is possible to disconnect the lighting circuit for repairs without disturbing signal operation.

SCD TC-83.10 addresses pole mountings for controllers and power service.

Provision of traffic signal power service will cover the same general considerations as designated for separate independent sign lighting power services ***(Section 240-7.7, 1 and 3).*** The availability of power at various locations in the intersection may tend to make some locations more favorable for the controller mounting.

Plan Note 442-2 ***(see Section 442-2)*** should be included on projects with traffic signals. The name and address of the power company and voltage to be supplied shall be specified in the appropriate blanks.

440-3 Single-Arm Overhead Signal Support

Various types of overhead signal supports are depicted in ***Table 497-4.*** In designing a single-arm overhead signal support, the following instructions are used in conjunction with **SCD TC-81.20**:

1. Determine the approximate arm length as the horizontal distance from the pole flange plates to a point 1 foot (0.3 meter) beyond the most remote attachment (signal or sign).

2. Locate each signal or sign on the arm. Select the proper load factor for each signal head from ***Table 497-5*** (metric values are in parentheses), and for a sign see item d.

    a. Signal head values in ***Table 497-5*** are for one-way heads. For two-way, three-way or four-way heads, add the values for each face (each one-way head).

    b. Polycarbonate signals may be used only with specific permission from the maintaining agency. If weights are added to signal heads, add that value to the load factors.

    c. For rigid attachment with pipe backbracing per **SCD TC-85.20**, adjust the signal head load factor (L) by adding the value shown in the last column of the chart. This does not apply to optically programmed signals.

    d. The load factor (L) for a sign is the factor given, multiplied by the area in square feet plus 10

(4.5), for example, for an aluminum sign L = 1.2A + 10 (for English units and where A is the area).

Sign Type	Factor
Aluminum	1.2 (39.1)
Internally Illuminated	8 (39.1)
Blankout	16 (78.2)

e. When backplates or disconnect hangers are specified, make the following adjustment to the signal head load factor (L):

Load Factor Adjustments	
Backplates	+6 (+2.7)
Disconnect Hanger	+12 (+5.5)

3. Calculate the load moment design factor (K) by multiplying each load factor (L) by the distance (b) from its attachment point to the pole centerline and add the products.

$K = b_1L_1 + b_2L_2 + b_3L_3$

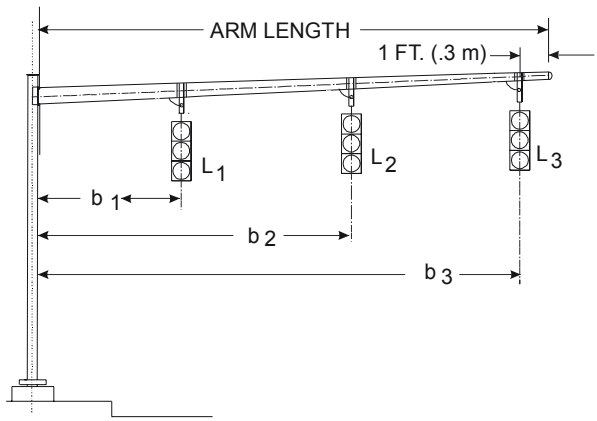

4. Select the proper design based on arm length and load moment design factor (K) from the design chart shown in ***Figure 498-35***.

5. If the signal installation includes rigidly mounted aluminum signs or rigidly mounted signals with backplates, the following additional check should be made. Calculate an area moment factor by multiplying each sign area (or 6 square feet (0.6 square meters) for backplates) by the distance from the centerline to the centerline of the pole, and add the products.

   This value should not exceed that listed in the following table for the selected design number. If the values are exceeded, the designer shall contact the **District Production Administrator**.

Area Moment Check						
Design No.	1	2	3	4	11	12
Factor	250 (7.08)	320 (9.06)	380 (10.76)	380 (10.76)	450 (12.74)	480 (13.59)

440-4 Two-Arm Signal Support Design

Various types of overhead signal supports are depicted in ***Table 497-4.*** To determine arm and pole sizes for the two-arm signal supports where the arms are approximately at 90 degrees (± 15 degrees), proceed as follows:

1. Considering each arm as a single arm signal support, follow the design instructions noted in ***Section 440-3*** for **SCD TC-81.20**.

2. Using the arm sizes detailed for the **SCD TC-81.20** design numbers selected in step 1, use the following chart to select the pole size required.

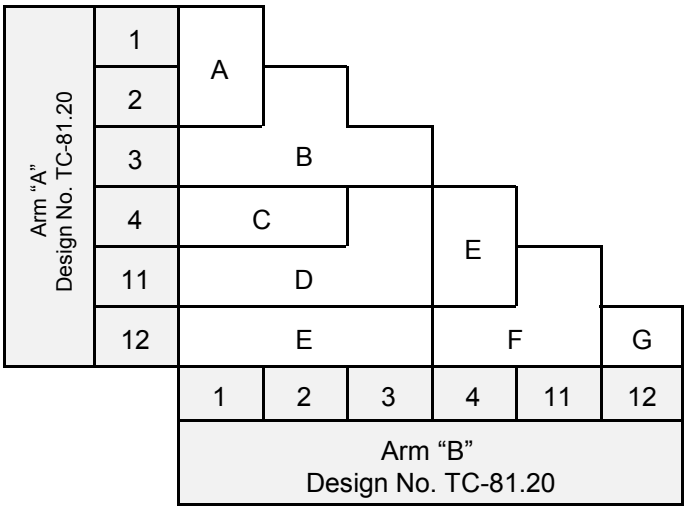

Where the following defines the related pole designations:

Pole Designations		
A	TC-81.20	DES 3
B	TC-81.20	DES 4
C	TC-81.20	DES 11
D	TC-81.20	DES 12
E	TC-12.30	DES 5
F	TC-12.30	DES 6
G	TC-12.30	DES 7

3. The **SCD TC-81.20 or TC-12.30** design number for the pole shall be used in the plans as reference for the proper pole base and foundation details.

4. **SCD TC-81.20** will apply for arm details and arm attachments.

5. ***Section 441-10*** provides a recommended bid item description for a two-arm signal support.

440-5 Span Wire Signal Support Design Software

ODOT has developed a software program to calculate the moment at the base of a strain pole for

various span wire configurations. The base moment is compared to **SCD TC-81.10** to select an adequately sized strain pole for the spanwire configuration analyzed. The software program is available to consultants and local jurisdictions by contacting the **Office of Traffic Engineering**.

440-6 Traffic Signal Timing Analysis and Simulation Software

ODOT has a statewide license for its employee's use of Synchro (signal timing and coordination) and SimTraffic (simulation) software. The latest version of the software can be downloaded from the developers web site at www.trafficware.com. Prior to downloading the software, **ODOT** personnel should contact the **Office of Traffic Engineering** for the product key that must be entered to enable the software.

440-7 Stage 2 and 3 Plan Submittals

The following information has been provided here as checklists for Stage 2 and 3 plan submittals.

1. Stage 2 Plan Requirements (PDP Step 9 Major Projects/ Step 5 Minor Projects):

    a. Base plan drawn to a scale of 1 inch equals 20 feet.

    b. Traffic signal pole locations and skew angles, if required. Reference numbers for all poles.

    c. Signal head locations and direction. Identify signal heads having turn arrow lenses, louvers or special optically programmed features. Signal head sizes. Reference numbers for all signal heads.

    d. Signal controller location and orientation.

    e. Detector locations and detector table.

    f. Underground conduit and pull boxes.

    g. Overhead sign locations, whether on signal spans, mast arms or located on separate supports.

    h. Legend for symbols used.

    i. Pavement marking pertinent to the signal operation.

    j. Signal phasing diagram, display chart and signal timing.

    k. Handicap ramp locations.

    l. Right-of-Way lines.

    m. Corporation lines.

    n. Any existing features to be incorporated into the new signal.

    o. Other physical features within the intersection and sidewalk area which may conflict with traffic flow, pedestrian flow or sight distance.

2. Stage 3 Plan Requirements (PDP Step 11 Major Projects/ Step 7 Minor Projects/ Step 2 Minimal Projects):

    a. General Notes.

    b. Estimated quantities.

    c. Special details.

    d. Pole orientation chart.

    e. Wiring diagram.

f. Coordination timing

For Minimal Projects, Stage 3 plans include all the requirements of Stage 2 plans.

Intentionally blank.

441 PLAN PREPARATION / PRODUCTION

441-1 General

The **L&D Manual Volume Three** and ***Section 140*** generally describe **ODOT** plan preparation and production guidelines. Additional information is provided in this section and ***Section 440*** regarding traffic signal items in plans.

441-2 Signal Plan Layout

Details shall be shown in a plan for every signal on the project. The traffic signal layout on the roadway shall be shown at 1"= 20' (1:200) scale, and shall include roadway base lines and the following, located by station and offsets or other approved method when appropriate:

1. Traffic signal pole (mast arm or span wire) locations (and skew angles if required). Reference numbers shall be shown for all poles.

2. Signal head locations and direction.

   a. Identify heads having turn arrow lenses, louvers or special optically programmed features.

   b. Show signal sizes (if variable).

   c. Show reference numbers for all signal heads (vehicle and pedestrian).

3. Signal controller location and orientation.

4. Detector locations and detector chart ***(Form 496-4)***.

5. Signal phasing diagram and display chart.

6. Timing shall be shown for all signals. This shall include: settings for actuated controllers, and cycle length, splits and offsets (or time space diagrams) for all interconnected signals. See ***Forms 496-3 and 496-5*** for typical signal timing charts.

7. Wiring diagrams shall be shown for each intersection. They shall indicate type of cable and number of conductors connecting each signal head, pedestrian head, detector, pushbutton, etc.

8. Legend for symbols used.

9. Underground conduit and pull boxes.

10. Overhead sign locations, whether on signal spans, mast arms or located on separate supports.

11. Pavement marking pertinent to the signal operation.

12. Handicap ramp locations.

13. Right-of-way lines.

14. Corporation lines.

15. Any existing features to be incorporated into the new signal. Any decision to reuse equipment must be based on a field check of the structural integrity and condition of the devices and

agreement with the maintaining agency.

16. Other physical features within the intersection and sidewalk area which may conflict with traffic flow, pedestrian flow or sight distances.

The Traffic Signal Stage 3 check list is given in ***Form 496-2***.

441-3 Signal and Sign Supports

The following location requirements apply to Stage 2 Plans:

1. Consider sight distance conflicts between signals and overhead signs included within the project, as well as other visibility obstructions. Signals take precedence for prime locations.

2. Combine signal, sign and/or light poles where practical; in so doing the support shall be a signal support bid item.

3. Distance from Stop Line to signal heads shall be in accordance with **OMUTCD Sections 4D.15 and Figure 4D-2**. Stop Lines shall be located to suit geometric conditions, then signal head locations provided to suit.

4. Minimum lateral clearances to pole or signal equipment attached thereto:

   a. 30 feet (9.0 meters) from roadway edge, or as called for in the clear zone criteria described in **L&D Manual Volume One, Figure 600-1** if design speeds are 40 miles per hour or higher.

   b. 6 feet (2 meters) outside paved shoulders, or 12 feet (4 meters) from the roadway edge in uncurbed sections, whichever is greater.

   c. 2 feet (0.6 meter) outside barrier curbs. Barrier curbs are relatively high (6 inches or more) and steep-faced.

   d. Behind sidewalks where encountered, if physically possible.

   e. Behind existing guardrail wherever possible, with a minimum clearance of 6 feet (2 meters) from the face of guardrail to the centerline of the support.

5. Determine the exact location by station to the nearest 1 foot (0.3 meter). This information will be needed in Stage 3 Plans.

441-4 Power Service

Tentative power service locations shall be specified as needed on the plans either on the signal support or at separate service poles (separate bid item). The contractor's work will generally consist of providing sufficient length of two-wire power cable out of the weatherhead, to which the power company will make their attachments and connections. See ***Section 450-9*** for the measurement of power and service cables.

See ***Section 440-2*** for design information on electrical power for traffic signals. Prior to filing the tracings, the design agency shall confirm in writing, agreements made with the power company, to the **District Production Administrator** and **City Traffic Engineer** (if applicable).

441-5 Underground Facilities

Conduit runs shall usually be limited to 200 feet (60 meters) between pull boxes, but up to 400 feet (120 meters) may be used if the run is straight and not too full.

Conduit crossing bridge structures shall, if possible, be included in parapets. As an alternative, it may be attached to the underside of the parapet by means of clamps. Necessary flexible conduit at expansion joints shall be provided.

Conduit under the roadway shall be a minimum of 3-inch (76 mm) diameter. All conduit shall be of sufficient size to contain the conductors as per the **National Electric Code**. See ***Section 450-3.4*** for additional information.

441-6 Quantities

In the General Summary, all quantities should be shown in whole units of measurement, except concrete which shall be shown to a tenth of a cubic yard (hundredth of a cubic meter) and any pavement marking item measured in miles (kilometers), which shall be shown to a hundredth of a mile (hundredth of a kilometer).

On metric plans, sign area shall be shown in tenths of a square meter and support lengths shall be shown in tenths of a meter.

441-7 Bid Item Descriptions

Bid item descriptions are required to exactly match the descriptions published in the "Bid Item Dictionary."

When the standard bid item description is inappropriate, the words "As Per Plan" shall be added to the description, and a note shall be provided to describe the deviation from the standard specifications and/or details. See ***Section 442*** for examples of typical **Plan Notes**.

441-8 Signal Support, Detail Design Requirements

Figures 498-37 and 498-38 provide examples of tables for presenting signal support information in the plans for support types described in **SCDs TC-81.10 and TC-81.20**.

Use of the sample tables is recommended as a means of uniformly presenting support information to the contractor or support manufacturer. The support designer should note that the orientation angles consist of:

- A field angle that establishes the angular relationship between the project centerline perpendicular and a pole feature (handhold or mast arm) which serves as an index, and
- Angles for all pole appurtenances that are measured from this index pole feature.

Complete instructions for designing the single arm overhead signal support described in **SCD TC-81.20** are contained in ***Section 440-3***. Instructions for the design of two-arm signal supports are contained in ***Section 440-4***.

The following information relates to the detail design of signal supports for Stage 3 plans.

1. Foundation elevations and span wire attachment heights are optional for signal strain poles. Top and bottom foundation elevations should be provided if foundation dimensions are not as shown on **SCD TC-21.20**, or when steep roadside slopes or roadway superelevation would make

foundation elevations difficult to otherwise determine.

2. Station and offset information is not necessary for signal strain poles in the strain pole table. Poles should be clearly labeled and locations dimensioned on the signal intersection sheets.

3. Do not give conduit angles for foundations because these will be field located by the contractor according to the plans and field conditions. An exception would be for unused, capped conduit ells for future use.

4. A column may be added to define the street from which the centerline and angles are determined.

5. For a project with many installations, a column for cross reference to the signal or sign plan sheet should be added.

6. Elevation views of the signal spans are optional. However, if elevation views are not used, span dimensions between signal heads and signs shall be shown on each signal intersection sheet.

7. Strain poles **(SCD TC-81.10)** can typically be located with the base plate either square or at 45 degrees to the roadway centerline. The pole and foundation are designed for loading in any direction and the anchor bolts do not need to be located exactly in line with the resultant span wire load.

8. If two pedestrian signal heads are located on a pole, the designer must choose between a single mounting bracket for two heads or separate mounting brackets for each head. Also, **SCD TC-85.10** allows field installation of holes with alternate mounting methods instead of threaded blind half couplings. The maintaining agency's choice of mounting method should be clearly noted in the plans.

9. If luminaire bracket arm attachment plates are required, a column should be listed in the table to show the orientation angles. The plan should note whether one or two plates are required. The power company or maintaining agency should be contacted concerning any special mounting attachment requirements. **ODOT** standards are shown on **SCD HL-10.12**.

441-9 Power Service Cable

In **CMS 732**, power cable and service cable are specified primarily as aluminum conductors. This was done because aluminum is typically most cost effective in these sizes, and more readily available. The specification allows the substitution of copper conductors of one size smaller. This is because the greater conductivity and lower resistance of copper approximately accounts for one wire size. For instance, a #8 AWG copper conductor with an ampacity of 45 AMPs may be substituted when the plan calls for a #6 AWG aluminum conductor which would have an ampacity of 50 AMPs.

This relationship is considered acceptably close for the required usage. The specifications call for appropriate connectors to match wire material.

There is a potential problem if the designer uses a specific size of copper power cable, or copper service cable, out of habit, without recognizing that the change to aluminum has effectively reduced ampacity of these cables by 12 to 25 percent.

A similar relationship exists for cases where long runs of power cable or service cable require consideration of voltage drop.

Under **CMS Item 632** and **CMS 732**, power and service cables should be sized to the following minimums:

Total Control Load (AMPS)	Aluminum Wire Size (AWG)
20	#10
30	#8
45	#6
65	#4

Also note that aluminum service cable (duplex or triplex) is not readily available in smaller than #8 AWG.

441-10 Two-Arm Signal Supports

Section 440-4 describes the procedure for designing a two-arm signal support. As noted in that section, the **SCD TC-81.20 or TC-12.30** design number for the pole may be used in the plans as reference for the proper pole base and foundation details. **SCD TC-81.20** will apply for arm details and arm attachments.

The bid item for the structure should be in the form:

> Item 632 (Combination) Signal Support, Type (TC-12.30 or TC-81.20) Design __ Pole, with Mast Arms TC-81.20 Design __ and TC-81.20 Design __

A detailed elevation view and any other special details required for the two-arm support that are not covered by the **SCD** should be included in the plans.

441-11 Guarantees

For projects not requiring detail guaranteeing, the requirements of **CMS Item 633** will apply. On traffic control projects or other projects where the cost for traffic control is more than one-third of the total cost, **Plan Note** based on ***Section 442-16*** may be included. The period of guarantee should be adjusted in relation to equipment complexity, i.e., 90 days for simple equipment, 120 days for traffic adjusted equipment and a maximum of 180 days for computerized control of many intersections. When the note is included, notice of the fact should be communicated in the transmittal of final tracings to **Central Office**, so that affected groups may make provision in the proposal for the extended completion date.

441-12 Alternate Bids

The use of alternate bidding procedures must be requested and the maintaining agency must agree in writing to the procedure. Alternate bids are typically used for projects where a particular type or brand of equipment is desired, usually the signal controller. ***Section 442-16*** presents an example of an alternate bid note **(Plan Note 442-16)** setting up an alternate bid item in the plans. This note should be placed in the plans at the end of the general notes for traffic signal items. In the general summary, the alternate bid item should be at the end of the list of traffic signal items.

Intentionally blank.

442 PLAN NOTES

442-1 General

Typical **Plan Notes** have been consolidated here for convenience in preparing plans. The number used for the **Plan Note** will be the same as the section number. When a **Plan Note** revises the material or contractor requirements from that which is specified in the **CMS**, both the note and the bid item will be "as per plan". Where there are design instructions pertaining to a specific note, they are listed at the end of the note. These notes may be modified to further define the conditions of a project or maintaining agency.

In keeping with traditional format of **Plan Notes**, various format changes are used here that are not typical throughout the **TEM**, e.g., the terms Contractor and Engineer are capitalized.

Also, at this time the Plan Note number that has been used is shown in parentheses at the beginning of the title for the note.

442-2 Power Supply for Traffic Signals

Electric power shall be obtained from the _____ at the location indicated on the plans. Power supplied shall be ____ volts.

Designer Note: See ***Sections 440-2 and 441-4***.

442-3 625, Ground Rod, As Per Plan

In addition to CMS Item 625.09, this item shall consist of furnishing and running of a seven strand #4 copper wire from the top of the ground rod and attaching it to the neutral bar in the cabinet.

Payment shall be made at the contract unit price per each.

Designer Note: This note may be used when requested by the maintaining agency.

442-4 632, Removal of Traffic Signal Installation

Traffic signal installations, including signal heads, cable, messenger wire, strain poles, cabinet, controller, etc., shall be removed in accordance with CMS 632.26 and as indicated on the plans. Removed items shall be reused as part of a new installation on the project or stored on the project for salvage by (name of agency receiving stored items) in accordance with the listing given herein.

(Items to be reused)

(Items to be stored)

In the event the items stored on the project for salvage by the local agency are not removed, the Contractor shall, when directed by the Engineer in writing, remove and dispose of the items at no additional cost to the project.

Designer Note: This note shall be included on projects where existing traffic signal installations are being removed. A listing of items to be reused and/or stored must be included.

442-5 632, Interconnect Cable, Misc.: (by Size), with Support Messenger, As Per Plan

The Contractor will be permitted to use either of two types of interconnect cable construction and installation under this item as follows:

1. Integral messenger type interconnect cable meeting the requirements of CMS 732.19. Under this method any sections of cable shown in the plans to be contained in controllers, cabinets, poles, conduits or supported on messenger wire installed for other purposes shall have the supporting messenger and jacket web neatly removed by the use of a tool specifically designed and sized for this purpose. Deviations from the cable routing shown in the plan, for the sole purpose of reducing the amount of messenger to be removed, will not be permitted. The cable shall be installed with approximately one twist for each 15 feet (4.5 meters) of span length.

2. Separate interconnect cable meeting the requirements of CMS 732.19 plus a 1/4 inch (6 millimeters) messenger wire and lashing meeting the requirements of CMS 732.18. Under this method the Contractor will install a separate 1/4 inch (6 millimeters) messenger to support the spans of interconnect cables in all locations where the plans show interconnect cable which is not otherwise supported by a signal messenger wire or other suitable support. Utilization of existing messenger wire, not provided by the project or designated therein as available for use, is prohibited. Deviation from the cable routing shown in the plans, for the purpose of reducing the need for separate messenger wire, will not be permitted.

In either case the number of splice locations shall be kept to a minimum.

Measurement will be based upon the number of feet (meters) of CMS Item 632, "Interconnect Cable, Misc.: (by size), with Support Messenger, As Per Plan" in place in accordance with the method described in CMS 632.29 and no separate payment will be provided for any separate messenger wire used to support interconnect cables.

Designer Note: This note may be used on projects with overhead interconnect cable, if acceptable to the maintaining agency.

442-6 632, Loop Detector Units, by Type, As Per Plan

In addition to the requirements of CMS Item 632 and CMS 732.07 or 732.08, loop detector units shall have the following requirements or features:

The output device shall be a relay, and all contacts shall be in the wiring harness.

The unit shall be self tuning.

The unit's electrical connection plugs or wiring harness shall allow ready replacement with a single channel amplifier as described in CMS 732.07.

Each unit shall be labeled to correspond to its phase and direction.

Delay inhibit shall be connected on all detector harnesses for their respective phase greens.

Designer Note: This note should be included for projects which will be maintained by **Districts** that use **NEMA** TS-1 controller cabinets.

442-7 632, Vehicular Signal Head, Polycarbonate, by Type, As Per Plan

CMS 732.01 is modified for this project as follows:

1. Signal heads and visors shall be constructed of polycarbonate plastic and meet ITE specifications.

2. Glass lenses shall be used.

3. Pipe, spacers and fittings constructed of polycarbonate plastic may be used in lieu of galvanized steel or aluminum.

4. Proper exterior colors shall be obtained by use of colored plastic material rather than painting.

Designer Note: This note should be included when polycarbonate heads are specified.

442-8 632, Pedestrian Signal Heads, by Type, As Per Plan

CMS 732.05 of the specifications is modified for this project as follows:

1. Signal heads and visors shall be constructed of polycarbonate plastic and meet ITE specifications.

2. Plastic lenses shall be used.

3. Pipe, spacers and fittings constructed of polycarbonate plastic may be used in lieu of galvanized steel or aluminum.

4. Proper exterior colors shall be obtained by use of colored plastic material rather than painting.

Designer Note: This note should be included when polycarbonate heads are specified.

442-9 632, Loop Detector Lead-In Cable, Direct Burial

This work shall include furnishing and installing loop detector lead-in cable of the type required in CMS 732.19. Installation shall be by cable plow or vibratory cable plow to a minimum depth of 18 inches (450 millimeters). All entries into pull boxes, conduit systems, foundation or other enclosures shall be free of sharp edges and be covered by insulated bushings. Following installation, the ground surface shall be restored to the original contour and surface condition.

Designer Note: This method may be considered in lieu of cable in conduit to reduce project costs. It is applicable to long underground runs in tree lawns or grassed roadsides where minimal interference with driveways or utilities is expected, and where disturbance of the area due to construction is not contemplated. If the cable is to be routed up a pole, a conduit riser (extending below ground with an insulated bushing) should be called for and detailed.

442-10 632, Combination Signal Support, Type TC-81.20 and Sign Support, TC- (with Light Pole Extension)

This support shall consist of a TC- _____ Design ___ pole with a TC-81.20 Design ___ signal arm and a TC- _____ Design ___ sign support arm (with light pole extension). All signal support items required by CMS Item 632 and all sign support items required by CMS Item 630 shall be included as part of this support.

Payment will be at the contract unit price and will be full compensation for all labor, materials, tools, equipment and other incidentals necessary for each support furnished, in place, complete and accepted.

Designer Note: This note shall be used when combination traffic signal supports and sign supports are desired. The blanks shall be filled in with appropriate **SCD** numbers and designs.

442-11 632, Combination Strain Pole, Type TC-81.10 and Sign Support, Type TC- (with Light Pole Extension)

This support shall consist of a TC- _____ Design ___ pole with a TC- _____ Design___ sign support arm (with light pole extension). All signal support items required by CMS Item 632 and all sign support items required by CMS Item 630 shall be included as part of this support.

Payment will be at the contract unit price and will be full compensation for all labor, materials, tools, equipment and other incidentals necessary for each support furnished, in place, complete and accepted.

Designer Note: This note shall be used when combination traffic signal supports and sign supports are desired. The blanks shall be filled in with appropriate **SCD** numbers and designs. The following is a bid item example: Combination Strain Pole, Type TC-81.10 and Sign Support, Type TC-12.30 (with Light Pole Extension).

442-12 Strain Pole Foundation Elevations

Elevations shown in the plans for strain pole foundations are for computational purposes only. The actual elevation of the foundation shall be in accordance with SCD TC-21.20 provided the existing slope is less than 6:1.

At locations where the existing slope is 6:1 or greater, the buried depth of foundation, as shown in SCD TC-21.20 shall apply to the low side of the slope. The top of the foundation shall be set 2 inches (50 millimeters) above the existing surface on the high side of the slope. The additional depth of foundation necessary to meet these requirements shall be added to the formed top.

Designer Note: This note shall be used when strain pole foundations are located in slopes of 6:1 or greater.

442-13 632, Vehicular Signal Head, by Type, As Per Plan

In addition to the requirements of CMS Item 632 and CMS 732, the following requirements shall apply:

1. All upper signal support hardware and piping up to and including the wire inlet fitting shall be ferrous metal for signal displays of two or more sections.

2. When signal heads are suspended from span wires or mast arms and not rigidly mounted they shall be provided with a pivot and lock balance adjuster.

3. All balance adjusters shall have a minimum three-quarter inch (19 millimeters) eye bolt and three-quarter inch (19 millimeters) wide slot. Eye bolts are cast from 316 stainless steel and provided with a satin finish. Three-quarter inch (19 millimeters) body halves are cast from a minimum 65-45-12 ductile iron and provided with a bright zinc finish (ZN1). Balance adjusters shall only be used where necessary. Balance adjusters shall be used on one-way heads.

4. Glass lenses shall be used.

5. The entrance fitting shall be of the tri-stud design with serrated rings in order to achieve positive locking.

Designer Note: This note should be included for projects which will be maintained by **ODOT**.

442-14 632, Power Service, As Per Plan

Power service shall be as per CMS Item 632 and SCD TC-83.10 with the following exceptions:

1. The meter base mounting height shall be no more than 5 feet (1.5 meters) high to the center of the meter base from the ground.

2. The Contractor shall supply the necessary meter bases.

3. All power services shall be metered. The meter shall have a lever operated bypass.

Disconnect switch enclosures furnished in accordance with CMS Item 632, Power Service, as per plan, shall include a padlock equal to Master no. 4BKA or Wilson Bohannon 660, with lock body of bronze or brass and keying shall be to the state master.

The Contractor shall contact the meter section of the power company for information regarding the meter base installation prior to ordering poles. The Contractor will be responsible for requesting and scheduling any inspections the power company may require for the power service hook up. The Contractor shall be responsible to contact the power company for the electrical service connection. Under no circumstances shall the Contractor splice power cable into the power company's circuits. The voltage supplied shall be nominally 120 volts. The Contractor is responsible for obtaining any necessary permits and the paying of all fees. The Contractor shall pay all power charges until the signal is accepted by the maintaining agency.

Designer Note: This note may be used when requested by the maintaining agency.

442-15 Guarantee

The Contractor shall guarantee that the traffic control system installed as part of this contract shall operate satisfactorily for a period of _____ days following completion of the 10-day performance test. In the event of unsatisfactory operation the Contractor shall correct faulty installations, make repairs and replace defective parts with new parts of equal or better quality. Equipment, material and labor costs incurred in correcting an unsatisfactory operation shall be borne by the Contractor.

The guarantee shall cover the following items of the traffic control system: controllers and associated equipment, detector units, interconnection items and master control equipment.

Customary manufacturer's guarantees for the foregoing items shall be turned over to the state or the maintaining agency following acceptance of the equipment.

The cost of guaranteeing the traffic control system will be incidental to and included in the contract unit price of the various items making up the system.

Designer Note: See ***Section 441-11***.

442-16 633, Alternate Bid Item

633 Controller Unit, Type___, with Cabinet, Type ___

(Example of a standard bid item)

633 Controller Unit, Type ___, with Cabinet, Type ___ (Acme) - Alternate Bid

The controller shall be a Model (xx-99 as manufactured by Acme Signal Company, Santoy, Ohio) and shall incorporate or be furnished with all the design features, auxiliary equipment, accessories, and prewired cabinet features as required in the standard bid item.

Payment will be at the contract unit price for each, in place, all connections made and wiring completed, tested and accepted.

(Example of an alternate bid item)

Designer Note: See ***Section 441-12***.

442-17 632 Vehicular Signal Head with LED Lamp Units, By Type, As Per Plan

In addition to the requirements of CMS 632 and 732, the following requirements shall also apply:

Lamps:
LED, light emitting diode, signal lamp units shall meet the requirements of Supplemental Specification 872. All lamp units shall be the 12 inch (300 millimeter) size. LED signal lamp units shall be provided for [all signal lens types] [the following lens types: circular RED, circular YELLOW, circular GREEN, YELLOW arrow, GREEN arrow].

Signal Sections: *(if polycarbonate signal heads are to be required, include items 1 thru 3)*
1. Signal heads and visors shall be constructed of polycarbonate plastic and meet ITE specifications.
2. Pipe, spacers and fittings constructed of polycarbonate plastic may be used in lieu of galvanized steel or aluminum.
3. Proper exterior colors shall be obtained by use of colored plastic material rather than painting. [#. Glass lenses shall be used for any lenses not using an LED lamp.]

Mounting Hardware: *(select items as needed)*
[#. All signal heads shall be rigidly mounted to the mast arm with the (color) lens located in front of the mast arm.]
[#. All upper signal support hardware and piping up to and including the wire inlet fitting shall be ferrous metal for signal displays of two or more sections.]
[#. The entrance fitting shall be of the tri-stud design with serrated rings in order to achieve positive locking.]
[#. When signal heads are suspended from span wires or mast arms and not rigidly mounted they shall be provided with a pivot and lock balance adjuster. All balance adjusters shall have a minimum three-quarter inch (19 millimeter) eye bolt and three-quarter inch (19 millimeter) wide slot. Eye bolts are cast from 316 stainless steel and provided with a satin finish. Three-quarter inch (19 millimeter) body halves are cast from an minimum 65-45-12 ductile iron and provided with a bright zinc finish (ZN1). Balance adjusters shall only be used where necessary. Balance adjusters shall be used on one-way heads.]

The Contractor shall provide ODOT, in writing, the LED manufacturer name, serial number, part number, description of lamp, and date of manufacture for all LED units to be used in the traffic

signal heads prior to installation, for acceptance and warranty purposes. The information shall be sent to the following location:

ODOT District #
Attn:
Address

The Department will measure "Vehicular Signal Head with LED Lenses, By Type, As Per Plan" by the number of complete units furnished and installed, and will include all support and mounting hardware, disconnect hangers, closure caps, dimmers, and lamps as specified.

Designer Note: Since maintaining agencies will use different combinations of LED/incandescent lamp and aluminum/polycarbonate signal sections, this note will allow the designer to choose the various options that will provide the maintaining agency with features that they prefer. Items that are enclosed in brackets [ ] should be carefully considered and retained or deleted based on maintaining agency preferences. Care should be taken not to include duplicate requirements for the same item. Some designer notes are in italics.

442-18 632 Pedestrian Signal Head with LED Lamp Units, Type A2, As Per Plan

In addition to the requirements of CMS 632 and 732, the following requirements shall also apply:

1. LED, light emitting diode, signal lamp units shall meet the requirements of Supplemental Specification 872. All lamp units shall be the 12 inch (300 millimeter) size.
2. The LED lamp unit shall display the symbols for the Upraised Hand or the Walking Person.

(if polycarbonate signal heads are to be required, include the following items)

[3. Signal heads and visors shall be constructed of polycarbonate plastic and meet ITE specifications.]
[4. Pipe, spacers and fittings constructed of polycarbonate plastic may be used in lieu of galvanized steel or aluminum.]
[5. Proper exterior colors shall be obtained by use of colored plastic material rather than painting.]

The Contractor shall provide ODOT, in writing, the LED manufacturer name, serial number, part number, description of lamp, and date of manufacture for all LED units to be used in the traffic signal heads prior to installation, for acceptance and warranty purposes. The information shall be sent to the following location:

ODOT District #
Attn:
Address

The Department will measure "Pedestrian Signal Head with LED Lamp Units, Type A2, As Per Plan" by the number of complete units furnished and installed, and will include all support and mounting hardware, closure caps, and lamps as specified.

Designer Note: Since maintaining agencies will use different combinations of LED/incandescent lamp and aluminum/polycarbonate signal sections, this note will allow the designer to choose the various options that will provide the maintaining agency with features that they prefer. Items that are enclosed in brackets [ ] should be carefully considered and retained or deleted based on maintaining agency preferences. Care should be taken not to include duplicate requirements for the same item. Some designer notes are in italics.

442-19 632 Relamp Existing Signal Section with LED Lamp Unit, By Lens Type, As Per Plan

This item of work shall consist of replacing the 12 inch (300 millimeter) lens and incandescent lamp in an existing signal head section with a 12 inch (300 millimeter) LED lamp unit.

The light emitting diode (LED) signal lamp units shall meet the requirements of Supplemental Specification 872. An LED signal lamp unit shall be furnished and installed for the type of signal lens specified in the bid item description.

[The existing reflector unit and lens shall be removed and returned to the maintaining agency. The existing incandescent lamp shall be disposed of by the contractor.]

The Contractor shall provide ODOT, in writing, the LED manufacturer name, serial number, part number, description of lamp, and date of manufacture for all LED units to be used in the traffic signal heads prior to installation, for acceptance and warranty purposes. The information shall be sent to the following location:

ODOT District #
Attn:
Address

The Department will measure "Relamp Existing Signal Head with LED Lamp Units, By Lens Type, As Per Plan" by the number of complete units furnished and installed, and will include all hardware and lamps as specified.

Designer Note: Since maintaining agencies will use different combinations of LED/incandescent lamp and aluminum/polycarbonate signal sections, this note will allow the designer to choose the various options that will provide the maintaining agency with features that they prefer. Items that are enclosed in brackets [ ] should be carefully considered and retained or deleted based on maintaining agency preferences. Care should be taken not to include duplicate requirements for the same item.

442-20 632 Controller Unit, Type 170E, with Cabinet, Type (332 or 336), As Per Plan

The 412C prom module for the local controller shall be supplied without controller software to the ODOT District Office 14 days in advance of when the software is needed. The prom modules shall be configured for Wapiti software and include a blank eprom for program installation. ODOT will install the local controller software program. The Contractor shall pick up the prom modules with the installed software from District. It shall be the Contractor's responsibility to use the retruned prom modules to program the signal controllers per the plans.

The Contractor shall not reassign the detector inputs in order to reduce the number of 2-channel detector units supplied, but shall use the standard CalTrans input file designations

Designer Note: This note should be used at signalized intersections using Type 170E local controllers that are to be owned and maintained by **ODOT**.

442-21 632 Controller Unit, Type 2070, with Cabinet, Type (332 or 336), As Per Plan

The Type 2070 local controller shall be supplied without controller software, but will be supplied with the operation system and CalTrans required software. The controller unit shall be delivered to the ODOT District Office 14 days in advance of when the software is needed. ODOT will install the local controller software program. the contractor shall pick up the controller unit with the installed software from District. It shall be the Contractor's reponsibility to program the Type 2070 signal controllers per the plans

The Contractor shall not reassign the detector inputs in order to reduce the number of 2-channel detector units supplied, but shall use the standard CalTrans input file designations.

Designer Note: This note should be used at signalized intersections using Type 2070 local controllers that are to be owned and maintained by **ODOT**. If a Type 332 or 336 cabinet is not being used, delete the paragraph concerning detector inputs.

442-22 632 Controller, Master, Traffic Responsive, As Per Plan

The 412B2 prom module for the Type 170E master controller shall be supplied without controller software to the ODOT District Office 14 days in advance of when the software is needed. The prom modules shall be configured for Wapiti software and include a blank eprom for program installation. ODOT will install the master controller software program. The Contractor shall pick up the prom modules with the installed software from District. It shall be the Contractor's responsibility to use the returned prom modules to program the signal controllers per the plans.

Designer Note: This note should be used at signalized intersections using Type 170E master controllers that are to be owned and maintained by **ODOT**

442-23 632 Controller, Master, Traffic Responsive, As Per Plan

The Type 2070 master controller shall be supplied without controller software, but will be supplied with the operating system and CalTrans required software. The controller unit shall be delivered to the ODOT District Office 14 days in advance of when the software is needed. ODOT will install the master controller software program. the Contractor shall pick up the controller unit with the instaffed software from District. It shall be the Contractor's responsibility to program the Type 2070 signal controller per the plans.

Design Note: This note should be used at signalized intersections using Type 2070 master controllers that are to be owned and maintained by **ODOT**.

Intentionally blank.

443 SPECIFICATIONS

ODOT specifications for the furnishing and installation of traffic signal equipment are contained in the following **CMS** sections:

625 and 725 Trench, conduit, ground rods and pull boxes
632 and 732 Traffic signal equipment
633 and 733 Traffic signal controllers

CMS specifications related to specific traffic signal items have been referenced individually as they have been discussed in this Part.

Intentionally blank.

450 CONSTRUCTION

450-1 General

This information is intended to serve as a guide for construction personnel where the contractor furnishes and installs traffic control devices and appurtenances. However, it may also be useful for maintenance personnel performing the same functions. Inspection procedures for the various type traffic control devices are outlined, mainly in the form of check lists to assist project personnel in performing their duties. This information points out the various important features of each device and references the applicable specification or standard drawing. Illustrations are used for easy recognition of the device or feature being discussed.

450-2 Foundations

See ***Section 250-3*** for additional information relative to concerns in the installation of foundations for poles and controller cabinets.

450-3 Electrical Appurtenances

450-3.1 General

This section will be used to provide additional information about various electrical appurtenances involved in the traffic signal installations, such as pull boxes, conduit and ground rods.

450-3.2 Pull Boxes

Pull boxes shall be of the specified sizes (see **SCD HL-30.11** and the plans), typically 18 inches (460 millimeters) or 24 inches (610 millimeters), and the specified material.

The word on the cover should be “TRAFFIC” when the pull box is part of a traffic signal system unless the plans require the word “ELECTRIC” or other marking. The word shall be formed on the surface or displayed on an attached metal plate in accordance with **CMS 725.09**.

The location of pull boxes shall be as shown on the plans. However, pull boxes in low drainage areas may be adjusted to eliminate drainage problems, or feasible methods of positive drainage may be used in accordance with **CMS Item 603** and details on **SCD HL-30.11**, with the approval of the project engineer.

Pull boxes located in sidewalks, traffic islands and curbed areas close to the roadway, where wide turning vehicles could drive over them, may be adjusted to eliminate the problem, or a concrete pull box with a heavy duty lid may be used with the approval of the project engineer.

450-3.3 Trench

Trenching shall be in accordance with **CMS 625.11** and as shown in ***Figure 498-7***. Any change in dimensions will require approval by the project engineer.

Trenching may be in earth or in paved areas, according to plan details. Trenching and subsequent restoration of surfaces in paved areas shall be in accordance with **SCD HL-30.22**. Trenching work in paved areas shall be divided into two pavement depths for payment; less than 6 inches (150 millimeters) and 6 inches (150 millimeters) or greater, as described in **CMS 625.21**.

The trench in paved areas may be 4 inches (100 millimeters) wide when cut by a Vermeer type

trencher. In this case, the trench shall be backfilled with concrete full depth, except that the bottom 4 inches (100 millimeters) above the conduit may be **CMS 625.11** tamped backfill.

450-3.4 Conduit

Metal conduit shall comply with **CMS 725.04**, with sizes according to the plans. It shall be made from domestically produced steel, and the domestic steel content of the conduit shall be certified by the manufacturer or supplier before it is approved for installation.

The routing of loop detector wire in conduit through curb or under shoulder shall be as shown on **SCD TC-82.10**.

Conduit containing cable and/or wire shall have the terminal at the high end completely sealed in an approved manner, with removable sealing compound or a molded plastic or rubber device compatible with the conduit, cable jacket and wire insulation, according to **CMS 625.12(A)**.

After placement, a conduit which will **not** have cable or wire pulled into it during construction shall have a pull wire installed in it, and the terminal at the high end shall be sealed with removable sealing compound, a molded plastic or a rubber device, according to **CMS 625.12(A)**.

Difficult pulling and possible jacket skinning may occur when an attempt is made to install too many cables or wires within a given conduit. The reason could be design error in new systems or attempts to insert an excess number or size of cable or wire in existing conduit.

Good electrical practice requires that the combined cross section of all cables and wire within a conduit should be less than (or equal to) 40 percent of the conduit inside area:

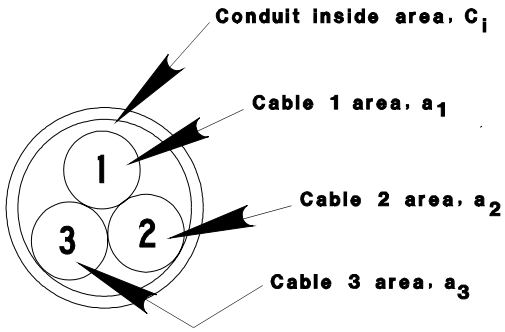

$a_1 + a_2 + a_3 + \text{etc.} \leq 0.40C_i$

a = cable or wire across section area, sq. in. (mm^2)
C_i = conduit inside area, sq. in. (mm^2)

A calculation can be made using the above formula. The cross section area of conduit, cable and wire is shown in ***Table 497-1***.

450-3.5 Ground Rod

A ground rod shall be driven below groundline near the foundation of every strain pole and overhead sign or signal support whether there is power in the vicinity or not, as shown on **SCDs TC-21.20, TC-32.10 and TC-32.11**.

Ground rods shall comply with **CMS 725.16** and be installed in accordance with **CMS 625.09**. A ground wire of insulated 600-volt No. 4 AWG 7-strand soft drawn copper shall be attached by an exothermic weld. The typical exothermic weld procedure is described in ***Section 450-3.6***. Insulating varnish shall be applied to the weld and any exposed conductor.

450-3.6 Exothermic Weld

The following procedure is typical and may be used unless the manufacturer's instructions differ.

1. The end of the ground wire shall be in an unflattened, unbent, clean and dry condition to assure a good weld.

    a. Bent and out-of-round conductor wire will hold the mold open causing weld material leakage. A cable cutter should be used to make undeformed ends. If a hacksaw is used, the insulation should first be peeled, as the saw tends to coat the cable with plastic material which must be cleaned off.

    b. Corroded cable shall be cleaned. Oily or greasy cable should be cleaned with a solvent that dries rapidly and leaves no residue. Very greasy cable can be "cooked out" by dipping into molten solder.

    c. Wet cable can cause the blowing of molten metal out of the mold, and the cable should be dried by a hand torch or a quick drying solvent such as alcohol.

2. Ground rod ends which have been mutilated in driving can hold the mold open and should be cut off. Rod ends shall be clean and dry.

3. The weld mold shall be clean before use. Damp or wet molds can cause porous welds and should be dried by heating.

4. The cable shall be inserted into the side of the mold so the cable is 1/8 inch (3 millimeters) back from the center of the tap hole. The mold shall be placed on the ground rod so the cable sits on top of the rod **(see *Figure 498-8*)**. A clamp or locking pliers should be used on the rod to keep the mold from sliding down during the welding process, and the conductor should be marked at the mold surface so it can be verified that the conductor has not shifted before the weld is made.

5. The steel disk shall be inserted into the crucible and the cartridge contents poured on top, being careful that the disk is not upset. The cartridge should be tapped when pouring, to make sure the starting powder comes out and spreads evenly over the welding powder. A small amount of starting powder should be placed on the top edge of the mold under the cover opening for easy ignition.

    a. The proper cartridge size is marked on the mold tag and is the approximate weight of the powder in grams.

    b. If the proper cartridge size is not available, two or more small cartridges or part of a larger cartridge can be used.

6. The mold cover will be closed and the starting powder ignited with a flint gun. If it is necessary to hold down the cover during the flash of igniting powder, a long tool should be used and the hand should be kept away.

450-4 Power Service for Traffic Signals

450-4.1 General

Power service for traffic signals shall comply with **SCD TC-83.10** and the plans. It shall consist of the equipment needed to provide a pole-attached wiring raceway and disconnect switch, for use with separately furnished power cable routed from the service point to the controller cabinet. As shown in ***Figure 498-9***, unless otherwise specified, the equipment includes a weatherhead, a conduit riser with necessary fittings and attachment clamps when required, and a disconnect switch with enclosure **(CMS 632.24)**.

A thorough review of the plans should be made to determine that the specific requirements of the maintaining agency for power service have been satisfied.

A ground wire shall be used as shown on **SCD TC-83.10**, leading to a ground rod installed in accordance with ***Section 450-3.5.***

The LB type fitting under the controller cabinet **(SCD TC-83.10)** may have to be installed before erecting the pole because of interference with the foundation.

450-4.2 Electric Meter Base

When required, an electric meter base shall be furnished by the applicable utility and installed by the contractor as part of the power service work.

450-4.3 Conduit Riser and Weatherhead

Power cable is the only type cable or wire permitted through the power service conduit riser.

The conduit riser shall terminate at the meter base, if used; otherwise, termination shall be at the switch enclosure. From there conduit connection to the controller cabinet is as shown on the plans. Conduit connection could be: (a) immediately to the controller cabinet on the same pole; (b) downward by underground conduit and possibly a pull box to a nearby foundation-based controller cabinet; or (c) upward by another riser on the pole to spanwire and a remote cabinet location.

The conduit riser shall comply with **CMS 725.04** and the plans, and the weatherhead shall be threaded aluminum or galvanized ferrous metal **(CMS 732.16)**. Risers on painted poles shall be painted to match the poles.

450-4.4 Disconnect Switch

The disconnect switch shall be a **UL** listed single-throw safety switch or circuit breaker, meeting the voltage and capacity requirements of the specifications. The amperage rating of the fuse or circuit breaker shall be 5 to 10 amperes greater than the peak load rating of the equipment service. The enclosure shall be a **UL** listed water tight lockable stainless steel **NEMA** Type 4, supplied with **UL** listed conduit hubs, and the enclosure shall contain a solid neutral bar normally grounded to the enclosure **(CMS 732.21)**.

450-5 Pole and Support Inspection - General

See ***Sections 250-4.2, 4.3 and 4.4*** for information about pole and support inspection.

450-6 Traffic Signal Supports

450-6.1 General

This section will be used to provide additional information about traffic signal supports. Various types of overhead signal supports are also depicted in ***Table 497-4.***

450-6.2 Strain Pole Type Support

Strain poles shall comply with the manufacturer's shop drawings, **SCD TC-81.10** and the plans. They shall be galvanized unless paint is specified in the plans, and the general features should be inspected in accordance with ***Section 250-4.2.***

When strain poles of the embedded type are specified, they shall include an extension for embedment below groundline and a welded-on ground sleeve. The pole extension shall be sufficient to reach within 3 inches (76 millimeters) of the foundation depth as specified in the table in **SCD TC-21.20**, or the extension may be a minimum of 6 feet (1.8 meters) if a reinforcement cage is provided as also shown on the **SCD**. The cage shall overlap at least 24 inches (610 millimeters) of the pole extension and reach to within 3 to 4 inches (76 to 102 milimeters) of the foundation's specified depth. A special foundation design is required when soil with a load bearing capacity of less than 2,000 pounds per square foot (9700 kilograms per square meter) is encountered. Embedded poles normally do not include a handhole or blind half couplings for internal wiring.

When shown on the manufacturer's shop drawings, and as permitted by **CMS 732.11**, strain poles may be tapered tubes with a cross section which is circular or a regular polygon of six or more sides, or may be a type consisting of straight sections with a tapered effect accomplished by the use of reducers.

Strain poles used to support traffic signals or signs **(SCD TC-17.10)** shall be furnished with one or more span wire clamps with shackles for attachment of messenger wire **(see SCD TC-84.20).** The messenger wire may be attached by wrapping twice around the pole and securing with a three-bolt clamp, as shown in **SCD TC-84.20**, when used on round, tapered steel strain poles.

Erection of these poles shall be in accordance with the general procedure given in ***Section 250-4.6***, except as noted in this section.

For the initial rake of strain poles of the anchor base type, leveling nuts shall be adjusted to provide a rake of one-eighth to one-half inch per foot (11 to 42 millimeters per meter) of pole in the direction opposite to the contemplated span wires and are to be made snug tight. Further adjustment may be necessary to assure that the strain poles are essentially vertical after the application of span wire load.

For the initial rake of strain poles of the embedded type, poles shall be embedded in concrete to provide a rake of one-eighth to one-half inch per foot (11 to 42 millimeters per meter) of pole in the direction opposite to the contemplated span wire and braced. The age of the concrete before it is considered cured, before the bracing may be removed, and before the permitted application of span wire load, shall be in accordance with ***Section 250-3.4.***

450-6.3 Single Arm Support

Single arm supports shall comply with the manufacturer's shop drawings, **SCD TC-81.20** and the plans. General features of the support shall be inspected in accordance with ***Section 250-4.2***, and except as noted in this section, erection of the support shall be in accordance with the general

procedure given in ***Section 250-4.6***.

Welds shall be inspected according to ***Section 250-4.3*** and the galvanizing inspected according to ***Section 250-4.4***.

For arms of two telescoping pieces, a 15 inch (380 millimeters) overlap is required. The overlapped arms shall be secured with a stainless or galvanized steel through-bolt with hex head or nut(s).

Arm caps shall cover at least 50 percent of the end area **(CMS 732.11)**.

An arm clamp with clevis shall be furnished at each signal position, as well as a hole with a rubber grommet for the outlet of signal cable.

The installation of small signs and their attachment to the arms should be checked. Any possible interference between swinging signals and signs should also be checked.

Blind half couplings shall be located on the pole of the support for mounting pedestrian signal heads or controller cabinets when required by the plans.

Signal heads shall be installed so that their bottom surface is 16 to 18 feet (4.9 to 5.5 meters) above the roadway. The signals shall be installed at essentially the same elevation. Drop pipes should be used only when necessary to maintain the clearance between 16 to 18 feet (4.9 to 5.5 meters). If the clearance without a drop pipe will be slightly over 18 feet (5.5 meters), it is permissible to omit the drop pipe, with the maintaining agency's approval.

Initial rake shall be adjusted so that under the load of signals, the pole will assume an essentially vertical position and the arm rise be within the limits specified on **SCD TC-81.20**, i.e., 3 inches (76 millimeters) minimum and 12 inches (300 millimeters) maximum.

450-7 Sag and Vertical Clearance

Figure 498-13 illustrates sag guidelines and vertical clearance standards for traffic signals.

450-8 Signal Span Messenger Wire and Appurtenances

450-8.1 General

This section will be used to provide additional information about signal span messenger wire and appurtenances.

450-8.2 Signal Messenger Wire and Cable

Messenger wire and accessories shall comply with **SCD TC-84.20** and **CMS 732.18**. Messenger wire diameter shall be in accordance with the plans.

The height at which the messenger wire is to be attached to the pole will, in some instances, be shown on the plans. In cases where this is not shown, the contractor is responsible for determining the proper attachment height. This determination shall consider the relative elevation of pavement to pole foundation top, the desired clearance between pavement and the bottom of each signal, i.e., 16 to 18 feet (4.9 to 5.5 meters), the sag in the messenger wire (3 to 5 percent), and the height of each signal.

Alternate methods of attaching messenger wire to strain poles may be used, as follows:

1. Span wire clamp with clevis, anchor shackle and thimbles on the messenger wire, or

2. Messenger wire wrapped twice around the strain pole and secured with a three-bolt clamp of the proper size, when used on round, tapered strain poles.

If the messenger wire attachment to strain poles makes use of the alternative with pole clamps and anchor shackles, the wire is to be hooked through the shackle using a thimble and secured with a three-bolt clamp. A preformed guy grip shall not be used for messenger wire attachment at the pole. Guy grips of the proper size may be used at bull rings (aerial corners).

Thimbles with a correct groove size for the messenger wire (or the wire and eye of guy grips) are to be used at anchor shackles and bull rings. When three-bolt clamps are used, the wire tail is to be served as shown in ***Section 450-8.3***. See ***Section 450-8.4*** for the installation procedure for preformed guy grips.

Thimbles with a correct groove size for the messenger wire or the preformed guy grip shall be used to connect to anchor-type shackles or to bull rings at span wire aerial corners.

Messenger wire sag shall comply with **CMS 632.22** and ***Section 450-7***.

The signal cable shall be attached to the messenger wire by lengths of preformed lashing rod. The lashing rod shall be the proper internal diameter to snugly hold the cable, but not cut into its jacket. See ***Section 450-8.6*** for further information.

A drip loop shall be formed in the signal cable at each weatherhead, and should extend at least 6 inches (150 millimeters) below the weatherhead **(see *Figure 498-14*).**

Cables or groups of cables up to a maximum of four, hanging within pole interiors, shall have their strain relieved by cable support assemblies as described in ***Section 450-8.7***, ***Figure 498-14*** and **SCD TC-84.20**.

450-8.3 Messenger Wire Served Ends

Messenger wire may be attached to various accessories by looping the wire to make an eye.

The wire end shall be secured by a three-bolt clamp, and the cut wire end or tail shall be "served" with construction wire or clamped with a sleeve device as shown on **SCD TC-84.20**. The following illustrations show both serving methods for the wire tail:

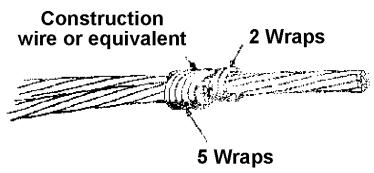

Serving With Wire

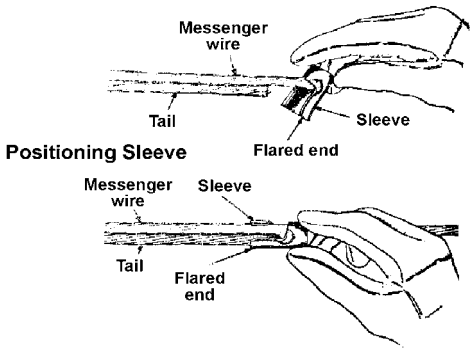

Sleeve in Position

Serving With Strand Sleeve

450-8.4 Preformed Guy Grips

Preformed guy grips are made of helically shaped high-strength steel wire. They are available in sizes fitting the outside diameters of messenger wire and form an eye permitting attachment to various accessories.

As shown in **SCD TC-84.20**, they should be used at bull rings of span wire aerial corners (see the following illustration). Thimbles are used in the eye of grips in accordance with standard details in the **SCD**.

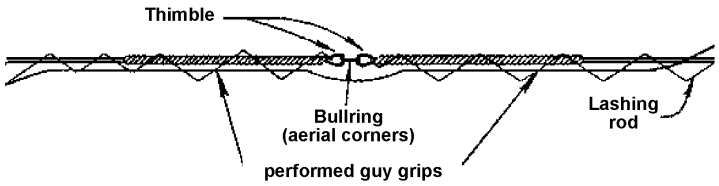

Grips are installed on an end of the messenger wire by wrapping a first leg of the grip to the messenger wire. In most cases, the accessory to which the grip is to be attached must be inserted in the eye of the grip with a thimble before the second leg of the grip is wrapped. The second leg is then applied to the combined first leg and messenger wire. The following illustrations show the wrapping sequence:

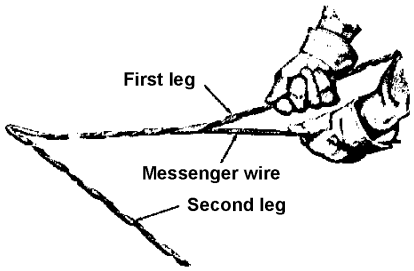

Applying First Leg

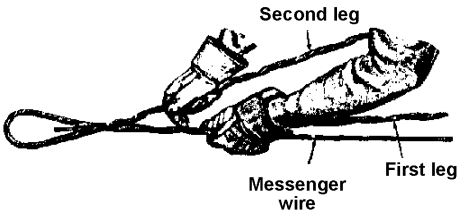

Applying Second Leg

Guy grips shall not be used on messenger wire used for span wire sign supports. In this application, wind load on the signs can cause failure of the grips **(see SCD TC-17.10)**. Guy grips shall not be used for attachment to signal strain poles (**SCD TC-84.20(5)**).

450-8.5 Cable and Wire

In certain instances, the plans will assign a color code usage for each cable, or a typical usage by color code. All connections should be made observing these assignments, and any deviations, if determined necessary, should be recorded. When a color code usage is not provided, good electrical wiring practice would still dictate that color code wiring on the project be consistent. Typically, white is reserved for the neutral or common leg of a circuit. The following provides additional information about various types of cable and wire contained in **CMS Table 732.19-1**:

1. **Signal cable** is used as the electrical connection between signal heads and the controller cabinet at an intersection. The cable may be either **IMSA 19-1**, which has a jacket of polyvinyl

chloride, **IMSA 20-1**, which has a polyethylene jacket, or **IPCEA S-61-402**. The number of conductors and wire gage shall be as specified on the plans. Conductors shall be of copper and stranded, and conductor insulation shall be color coded. Splices are not permitted in signal cable **(CMS 632.23)**, and the cable should be scanned to be sure that there are none. As temperatures decrease, signal cable gets stiffer and harder, becoming brittle when below freezing. In very cold weather, the cable should be handled with care so as not to damage the jacket or insulation when unreeling, flexing and installing. The method of measurement of signal cable is shown in ***Figure 498-16***.

2. **Interconnect cable** is used as the connection between intersections for systems of signals (although there is no significant difference between signal and standard interconnect cable). The cable may be either **IMSA 19-1**, **IMSA 20-1** or **IPCEA S-61-402** as in signal cable, or twisted pair/shielded interconnect cable conforming to **REA PE-39** may be required by the plans.

   Twisted pair/shielded cables are less prone to pick up induced current as a result of nearby electrical devices or magnetic fields, and are necessary for certain types of communication systems which may be used to interconnect signals. The number of conductors and wire gage shall be as specified. It should be noted that in the case of twisted pair/shielded cable, the number of conductors is typically referred to as the number of pairs (pair count), i.e., six-conductor cable would be referred to as a three-pair cable. Conductors shall be of copper and are usually solid.

3. **Interconnect cable of the integral messenger type** is aerial self-supporting cable with a "figure 8" cross section. The cable may be either **IMSA 19-3**, which has a jacket of polyvinyl chloride, or **IMSA 20-3**, which has a polyethylene jacket. Shielded versions, **IMSA 19-4** and **IMSA 20-4**, may be required by the plans. The number of conductors and wire gage shall be as specified. Conductors shall be of copper and stranded, and conductor insulation shall be color coded.

   Twisted pair/shielded interconnect cable of the integral messenger type conforming to **REA PE-38** may also be required by the plans.

4. **Loop detector wire** is laid in turns in saw slots cut into the pavement and routed by the groove to the edge of pavement and to a pull box. The wire is single-conductor No. 14 AWG. The conductor shall be of copper and stranded. Loop detector wire consists of detector wire inserted into a flexible plastic tubing **(CMS 732.19)** meeting specifications **IMSA 51-5**. The tubing shall encase the wire completely from the splice at the lead-in cable through the entire loop turns and back to the splice.

5. **Lead-in cable for detector loops** is spliced to loop wire and routed to detector units in the controller cabinet. The cable shall be two-conductor No. 14AWG with jacket of 0.04 inch (1 millimeter) minimum black polyethylene and insulation of polyethylene. Each conductor shall be stranded copper. The conductor pair shall be twisted and shielded.

6. **Lead-in cable for magnetometers** is spliced to the lead which is a part of magnetometer probes and routed to detector units in the controller cabinet. The cable is four-conductor No. 18 AWG with a jacket of 0.026 inch (0.66 millimeter) minimum high density polyethylene and a low capacitance insulation. Each conductor shall be stranded copper, and insulation shall be color coded. The four conductors shall be twisted.

7. **Power cable** is used as the connection between the service pole or service drop and the controller cabinet. The cable normally is two-conductor and **UL**:RHH/RHW/USE type. The wire gage shall be as specified. Conductors shall be color coded, of aluminum and stranded.

Stranded copper may be substituted with an AWG one gage higher (wire one size smaller). When specified, power cable may be three conductor. Single conductor cables may be substituted for a two (or three) conductor cable, but color coding should still be provided.

8. **Service cable** is used to bring power to the vicinity of an isolated intersection. The cable is normally two-conductor (duplex) and XHHW type or cross-linked polyethylene with a 0.045 inch (1.14 millimeter) minimum jacket. The wire gage shall be as specified. The cable is aerial self-supporting with one conductor being an uninsulated ACSR (aluminum conductor, steel reinforced) messenger wire. An insulated conductor of stranded aluminum is twisted around the messenger. Stranded copper with an AWG one gage higher (wire one size smaller) may be substituted for the aluminum conductor. Three-conductor (triplex) may be specified where two insulated conductors are twisted around the messenger wire. The uninsulated messenger serves as the grounded neutral of the power supply.

9. **Ground wire** is used to connect signal or sign supports to ground rods. The wire shall be single-conductor No. 4 AWG made of seven-strand soft drawn copper with white insulation and rated at 600 volts. The wire is used as part of the **CMS 625.09** Ground Rod item.

450-8.6 Lashing of Overhead Cable

A preformed helical lashing rod shall be of the proper internal diameter to tightly secure overhead cable(s) to the messenger wire. A lashing rod should not be loose or so tight as to be impressed deeply or cut into the cable jacket. If either deficiency is observed, the proper internal diameter may be determined by the following formula: C approx. = (0.85) (D+m), where C is the lashing rod internal diameter, D is the cable jacket diameter and m is the messenger wire gage (all dimensions in inches (millimeters)).

For groups of several cables of varying diameter, the internal diameter of the lashing rod may be best determined by a graphic layout to scale.

Signal cable routed on messenger wire should neatly pass the bull rings in its path. Also, signal cable routed around an aerial corner formed in the span wire at a bull ring should have a radius in its routing small enough to form a tangency with the bull ring.

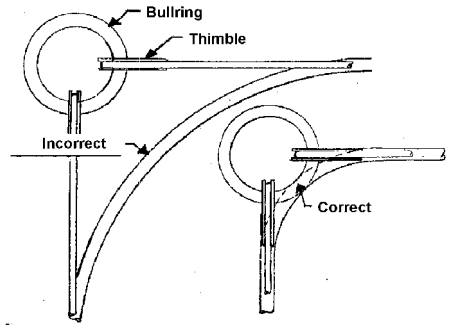

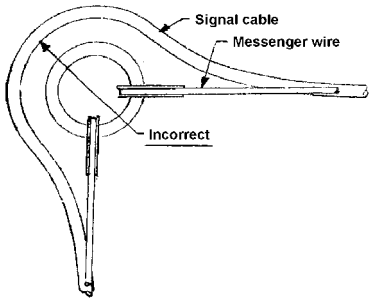

450-8.7 Cable Support Assemblies

As shown in ***Figure 498-14***, a cable support assembly makes use of a flexible tubular wire mesh device called a cable grip which has a gentle holding action over its length and which is used to eliminate strain or damage to the jacket of cable(s) hanging in the interior of poles.

The support assembly consists of the grip attached to a single “U” eye support bale and a sling

when necessary. The grip may be used on an individual cable or a group of cables up to a maximum of four **(CMS 632.21).** The grip shall be the proper size and strength for the cable(s), of stainless steel or tin coated bronze, and may be either a “closed” or “split with rod” type. The split type is used when a cable end is not available. In this application, the grip mesh is not a continuous tubular weave, but is split for wrapping around the cable(s) and is secured by a rod which is inserted through alternate weaves at each side to form a tube.

The support’s bale shall be hung over the pole J-hook if sufficient length is available; otherwise, a sling shall be made of messenger wire, clamps and thimbles. The sling wire is to be passed through the bale eye, adjusted to the proper length and hung on the J-hook.

Pole interiors should be checked by removing pole caps to verify that cable support assemblies are in place, hung on the J-hook and properly adjusted to eliminate cable jacket strain.

450-8.8 Aerial Interconnect Cable

For aerial interconnect cable, the following standards and guidelines apply:

1. Aerial interconnect cable and accessories shall comply with **SCD TC-84.20** (illustrated in part in ***Figure 498-15***). Interconnect cable may be supported on separate messenger wire or be the integral messenger self-supporting type with a "figure 8” cross section, if specified on the plans.

2. Metal poles with messenger wire supported interconnect cable are to be furnished with pole clamps. The pole clamp may provide clevis(es) to which the messenger is attached and terminated, or may provide a stud to which a clamp assembly can be bolted.

3. Messenger wire ends are to be looped and secured with three-bolt clamps or a messenger vise, or a preformed guy grip dead end may be used ***(see Section 450-8.4)***. If clamps or vises are used, the wire tail shall be served ***(see Section 450-8.3)***. Thimbles with a correct groove size for the messenger wire shall be used to connect to the clevis of the pole clamp.

4. When messenger wire is to be grounded to a metal pole, a ground clamp, an insulated ground wire and a bolt tapped into the pole shall be used (also see ***item 10*** in this section).

5. Wood poles with interconnect cable shall be fitted with through-bolts holding a clamp assembly or with a thimble eye-bolt to which the messenger may be attached and terminated.

6. The clamp assembly shall be suitable to the type of cable support, either messenger wire or self-supported cable with "figure 8" cross section. Clamp assemblies for "figure 8" interconnect cable differ slightly from those intended for use with separate messenger, inasmuch as the clamp used with "figure 8" must allow a small gap for the web of the "figure 8" cable which joins the messenger to the cable.

7. When messenger wire or "figure 8" cable is to be grounded on a wood pole, a ground clamp and an insulated ground wire stapled to the pole and covered by a molding shall be used (also see Item 10 in this section). The ground clamp used with "figure 8" cable shall be a type with teeth to penetrate the jacket over the messenger. The ground wire shall be bonded to an existing ground wire or to a ground rod.

8. Standard interconnect cable shall conform to **CMS Table 732.19-1** and have the number of conductors and wire gage specified. There is no difference between standard interconnect cable and signal cable, only in the application. Interconnect cable of the shielded type may be specified in the plans. The interconnect cable should be marked with the correct

nomenclature. Solid conductors are not permitted **(CMS 732.19)** unless specified in the plans. Splices may be used on long lengths of interconnect cable **(CMS 632.23)** and shall be accomplished only in weathertight splice enclosures. Splice enclosures may be either aerially located on the messenger wire or be a pole-mounted box type **(see SCD TC-84.20)**. Where the aerial enclosure is clamped to the span, it should be within 2 feet (0.6 meter) of a pole to improve accessibility. No measurement allowance is given for splices.

9. Aerial interconnect cable is to have a sag between three to five percent of pole spans or is to match existing utility lines.

10. Messenger wire supporting interconnect cable, and the integral messenger of self-supporting type cable, is to be grounded in cable runs at the first and last poles and on intermediate poles at intervals not to exceed 1200 feet (366 meters) (also see ***item 4*** of this section for grounding on metal poles, and ***item 7*** for grounding on wood poles).

11. As temperatures decrease, interconnect cable gets stiffer and harder, becoming brittle when below freezing. In very cold weather, the cable should be handled with care so as not to damage the jacket or insulation when unreeling, flexing and installing.

12. Standard interconnect cable may be attached to supporting messenger wire by lengths of preformed lashing rod or by spinning wire. Lashing rods shall be of the proper internal diameter to snugly hold the cable but not cut into its jacket ***(see Section 450-8.6)***.

13. Aerial interconnect cable of the integral messenger self-supporting type (with a "figure 8" cross section) shall have its wind stability increased by being twisted or spiraled once every15 feet (4.6 meters) of span. This is done by clamping the tensioned cable to every other pole and then going to intermediate poles and twisting the cable before tightening their attachment clamps.

14. When the interconnect cable is attached to a pole and continues in a relatively straight line past the pole, this is an intermediate support; whereas, if the interconnect cable turns at the pole, it is a corner or turning point. Certain types of clamps may be well suited for intermediate support applications, while other designs are required for corner clamps. The clamps shown on the left side in **SCD TC-84.20** are usually not suitable for corner clamps if the change of direction is more than about 10 degrees. See **SCD TC-84.21** when the change of direction is more than about 10 degrees.

450-9 Method of Measurement for Cable and Wire

Figures 498-16 through 498-20 illustrate the method of measurement for signal cable, interconnect cable, detector lead-in cable, power cable and service cable, respectively. **CMS 632.29** also specifies the method of measurement for cable and wire.

450-10 Signal Equipment and Wiring

450-10.1 General

This section will be used to provide additional information about other signal equipment and wiring.

450-10.2 Controller Cabinet

While the layout of controller cabinets may vary, the following requirements and guidelines apply:

1. The prewired cabinet should be checked against approved catalog cuts, the wiring diagram

for the cabinet and the plans.

2. The cabinet should be fitted with a small door-in-door (police door) unless otherwise specified. The cabinet should be in good condition, revealing no evidence of damage, with its material free of cracks and pinholes. The doors and seals should fit properly. The cabinet exterior should appear as metallic aluminum unless a color is specified. The cabinet interior may be similar to the exterior or may be flat white. The method of cabinet mounting should be as shown on the plans and the cabinet should be securely mounted.

3. Cabinets equipped with solid state controllers shall be provided with a suitable number of sturdy adjustable metal shelves to mount the specified equipment and to provide the required space for designated future equipment **(CMS 733.03)**.

4. The equipment shall be arranged for easy withdrawal and replacement, without the necessity of disturbing adjacent equipment. The permanent location of equipment within the cabinet, as well as the shelves themselves, should allow free circulation of air and not restrict air flow from fan ducts or vents. Components on shelves and devices on the door shall be arranged so that a 1 inch (25 millimeters) minimum space separates them when the door is closed. This minimum space shall not be compromised by plugs, wires, controls or similar items. Terminals and panel-mounted devices with exposed contact points located next to shelf-mounted equipment shall be provided with spacers, shelf lips or other means to assure that component units cannot be accidentally moved into contact with any exposed electrical terminal points. A minimum 4 inches (100 millimeters) clear area from the bottom of the cabinet should be reserved for the routing of cables. No shelf, component or panel-mounted item shall be located in the bottom 6 inches (150 millimeters) of cabinets, with the exception that terminal blocks only in pedestal or pole mounted cabinets may be installed as close as 4 inches (100 millimeters) to the bottom.

5. Ready accessibility should be provided for items such as load switches, flasher, relays, terminal blocks and fuses which are mounted on or plugged into panels on the cabinet back or sides. Switches, controls and indicator lights should be easily operable and visible without having to move equipment from their positions.

6. Major equipment items should bear a name plate, brand or indelible marking for identification as to type, model, catalog number and manufacturer's name or trademark.

7. The furnished controller unit should be checked for the correct type, number of phases, and available control functions required by the plans. Controller units should be furnished with all auxiliary equipment necessary to obtain the operation shown in the plans.

8. When specified, other equipment may be a part of the prewired cabinet, such as: a coordinator, an on-street master, interconnection equipment, preemption equipment, time clock or weekly programmer, and special relays.

9. Furnished detector units should be checked to see if the correct quantity is installed, and the proper type used with each loop and each detector phase. When multi-channel detector units are furnished, the plans may require the provision of special cabinet wiring and an adapter harness to allow single channel detector units to be readily substituted.

10. The prewired cabinet should also be checked for the following auxiliary equipment:

    a. A forced air ventilating fan automatically controlled by a thermostat shall be furnished.

    b. A conflict monitor shall be furnished. When the plans so specify, according to **CMS**

733.03(A.2.c.), an increased capability monitor shall be furnished. The minimum number of monitor channels, related to the number of phases for the intersection, should conform to **CMS 733.03**.

c. Load switches should be provided in sufficient quantity for the interval sequence shown in the plans. The switches shall be solid state **NEMA** triple signal type with input indicator lamps. The minimum number of load switch sockets furnished, related to the number of phases for the intersection, shall conform to **CMS 733.03**.

d. A flasher (or flashers) shall be solid state **NEMA** type.

e. Relays required for the proper operation of the specified equipment shall be furnished.

f. Lightning protection devices shall be furnished for the protection of solid state controllers. They should be located on the incoming power line and on loop detector leads where these connect to the terminal block. When solid state coordinators are furnished, they should be protected by devices across each conductor and ground on the interconnect cable **(see CMS 733.03(A.2.f.))**.

g. A convenience outlet and lamp shall be furnished. The outlet should contain at least one standard three-wire plug receptacle of the ground-fault circuit-interrupting type. The lamp should be an incandescent type, located in the upper part of the cabinet, and controlled by a switch.

h. A main power breaker shall be furnished. The fan, convenience outlet and lamp should be wired on a branch of the AC+ power line preceding the main breaker, so that these may be operated independently of the main breaker control. This preceding branch should itself contain an auxiliary breaker rated at 15 amp.

i. A radio interference filter should be installed in the incoming AC+ power line between the main breaker and solid state equipment. If the equipment furnished does not provide signal and flasher circuit switching at the zero voltage point of the power line sinusoid wave form, filters should also be provided for the load switches and flasher.

j. A manual control cord with push button should be furnished only when the plans so require **(CMS 733.03)**. The cord should be at least 5 feet (1.5 meters) long.

k. Switches required for the proper operation of specified equipment should be furnished and labeled as to function and setting position. The following switches should be grouped behind the small door-in-door (police door): signal shutdown switch, flash control switch and an automatic/manual transfer switch (when manual control is specified).

l. Terminal blocks should not be obstructed by other equipment. Terminal points should accept spade type wiring terminals except for incoming power terminal points which may be either the type to accept bare wire or spade terminals. Contact between adjacent terminal points may be either by bus bar or by wire jumpers with spade terminals.

11. The incoming power bus should be fed from the line side of the incoming 120 VAC power line after the circuit has passed through the main power breaker. A signal bus relay should control power to the bus supplying power for the signal load switches. The requirement for radio interference filters **(CMS 733.03)** should be adhered to, with the buses supplying load switches and flashers being filtered if load switches do not switch at the zero voltage point of the power line sinusoid wave form. A common terminal bus insulated from the cabinet should be furnished for the connection of the neutral wire of the incoming 120 VAC power line. This

common bus should have sufficient terminal points to accommodate all potential cabinet wiring as well as field wiring. A separate common terminal, insulated from the panel, should be used for the interconnect common (if interconnection is a part of the system).

12. The cabinet should include a ground bus bar with an adequate number (at least three) of ground terminal points **(CMS 733.03)**. This bus bar should be grounded to the cabinet. The ground bus bar will normally be bonded to the common terminal bus using at least a No. 8 AWG copper wire.

13. Wiring bundles should be neatly arranged and grouped as to voltage and function, and they should be lashed or restrained so that they do not interfere with the access to equipment, including terminal blocks or buses. The harnesses should be of sufficient length and should be easily traced through the cabinet. All conductors should be stranded, with labeled spade type terminals or plug connectors. The wiring should be color coded, with solid white for the AC common, black for the AC line side power (AC+), and solid green or white with green stripes for the safety ground.

14. Incoming cable and wire should be identified by tags or bands **(CMS 632.05)**. The size, material and method of tag or band identification should be in accordance with **CMS 713.18(B)**, except that marking may be by indelible pen on plastic tags instead of embossed letters. The identification on the tags or bands should conform to the wiring diagram for the cabinet and its intersection, with typical abbreviations in accordance with the Table in **CMS 632.05** (reproduced in ***Table 497-2***).

15. Two copies of the schematic and wiring diagram for each cabinet and its intersection should be furnished by the contractor. The diagrams are to be updated to reflect any changes made during construction. The diagrams should be neat and legible, on durable paper, and folded in a moisture-proof envelope fastened to the cabinet interior.

450-10.3 Cable and Wire Identification

As noted in **CMS 632.05**, cables and wires shall be identified as shown in ***Table 497-2***.

450-10.4 Vehicular Signal Heads and Wiring

Illustrations of the signal head visors, hangers and wiring discussed herein are presented in ***Figure 498-21***.

1. Signal heads shall conform to the plans, **CMS 732.01** and **SCD TC-85.20**. Signal heads shall have the correct number of faces (one-way, two-way, three-way or four-way) and each face shall be made up of the correct number of optical sections (one, three, four or five). Sections shall be of the correct lens size, i.e., 8 or 12 inches (200 or 300 millimeters), color and ball or arrow configuration. Arrow lenses are only to be the 12 inch (300 millimeter) size. It should be noted that arrow lenses are made in Rights, Lefts and Throughs (up). The use of the proper arrow lens should be checked.

2. Lenses shall be aligned properly in their frames so their optical configuration directs most of the light to the forward sector.

3. As noted in ***Section 420-4.2***, signal heads shall have a yellow finish, unless otherwise specified in the plan.

4. Cutaway type visors **(CMS 732.01)** shall be fastened to each optical section, unless open bottom tunnel visors or other types are specified, and the interior finish of the visors shall be

flat black.

5. Signals should be clean and the assembly tight. Gaskets should be in good condition and lens door hinges and latches should be in good working order. All openings not used for mounting purposes shall be closed by waterproof caps.

6. Five-section faces, arranged in accordance with **SCD TC-85.20** and the plans, are to use galvanized pipe, elbows and tubular hardware, painted to match the signal head.

7. Swinging signals shall be installed in a plumb condition. A balance adjustor should be used only when necessary to achieve plumb **(CMS 632.06)**.

8. Swinging signals suspended from a mast arm shall be fitted with a universal hanger permitting swinging in both longitudinal and transverse directions **(CMS 632.06)**.

9. When specified by the plans, disconnect hangers shall be used with signal heads.

10. Drop pipes, 1 1/2 inch (38 millimeters) diameter galvanized pipe, are a source of trouble and are aesthetically unattractive; therefore, they are intended to be used only when they are necessary to permit signals to be suspended above the roadway within a clearance of 16 to 18 feet (4.9 to 5.5 meters). Signals supported by span wire, with sag required between 3 and 5 percent **(SCD TC-84.20)**, shall be brought to proper clearance by adjusting the attachment height of the span wire to the poles. Because of the 2 foot (0.6 meter) clearance tolerance, drop pipes should not be necessary in most cases.

11. When the plans so specify, backplates shall be fitted to signal heads.

12. Signal cable shall be routed into the interior of heads through the entrance fitting using a grommet. The cable shall be routed to each face's terminal block, which is typically in the yellow indication section but may be in the green section. Conductors shall be fitted with spade type terminals and shall be fastened securely to the correct terminal points. Conductors shall be identified according to the wiring diagram. Signal cable shall not be spliced, either between signals or in signal face interiors.

13. External signal cable shall to be fashioned into a drip loop extending at least 6 inches (150 millimeters) below the entrance fitting but shall not chafe on the signal.

14. Lamps for 8-inch (200 millimeters) yellow lenses shall be 550 lumens (minimum initial) or 70 watts (maximum input), lamps for 8-inch (200 millimeters) green or red lenses shall be 1260 lumens (minimum initial) or 116 watts (maximum output), and lamps for 12-inch (300 millimeters) lenses shall be 1650 lumens (minimum initial) or 150 watts (maximum input), unless otherwise specified **(CMS 732.04(B))**. The light center length for lamps suitable for 8-inch (200 millimeters) lenses is 2 7/16 inches (62 millimeters), and for lamps suitable for 12-inch (300 millimeters) lenses, this length is 3 inches (76 millimeters). The light center length is measured from the tip of the base to the approximate center of the filament. Lamps shall have a clear glass envelope and a rated life of 8000 hours. Lamp sockets shall be rotated so as to position the open portion of each lamp filament in an upward position. All vehicular signal lamps shall be prequalified in accordance with **CMS 732.04(B)**.

15. Each face of a signal head shall be oriented to its approach of traffic and its locking device securely tightened. Orientation or aiming of standard signals should be done so that the maximum light intensity from a standard signal is directed slightly below the horizontal center; thus, on a level approach, the face of the signal should be essentially vertical. When an approach to a signal is on a grade, the signal may be tilted slightly to point the signal axis

parallel to the grade of the approach. Horizontal aiming should orient the axis of signal display parallel to the centerline of the approach for straight approaches when the signal is over the roadway. When the approach roadway is curved, or when a signal is not over the roadway, the axis should be directed at a point on the approach which is 175 to 625 feet (54 to 191 meters) in advance of the intersection, the distance being dependent on the speed of approaching traffic. For convenience, **OMUTCD Table 4D-1** has been reproduced in part as ***Table 497-3***.

16. When a vehicular traffic signal head has been erected and faces approaching traffic, it shall either be in operation as a stop-and-go signal or a flasher, or it shall be covered or bagged. This is an **OMUTCD** requirement **(OMUTCD Section 4D.01)** and cannot be ignored. Typically, the plans will contain an item for "Covering of Vehicular Signal Heads" which will require the contractor to cover, maintain the covering, and subsequently remove the covering when the signal is ready to commence operation.

17. Normally, the plans will provide the "covering" item for each new signal head, but will not provide them for any existing heads which are to be removed. The intent is that "covering" will be necessary for the new heads until they and their associated controller and wiring have been checked by circuit testing **(see *Section 450-10*)**, while any existing signals at the intersection will continue to control traffic. When the new signals are uncovered and placed in operation, the existing signals can be quickly removed. Specific maintenance of traffic requirements in any plan may require a different means to assure the unused signals are not exposed to traffic.

450-10.5 Optically Programmed Signal Heads

Programmed heads ***(see Section 420-4.6)*** shall conform to approved catalog cuts, **CMS 732.02 and 732.03**, and the plans. They are to have the correct number of optical sections making up each face. Programmed heads have many points of similarity to regular heads. Items 2, 3, 5, 11, 12, 13, 16 and 17 of ***Section 450-10.4*** also apply to these signal heads. For more detailed information, see publications by the manufacturer.

Each optical section shall be fitted with a visor **(CMS 732.02 and 732.03)** and the interior surface of visors shall have a flat black finish.

Programmed heads shall be mounted in a manner permitting little or no motion. If mounted on a mast arm, a rigid adapter shall be used. Heads of more than three vertical sections mounted on a mast arm shall be fitted with pipe backbracing, as shown on **SCD TC-85.20**. The pipe shall be a minimum of 17 inches (430 millimeters) behind the signal center axis so that adequate clearance is provided for the programming procedure. If heads are supported by span wire, a tether messenger wire shall be attached to a fitting in the bottom of the signal's lower section.

Customarily the manufacturer's representative will program the signals, but in accordance with the plans, the contractor is responsible for the correct aiming and masking of the signal so as to be visible to drivers or pedestrians only in the area indicated on the plans.

Signals are pre-tilted to cover most situations. The yellow indication section should be aimed first and the other sections aimed similarly. The housing shall be opened and the lamp collar and diffuser removed. The roadway inverted image should be observed on the surface of the glass with the eye held a distance of 2 feet (0.6 meter) behind. The image observed is where the optics are pointed. The tilt of the integral adapter shall be adjusted so the horizon appears at the lower third of the glass. The adapter screws are then to be tightened. All sections shall be at the same tilt angle.

The signal shall be rotated horizontally so the image on the glass covers the proper roadway lane(s). The bolts of the mounting adapter shall be loosened and the signal rotated around its serrated surface. The movement of traffic should be examined on the glass. When the roadway image appears correct, that is, pointed in the direction where it should be seen, all screws may be tightened. All sections of the signal should now be adjusted and rigid in their mountings, properly aimed and ready for masking.

The yellow indication section of the signal should be masked first since it transmits a brighter image. The other colors can then be masked identically.

Masking requires the use of opaque tape furnished by the manufacturer. The tape shall be applied to the glass, up to the edge, and squeegeed flat to remove air bubbles. The tape initially should be applied horizontally to the glass to cover the image of the sky and that portion of the roadway which is distant. After this is done, tape should be applied to the images on the sides of the lane(s) where the signal is not to be visible. In many cases, signal visibility is desired for a left turn lane only, and visibility to the adjacent through lane should be masked. Excess tape extending beyond the edge of the glass should be trimmed away, taking care not to cut on the surface of the glass.

The reduced area on the glass should be checked to verify that its image is the only area in the roadway which should see the signal. The lamp collar and diffuser may now be replaced and the housing latched.

The boundaries of the area in the roadway where the signal is to be visible should be explored on foot to verify that the head is properly programmed.

450-10.6 Pedestrian Signal Heads

Pedestrian signal heads shall conform to **CMS 732.05**, approved catalog cuts, the plans and **SCD TC-85.10**. Signals shall have the correct type of light source and lettering height in accordance with the plans **(CMS 632.08)**.

Housings shall have a black finish, unless otherwise specified (**CMS 732.05**). Visors shall be fitted over each message, except one type may have the entire face protected by a flat black sunshade fastened close to the lens. The interior surface of visors shall be flat black finish.

Signals should be clean and the assembly tight. Gaskets should be in good condition and lens door hinges and latches in good working order.

Housings shall be positioned with a minimum set back of 2 feet (0.6 meter) from the curb and a height of 8 to 9 feet (2.4 to 2.7 meters) above the sidewalk for adequate clearance. The heads shall be oriented toward their crosswalk and locked securely in position.

Lamps for incandescent signal heads of the 8-inch (200 millimeters) lens type shall be 1300 lumens (minimum initial), and for the 12-inch (300 millimeters) lens type shall be 1650 lumens (minimum initial), unless otherwise specified.

Pedestrian push buttons shall conform to ***Section 404-2***, approved catalog cuts, and **CMS 732.06**. Push button housings shall have a yellow finish, unless otherwise specified. The push button shall be positioned 3.5 to 4 feet (1.1 to 1.2 meters) above the sidewalk.

Push buttons on metal poles shall be installed over a 3/4 inch (19 millimeters) maximum field drilled hole with edge protected by two coats of zinc-rich paint and a rubber grommet inserted. The push button housing curved back shall be positioned over the hole, wiring routed through to the electrical mechanism and the housing secured by stainless steel screws. Unused holes in the

housing shall be plugged. Push buttons on wooden poles shall have their wiring in conduit connected to a fitting of the signal support.

Signal head supports (conduit and fittings) on wooden poles shall be grounded, using a ground clamp and an insulated ground wire stapled to the pole and covered by a molding.

OMUTCD Section 2B.40 addresses standards for the signs used where push buttons are provided to actuate pedestrian signals. The sign legend shall conform to the plans.

450-10.7 Loop Detector Slot and Wire

Figures 498-23 and 498-24 illustrate details related to the following discussion of loop detector slots and wiring.

1. Slots cut into the pavement forming rectangular detection loops shall be in accordance with the plans and **SCD TC-82.10**.

2. The slots shall be a minimum of 3/8 inch (9.5 millimeters) in width and shall have a minimum depth of 2 inches (50 millimeters) in concrete and 4 inches (100 millimeters) in asphaltic concrete. **SCD TC-82.10** requires that loop corners be made at a drilled or bored hole, about 1 1/4 inches (32 millimeters) in diameter, and with the same depth as the saw slot. Any sharp edges at the saw slots and the holes shall be chiseled out.

3. The slot depth shall accommodate the specified number of turns of wire laid so that the uppermost wire has a covering of at least 3/4 inch (19 millimeters). The number of wire turns shall comply with the plans and the table in **SCD TC-82.10** (also shown in ***Figure 498-23***). A separate slot leading from the loop to the pavement edge is typically cut for each loop.

4. When permitted by the project engineer, loops installed in new asphaltic concrete may be sawed and the loop wire(s) embedded with sealant in a subsurface course with subsequent covering by the surface course.

5. Some plans may specify the use of preformed loops placed on the pavement for covering by a surface course of asphaltic concrete.

6. If the problem of loop installations in brick streets is encountered, the project engineer should consult with the local traffic engineer for recommendations.

7. Loop locations may be adjusted to avoid manholes. Loops should not be placed across pavement joints. Instead, lateral and longitudinal adjustments should be considered, with the approval of the project engineer. If joint crossing is unavoidable or major pavement cracks are encountered, the following techniques may be used ***(see Figure 498-24)***.

    a. In **Technique A**, the loop wires are laid over the joint or crack within a 3 inch (75 millimeters) square or circular hole cut to slot depth. The wires are laid in an “S” shape and the hole filled with elastic joint material or asphaltic concrete.

    b. In **Technique B**, the slot at the joint or crack is saw cut to twice normal width and depth. The wires are laid so as to conform to the deepened slot which is injected with soft-setting butyl rubber up to the depth of the original slot. The original slot depth and the remaining perimeter of the slots are embedded with standard sealant cured to a flexible state.

    c. In **Technique C**, the slot at the joint or crack is enlarged. The wires are encased in a length of plastic tubing which should be large enough to loosely hold all wires and may be

slit lengthwise to facilitate construction. Before placing it in the slot, the ends and the longitudinal slit are to be taped shut to prevent the entry of loop sealant. The enlarged slot is then filled with loop sealant.

8. Before loop wire is placed, all slots shall be brushed, blown clean of loose material and completely dry.

9. Loop detector wire shall be single-conductor No. 14 AWG insulated wire, type **IMSA 51-5** with stranded copper conductors, unless otherwise specified. The wire should be marked at intervals with the wire gage, **UL** label and type. The detector wire is contained inside a flexible plastic tube, as required by **IMSA 51-5**.

10. The correct turns of loop wire ***(Figure 498-23)***, up to a maximum of four, shall be placed in the slots, to comply with **CMS 632.23** and the plans. The wire shall be pushed to the bottom of the slots with a blunt wooden tool (or equivalent) to avoid damaging the insulation.

11. The wires with tubing at the pavement edge or curb shall be led into a conduit of the size shown in **SCD TC 82.10**. Care should be taken to prevent excessive slack at the point where the wires enter the conduit. The high end of the conduit shall be sealed in accordance with **SCD TC 82.10**.

12. The detector wire shall be twisted in the conduit leading from the pavement edge to the pull box. The flexible plastic tubing shall cover the wire completely from the splice at the lead-in cable, through the entire loop turns and back to the splice. The tubing provides extra protection from abrasion and allows the wire to slide inside the tubing in case of pavement shift or cracks, thus minimizing the possibility of breakage. Since wire/tubing includes an air pocket, it will tend to float to the surface when sealant is applied to the slot. For this reason it is usually necessary to wedge short lengths of the tubing, or similar devices, into the slot to wedge down the tubing/wire. These are usually needed at 1 to 2 foot (0.3 to 0.6 meter) intervals.

13. The slots shall be completely filled with approved sealant and left undisturbed until cured to a flexible state. Sealants on the **ODOT** prequalified list shall be used, in accordance with the manufacturer's recommendations. Materials which set up to a hard or brittle state are not acceptable.

14. Detector loops are measured as "each" loop installed and the item includes wire, pavement cutting and sealant.

450-10.8 Loop Detector Lead-In Cable

Unless otherwise specified, loop detector lead-in cable **(CMS Table 732.19-1)** shall be two-conductor No. 14 AWG twisted pair shielded, with a jacket of black polyethylene 0.04 inch (1 millimeters) thick minimum, and polyethylene insulation with conductors of stranded copper.

Within the pull box, loop wire ends shall be joined to the conductors of the lead-in cable by soldering and covered with insulating material ***(see Figure 498-25)***. An approved, poured epoxy waterproof splice kit shall be used. It is understood that epoxy splice kits are easily damaged by freezing temperatures encountered prior to mixing. Damaged epoxy components may sometimes be recognized if either of the components has turned or is streaked milky white.

Lead-in cable shall be routed to the controller cabinet, fitted with soldered spade type terminals and fastened to the correct points of the terminal block. The lead-in cable's shielding shall be grounded to the ground bus within the cabinet.

If a pull box is not specified on the plans, the splice between the loop wire and lead-in cable shall be made in the first entered pole or pedestal, except where the controller cabinet is mounted on the pole or pedestal. If the controller cabinet is mounted on the pole or pedestal, the loop wires may be routed directly into the cabinet and no lead-in cable is necessary.

Loop detector lead-in cable is measured in accordance with ***Section 450-9*** and ***Figure 498-18***. The poured epoxy splice in the pull box is included.

450-10.9 Magnetometer Probes and Lead-In

Magnetometer sensor probes ***(Figure 498-26)*** may be set in the pavement, or under and in bridge decks in accordance with **SCD TC-82.10** at the locations shown on the plans.

Although core drilling may be performed after concrete placement, it is preferred that probe holes in new concrete be formed by pouring concrete around a vertical piece of capped vinyl-chloride or other non-metallic tubing. Probe holes in existing concrete must be core drilled.

Probe installations under bridge decks may be as shown in ***Figure 498-26***. The lead from probes should be in non-metallic conduit. Probes in bridge slabs should be centered in the reinforcing steel grid square which is nearest to the probe's plan location. The center of a grid square may be located by the use of a Pachometer metal locator. The procedure for use of such an instrument is given in ***Section 450-10.10.***

Probe holes in pavement and bridge decks shall be approximately 3/4 inch (19 millimeters) greater than the probe diameter. The probe shall be set so as to have a covering of at least 1 1/2 inches (38 millimeters). However, deeper placement may be used if recommended in the manufacturer's instructions.

The probe lead, which is a part of the probe(s), is to be led from the probe(s) to the edge of pavement, to the bridge parapet wall or under the bridge deck, depending on the design used. When in pavement and bridge decks, the slot for the lead shall be a minimum of 3/8 inch (9.5 millimeters) in width and have a depth of 2 inches (50 millimeters) in concrete and 4 inches (100 millimeters) in asphaltic concrete.

Probe holes and slots are to be brushed, blown clean of loose material and completely dry. The probes are to be set and leads pushed to the bottom of slots with a blunt wooden tool (or equivalent) to avoid damaging the insulation. Probe holes and slots are to be completely filled with approved sealant and left undisturbed until cured to a flexible state. The sealant should be the same as for loop detector slots, as given in ***Section 450-10.7.***

Probe leads in slots at the pavement edge or curb shall be led into a 3/4 inch (19 millimeters) conduit connecting to a roadside pull box. Care should be taken to prevent excessive slack at the point where the lead enters the conduit. The high end of the conduit is to be sealed in accordance with **SCD TC-82.10**.

Unless otherwise specified, lead-in cable **(CMS Table 732.19-1)** shall be four-conductor No. 18 AWG color coded, twisted, with a jacket of 0.026 inch (0.66 millimeters) minimum high density polyethylene and a low capacitance insulation with conductors of stranded copper.

Within the pull box, the probe lead ends shall be joined to the conductors of the lead-in cable by soldering and covered with insulating material. An approved poured epoxy waterproof splice kit shall be used. The kit should be the same as for loop detector lead-in cable as given in ***Section 450-10.8***.

Lead-in cable shall be routed to the controller cabinet and fitted with soldered spade type terminals and fastened to the correct points of the terminal block. The shielding of lead-in cable shall be grounded to the ground bus within the cabinet.

The installation of magnetometer probes includes: the probe(s) and lead, the provision of probe holes and pavement slots when used, sealant for the probe holes and slots, and plastic conduit where required. Probes are measured as individual units with the attached lead. Several probes may be on a single lead.

Magnetometer lead-in cable is measured in accordance with ***Section 450-9*** and ***Figure 498-19***. The poured epoxy splice in the pull box is included.

450-10.10 Use of Pachometer Instrument

A Pachometer is an instrument used to detect the location of metal such as reinforcement bars under a concrete cover. The instrument is a magnetic detector which operates on the principle of the change in magnetic flux due to the presence of ferrous metal.

A probe is connected to the instrument and is passed over the concrete surface being examined. The instrument will indicate when the pole of the probe is parallel to and directly over the axis of a reinforcing bar. Use of the instrument will, therefore, outline the sides of a grid square for accurate magnetometer probe location in the center.

450-11 Signal Performance Tests and System Checks

450-11.1 General

Traffic control signal components and the entire system shall be tested as required by various specifications to assure proper operation before acceptance. Ground rods shall be tested for satisfactory low resistance to ground. A circuit test should be performed on all conductors to make sure there are no shorts, crosses and high resistance or other improper connections. A cable insulation or megger test shall be performed on all conductors to verify the integrity of the insulation covering. All traffic control equipment in the controller cabinet should be checked for correct settings and all controls manipulated for assurance of an operable system.

Finally, the traffic control system shall successfully pass a ten-day performance test, which will give an opportunity for any hidden flaws to reveal their presence. As a final “housekeeping” check, equipment should be observed for any evidence of unattached ground wire, unlatched or unbolted doors, etc.

The results of the various tests are to be entered by the contractor on test report forms ***(Form 496-6)*** as required by **CMS 632.28**.

450-11.2 Ground Rod Test

All ground rods shall be tested by the contractor for earth resistance to ground, as required by **CMS 632.28(B)**. Testing is to be in accordance with **CMS 625.19**, except that the measurement need not be made immediately after installation. Testing shall be performed before the ground wire is attached.

The quality of a ground rod installation varies greatly depending on the characteristics of the earth surrounding the rod. Clay or mud provides the best ground connection since they are dense and contain sufficient moisture and metallic salts to make them conductive. Sand or gravel bearing earth is less conductive.

One type of test equipment commonly used consists of two probes connected to an instrument consisting of a modified Wheatstone Bridge for balancing resistances. As shown in ***Figure 498-27***, the probes are pushed into the earth to form, with the rod, a triangle of equal 10 foot (3 meters) sides.

The general range of the rod's resistance to ground is investigated by initially setting a potentiometer knob to its highest range control knob, selecting the ohm range (1000, 100, 10 or 1) which permits the balance meter pointer to be approximately centered in its dial by adjustment of the potentiometer knob. For this general range selection process, the pointer is activated by depressing the test button to a reduced sensitivity position.

For actual testing, the test button is fully depressed, thereby giving maximum sensitivity for final adjustment of the balancing potentiometer. The pointer is carefully centered in its dial by means of the potentiometer knob, and the rod resistance to ground read in ohms by the position of the potentiometer knob. For example, with the range knob set at 10 and the meter centered with a potentiometer knob setting between 1.2 and 1.3, the rod resistance to ground is 12 ½ ohms.

If the earth resistance exceeds 10 ohms for signal controllers and tower lighting ground rods, and 25 ohms for all other ground rods, the installation is unsatisfactory and the contractor is required to proceed as follows (specified in **CMS 625.09)**:

1. A second rod shall be driven as shown on **SCD HL-20.11** and the two rods temporarily connected together with ground wire. The earth resistance for the pair of rods shall be measured.

2. If the earth resistance for the pair of rods still exceeds the maximum, a 10 foot (3 meters) rod shall be exothermically welded to the top of the second rod and driven into the earth to form a continuous 20 foot (6 meters) long rod. The earth resistance for the pair of rods,10 to 20 foot (3 to 6 meters) long, shall be measured.

3. If the earth resistance still exceeds the maximum, the procedure of lengthening and driving the second rod shall continue until either an acceptable reading is achieved or the extended rod cannot be driven further.

4. If an acceptable reading cannot be obtained after all the steps above, the contractor shall contact the project engineer for instructions.

450-11.3 Short-Circuit Test

Before the performance of any cable insulation (megger) test or the ten-day performance test, a short-circuit test shall be performed by the contractor using a volt-ohmmeter or other approved instrument **(*Form 496-6* and CMS 632.28(C))**. Short-circuit tests shall be conducted with all electrical loads, power sources, equipment grounds, and earth grounds disconnected ***(see Figure 498–28)***.

Signal cable routed to signal heads may be tested with connection made to the lamp sockets, but without the lamps being installed.

Each conductor shall be measured against every other conductor and ground to assure that no short-circuits, cross-circuits, or other improper connections exist. Continuity should not exist between any conductor and any other conductor including ground.

450-11.4 Circuit Continuity Test

Each circuit branch shall be disconnected and tested by the contractor for continuity by temporarily jumpering each branch at its termination and measuring the temporarily looped circuit for assurance that no open circuits exist (***Form 496-6* and CMS 632.28(D))**. This testing is illustrated in ***Figures 498-29 through 498-32***. Each circuit branch should be according to plan, with no high resistance connections and with the proper identification.

Lead-in cable for loop detector wire shall be tested before and after the cable is spliced to the loop wire.

Circuit continuity of signal cable may be done by applying 120 volts to each outgoing circuit and observing that only the specific lamps are lighted.

450-11.5 Cable Insulation Test (Megger Test)

This testing is illustrated in ***Figures 498-33 and 498-34***.

1. Each conductor of cable or wire terminating at the controller cabinet shall be tested by the contractor for insulation resistance measured to ground (***Form 496-6*** and **CMS 632.28(E)**). A listing of the resistance reading for each conductor is to be included in the test results furnished to the project engineer.

2. Cable and wire insulation can be faulty but the imperfections can be easily overlooked, leading to eventual electrical failure of the wiring. Weakening of insulation properties may be caused by poor storage conditions and stress due to rough handling during installation. Dirt is especially troublesome, since it is an electricity conductor and can penetrate small cracks in the insulation.

3. Insulation testing shall be performed with all conductors disconnected from their points on the terminal block in the cabinet so there is no chance of any voltage being present, and to prevent damage to any connected equipment. One megger instrument terminal shall be attached to a termination of jumpered together ends of conductors or to the end of a single conductor cable or wire undergoing testing. The other megger instrument terminal shall be attached to the cabinet ground bus bar.

4. Insulation resistance shall be measured for the wire of roadway loops after the embedding of the wire with sealant in slots.

5. The meter pointer of the megger instrument (or equivalent indication) should be adjusted to zero and the test switch activated. Test duration should be as recommended by the instrument manufacturer.

6. The insulation resistance measured to ground for each conductor shall not to be less than 10 megohms. Cable or wire not meeting this reading shall be replaced.

7. After completion of the cable insulation test, all cabinet wiring shall be connected in accordance with the wiring diagram. The contractor shall demonstrate to the satisfaction of the project engineer that all circuits are continuous and operating correctly, free from shorts, crosses and unintentional grounds.

450-11.6 Functional Test

Before energizing the traffic signals the following functional checks should be made:

1. The incoming AC voltage should be checked.

2. Operation of the following equipment should be checked: cabinet ventilating fan, fan thermostat, and convenience outlet with lamp (when furnished). The filter(s) used with the fan should be unobstructed.

3. Timing settings on solid state controllers should be varied over their ranges and all functions activated to verify that the controls are operable without fault.

4. Timing settings in accordance with the plans should now be entered on the controller, time clock, etc. and checked for corrections. On some projects, timing settings will be provided by the maintaining agency and are not listed in the plans.

5. An agreement should be reached with the contractor and the maintaining agency on the procedure to be followed in the event of a signal failure prior to acceptance.

6. Before signals are energized to control traffic, the maintaining agency should be notified and given an opportunity to check the installation and timing settings.

After energizing the traffic signals the following functional checks should be made. In the event the signals are controlling traffic at the time, these checks should be made with caution to protect the safety of workers, pedestrians and drivers.

1. The function of all cabinet switches should be checked, including the power on/off switch and manual control (when furnished).

2. The traffic signals (and controller indicator lights) should be observed to verify that the controller is timing consistently the intervals and phases set into the controls. A stopwatch is suggested, especially to check critical short intervals. All controllers functions should be activated to verify that operation is proper.

3. The detector units should be investigated to determine which pavement loop(s) or other type sensor is associated with which unit. The visual indication of units (light, meter, etc.) should be observed to determine that each vehicle (truck, car, motorcycle, etc.) entering sensor areas is properly detected on the associated unit and that no extraneous calls occur when the sensor area is vacant. When a detector unit is set for "presence," a detection call should continue as long as a vehicle is positioned over the associated sensor. Concurrent with detection, the appropriate controller indicator light should also exhibit the detection.

4. The flasher switch should be activated to cause the signal heads to flash. Their indications should be checked to verify if they are correct. The flasher switch is then to be returned to the normal or signal mode and a check made of the resumption of normal stop-and-go-operation.

5. The conflict monitor should not be activated by normal signal operation or by the manipulation of cabinet switches. If at any time the monitor is activated, the contractor is required to determine the cause of the problem and make appropriate changes and adjustments before beginning the ten-day performance test. The contractor should test the conflict monitor by artificially causing a number of different conflicting indications and checking that at each test the monitor causes the signals to begin flashing and places the controller in a "stop timing"

mode. Artificial conflict may be caused by touching a jumper wire between two load switch outputs that would signal a traffic conflict. Other methods of artificially caused conflicts may be used at the discretion of the contractor.

6. Signals which are interconnected should be observed to determine if offset relationships are maintained in accordance with settings during all periods of the day.

7. When preemption equipment is furnished as part of the cabinet installation, the proper functioning of the equipment should be checked. The equipment should be activated and observations made to determine if the required sequence of intervals and phases is called for in a correct and safe manner.

8. On projects having equipment furnished for future use only, the equipment should be checked to verify that it is properly installed and operable in a correct manner.

Some signal control equipment, such as time clocks (or switches) and weekly programmers, are intended to vary the timing patterns at different periods of the day or days of the week. To determine if these required changes are occurring at the proper times, it is necessary that observations be made to check the operation at transition times over a period of several days. The change in timing shall not be extremely drawn out or abrupt. The accuracy of time clocks and weekly programmers should be checked. Programmed changes should occur within five minutes of scheduled times for clocks of the electromechanical type and within one minute for clocks of the solid state type. No significant cumulative clock error should be noted during the ten-day performance test.

After successful completion of the ten-day performance test, and after a partial or final acceptance of a project, the contractor is to turn over to the project engineer all manuals, diagrams, instructions, guarantees and related material, as required by **CMS 632.05**. It is recommended that the project engineer list this material in the project diary as a permanent record of the transfer. The project engineer should transfer the material to the maintaining agency. For **ODOT**-maintained signals the material should be given to the **District Roadway Services Manager**.

After a traffic control system project has been accepted by **ODOT**, the project engineer should immediately notify the maintaining agency that as of a certain exact time and date, the agency is responsible for the operation and maintenance of the system.

450-11.7 Ten-Day Performance Test

Before acceptance of the traffic control system, the contractor shall furnish all personnel and equipment required to successfully operate the system continuously for ten consecutive days without major malfunction or failure **(CMS 632.28(G))**.

At least seven days prior to the beginning of the performance test, the contractor shall notify the project engineer of the starting date. The project engineer will notify the maintaining agency **(CMS 632.28(G))**.

The contractor shall arrange with the utility supplying the power for purchase of the energy required to conduct the test. All costs of personnel, equipment, electrical energy and incidentals required to perform the test are to have been included in the contract unit prices for the respective items tested.

Minor failures such as lamps, a single detector or an individual signal head, etc. shall be immediately replaced or repaired and will not cause restart of the test.

A major malfunction or failure, such as a master or local controller, interconnect equipment, etc. will cause termination of the test, and after replacement or repair of the malfunctioning or failed equipment, the beginning of a new ten-day test.

Items which have been repaired or which are replacements are to be monitored by the contractor for a period of ten days to provide assurance of their reliability.

The complete test results are to be furnished to the project engineer on test reporting forms in accordance with **CMS 625.19**. The contractor is to record in the test results the beginning and end of the test, and the method and date of the correction of each fault.

The project engineer should record the following events in the project diary: the date of the beginning of the ten-day performance test, a day-by-day record of faults as they occur during the test, and the date of the successful completion of the performance test.

450-11.8 Final Signal Installation Check

After all wiring is completed and all testing completed and accepted, a final inspection of the traffic control system should be performed to assure a neat and workmanlike appearance.

1. All spare conductors should be connected to the ground bus bar in the controller cabinet.
2. All ground wires should be properly connected.
3. The spade type ends of conductors should be sound. After all testing is completed, they should be reinstalled on their correct points of terminal blocks and tightened.
4. A visual check should be made for any signs of arcing, melted insulation, etc.
5. All debris from wiring work or packaging materials should be cleaned from the bottom of cabinets.
6. Cabinet vents should be checked to assure that they are unobstructed and all filters should be clean and in place.
7. Duct sealing material complying with **CMS 625.12** shall be used to seal the conduit entering the cabinet from the base.
8. All doors on the optical sections of vehicular and pedestrian signal heads shall be closed and latched.
9. No wires or cable should be visible under the base plates of poles and pedestals.
10. The handhole covers on poles and end-frames shall be securely fastened.
11. Pedestals with transformer type bases shall have the access door securely fastened.
12. The covers on pull boxes shall be securely bolted.

Intentionally blank.

460 MAINTENANCE / OPERATIONS

460-1 General

Because traffic signals by their very nature provide positive guidance to conflicting traffic movements, it is imperative that they be maintained in order for them to function reliably. The mean time before failure of a traffic signal installation can be dramatically reduced through proper maintenance practices. The consequence of poor maintenance practices are a reduction in safety to road users and an unnecessarily large exposure to liability claims. **District Roadway Services** personnel and signal maintenance contractors are required to perform maintenance on traffic signals according to a preset schedule.

460-2 Responsibilities

The **Office of Traffic Engineering (OTE)** shall:

1. Staff and maintain a central repair facility for the purpose of repairing components of electrical traffic control devices.

2. Assist **Districts** in maintaining reasonable stock levels of all major electrical items, and their appurtenances, required for new installations and maintenance through the management of annual term contracts and spot purchase contracts.

3. Assist the **Districts**, through procedure manuals, training programs, inspections, and other methods, in providing quality maintenance.

The **OTE Signal Shop** shall:

1. Repair, check and make serviceable for installation all signal controllers, signal relays, detectors, flashers, conflict monitors and other associated items.

2. Provide the loop detectors and other miscellaneous parts to custom wire as per plan new controller cabinets purchased by the **Districts** or rewire/refurbish existing controller cabinets.

3. Periodically provide the **Districts** with technical information concerning old and new equipment, such as: a list of outdated equipment that will not be repaired by the **Signal Shop**, changes, problems, software updates and etc. for any equipment owned by **ODOT**, and other tips or tricks that may help the **District** personnel.

4. Distribute to the **Districts**, at least once per calendar year, a list of all equipment, parts, and services available from the **Signal Shop**.

Each **District** shall:

1. Maintain a stock of traffic control equipment and other spare parts sufficient for normal preventive maintenance and emergency field repairs.

2. Have a plan to support the extraordinary (i.e., severe storm damage) traffic control equipment needs of the **District**.

3. Evaluate, authorize and maintain records of all changes in the location or operation of electrical traffic control devices.

4. Transport defective controllers, detector relays, detectors, conflict monitors, etc., to the **OTE Signal Shop** (or approved contractor/vendor) for service, maintenance and repair, along with a **Signal Shop Order** and a tag indicating the exact type of malfunction. These units shall at all times be properly cushioned to prevent physical damage during shipping and handling.

5. Generate an "as built" drawing for each electrical traffic control device installation, including each new or upgraded intersection control beacon, school flasher or signal. The drawing shall be in MicroStation 5.0 or later format and shall include the following, if appropriate:

   a. Geometrics of the intersection.

   b. Materials list.

   c. Layout and location of the detectors, poles, pull boxes, cable runs, span wire, signal and pedestrian heads, controller, power service, phase diagram, detector operation, date of installation, revision block, and any other information which shows the intended operation.

   d. Changes which affect the geometrics of the intersection and/or the operation of the signal shall be added to the drawing as revisions.

   These electronic files shall be accessible to the **Central Office** in a read-only mode. Signal drawings which exist in a raster or single element format and cannot be modified shall be digitized or converted by other means when revisions become necessary.

6. Perform appropriate engineering studies, as needed, upon which revisions in signal operations, e.g., phasing may be based. When such revisions are required, an engineering report and necessary supporting data shall be submitted for approval to the appropriate **District** staff person.

460-3 Preventive Maintenance

460-3.1 General

ODOT-maintained traffic signal installations shall be inspected a minimum of one time annually. In addition to the annual traffic signal inspection, the following routine scheduled maintenance shall be performed by either **District Roadway Services** section personnel or a signal maintenance contractor.

460-3.2 Traffic Control Signals and Intersection Control Beacons

Every eighteen months incandescent lamps behind all lenses of Traffic Control Signals and Intersection Control Beacons shall be replaced, and the electrical cable and its connections in and near the signal heads shall be checked.

Every twelve months the conflict monitor shall be tested with an automatic conflict monitor tester.

460-3.3 Other Electrical Traffic Control Devices

For School Flashers, flashing and illuminated signs, and other electrical traffic control devices:

Every twenty-four months incandescent lamps behind all lenses shall be replaced and the electrical cable and its connections in and near the signal head shall be checked; and

Every four years mercury vapor lamps shall be replaced, and all reflectors, lenses, tubes and /or lamps shall be cleaned.

460-3.4 Signal Support Inspection

All signal supports shall be inspected at a maximum five-year interval. New signal supports shall be inspected at the time of construction. Refer to ***Section 407-2*** for additional information on signal support inspections.

460-4 As Required Maintenance

The following maintenance shall be conducted as required:

At signalized intersections, and for School Flashers and Intersection Control Beacons (overhead flashers):

1. Replace premature failure of incandescent lamp. Clean all reflectors, lenses, tubes and/or lamps.

2. Repaint painted steel poles, controller housings and signal heads as necessary to maintain good appearance and protection.

3. If required by local conditions of smoke, smog, etc., clean all reflectors, tubes and/or lamps using a mild detergent.

At flashing signs, illuminated signs, and other electrical traffic control devices:

1. Replace premature failure of incandescent lamp. Clean all reflectors, lenses, tubes and/or lamps.

2. Replace premature failure of mercury vapor lamps. Clean all reflectors, lenses, tubes and/or lamps.

3. Maintain and replace all other items as required.

Maintain all signs and pavement markings directly associated with any of these devices.

460-5 Malfunction Response

Each **District** shall seek the cooperation of the **Ohio State Highway Patrol (OSHP)**, local law enforcement, and **ODOT** work crews in reporting outages and malfunction of electrical traffic control devices. The **District** shall provide directions for reporting malfunctions twenty-four hours a day.

Upon becoming aware of a traffic signal malfunction (i.e., single red or yellow outage, power outage, signal on flash, and other malfunctions or damage as deemed necessary), the **District** shall be reasonably prompt in responding at all times, including outside normal working hours. Other repairs, especially green outages, may be made when practicable.

The **District** shall establish procedures for addressing malfunction responses. At a minimum these shall include:

1. If necessary, notify the **OSHP** or other appropriate law enforcement agencies, and ask for immediate assistance with traffic control until operation can be restored to a safe condition.

2. Assure that the signal is examined by a signal electrician or other qualified individual to verify that

the signal was not damaged by the outage.

3. When a response is made to a reported traffic signal malfunction, the nature and time of malfunctions and corrective action taken shall be recorded.

4. All maintenance of traffic operations shall follow the requirements of the **OMUTCD** and **Part 6 of the TEM**.

460-6 Record Retention

The **District** shall be responsible for retaining records on all traffic signal maintenance, installations, upgrades, transfers, and removals. These records shall be retained for seven years and then reviewed by the **State Archives** for possible transfer. If the **State Archives** determines there is no historical value, they can be destroyed. These records shall include:

1. Date of lamp replacements and a description of all other signal maintenance and repairs preformed.

2. The record response to each reported traffic signal malfunction.

3. Documentation to reflect the history of the signals, shall also be maintained for each location. Copies of the original installation and each revision shall be retained either in paper or electronic form or both.

A current signal timing chart, current "as-built" plan, current programming chart for coordination if necessary, cabinet wiring diagram, and special function device diagrams in each controller housing and in the **District** office. If laptop computers are used instead of paper copies, a plan for updating all the signal electrician's laptops shall be developed by the **District**.

460-7 Training

The **District** shall be responsible for training its personnel. The **Office of Training** and the **Office of Traffic Engineering**, in cooperation with the **Districts**, will make the necessary classes and training available. The schedule for the training classes will depend on the needs for the different level of **IMSA** certifications needed by the **Districts**. The following are required classes and training for personnel responsible for the maintenance of electrical traffic control devices:

1. **International Municipal Signal Association (IMSA)** Training.

   a. Work Zone Safety.

   b. Traffic Signal Technician Level I.

   c. Traffic Signal Technician Level II.

2. **Office of Traffic Engineering** Training.

   a. Traffic Signal Maintenance.

460-8 Organizational Performance Index (OPI)

The **Traffic Signal Maintenance Organizational Performance Index (OPI)** is intended to establish a measurable performance of the **District's** traffic signal maintenance. Through the **OPI** process, **Districts** will be identified that are adhering to **ODOT's** traffic signal maintenance policies, and the

condition of **ODOT** traffic signal installations will be quantified.

The **OPI** will provide a snapshot view of the condition of the signal installation when the inspector arrived at the intersection.

For more information on the **OPI**, refer to the **Traffic Signal Maintenance Inspection Manual**.

460-9 Signal Databases

460-9.1 General

Two enterprise data systems have been created by the **IT Department** for traffic-related items. PC based programs have also been developed for accessing and reporting signal information. Internet and Intranet access have been discussed and details will be worked out as the traffic signal databases evolve.

460-9.2 Traffic Signal Maintenance

This database will contain the information from the **Signal Inspection Form** ***(Form 496-7)*** and the resulting **OPI** points for the measurable maintenance items. This database will allow **ODOT** to track signal maintenance inspections.

460-9.3 Traffic Signal Inventory

This database will contain detailed information about every traffic signal installation that includes: location, timing, phasing, equipment information, digital pictures, and a repair history of individual pieces of equipment. The inventory will be completely compatible with the GIS system. The inventory will also be used with the **Division of Planning's** congestion model as one of **ODOT's** initiatives.

460-10 Signal Inspection Items

A sample **Signal Inspection Form** is presented in ***Form 496-7***. The PC based interface software will print out this form as either a blank form or with the header information filled in, if the signal installation has already been entered into the signal inventory database.

When a traffic signal installation is originally entered into the signal inventory database, an unique number will be generated by the computer system called the "ODOT signal system number." This number will then become the primary tracking number for all information pertaining to this signal installation. The **District** may also retain the "signal file number" which has been in use for many years as an internal reference.

If the header information is printed out, the inspector should verify the controller and conflict monitor manufacturer and serial number for inventory purposes.

Intentionally blank.

470 OTHER CONSIDERATIONS

This area is reserved for any material about other considerations that do not fit into the other sections of this chapter.

480 RESEARCH

This area is reserved for discussion of research related to traffic control signals.

Intentionally blank.

495 REFERENCE RESOURCES

495-1 General

Various reference resources that may be useful have been noted in ***Sections 193, 194 and 195***.

495-2 Traffic Signal Maintenance Inspection Manual

This manual outlines the performance measures for the **Organizational Performance Index (OPI)** for Traffic Signal Maintenance performed by **District** forces. A discussion of each of the signal inspection items is also presented. This manual is available from the **Office of Traffic Engineering**.

Intentionally blank.

496 FORMS INDEX

496-1 Signal Support Inspection Form

Form 496-1 can be used for inspection of signal supports, as noted in ***Section 421-2***.

496-2 Traffic Signal Stage 3 Check List

Form 496-2 is a sample Traffic Signal Stage 3 Check List, as noted in ***Section 441-2***.

496-3 Traffic Signal Controller Timing Chart for Actuated Signals

Form 496-3 is a sample Traffic Signal Controller Timing Chart, as noted in ***Section 441-2***.

496-4 Traffic Signal Detector Chart

Form 496-4 is a sample Traffic Signal Detector Chart, as noted in ***Section 441-2***.

496-5 Coordination Timing Chart

Form 496-5 is a sample Coordination Timing Chart, as noted in ***Section 441-2***.

496-6 Report of Electrical Tests

Form 496-6 is used for reporting the results of the standard electrical tests, as noted in ***Sections 450-11.3 and 450-11.4***.

496-7 Signal Inspection Form

Form 496-7 is the Signal Inspection Form described in ***Sections 460-9.2 and 460-10***.

496-8 Application to Install and Operate a Traffic Control Signal

Form 496-8 is used by village authorities to obtain permission to install and operate traffic control signals as described in ***Section 401-6.***

496-9 Application for Approval of Traffic Control Signal Operation

Form 496-9 is the operation plan for proposed village traffic control signals as described in ***Section 401-6.***

496-10 Permit for Operation of a Traffic Control Signal

Form 496-10 is the Traffic Control Signal Permit as described in ***Section 401-6.***

496-11 Application to Modify Operation of a Traffic Control Signal

Form 496-11 is for proposed modifications to village traffic control signals as described in ***Section 401-6.***

496-12 Signal Agreement for a Traffic Control Signal Installed, Maintained and Operated by a Local Agency

Form 496-12 is the Signal Agreement for proposed traffic control signals as described in ***Section 401-7***.

496-13 City Ordinance to Install, Maintain and Operate a Closed Loop System at Interstate Ramps within the Corporation Limits of the City

Form 496-13 is the City Ordinance for closed-loop systems at Interstate ramps within a corporation limit of a city, and described in ***Section 401-7***.

496-14 Signal Agreement Where the City Will Be Responsible for the Maintenance and Operation of a Closed Loop System

Form 496-14 is the Signal Agreement for a proposed **City** closed-loop signal system as described in ***Section 401-7***.

496-15 Signal Agreement Where ODOT Will Be Responsible for the Maintenance and Operation of a Closed Loop System

Form 496-15 is the Signal Agreement for a proposed **ODOT** closed-loop signal system as described in ***Section 401-7***.

496-16 Signal Agreement Where an Existing Traffic Control Signal Needs To Be Modified To Add a New Developer's Driveway/Approach

Form 496-16 is the Signal Agreement for proposed modification to a traffic control signal by a developer as described in ***Section 401-7***.

496-17 Signal Agreement for the Construction of a New Traffic Control Signal at a Developer's Driveway

Form 496-17 is the Signal Agreement for a proposed traffic control signal by a developer as described in ***Section 401-7***.

496-18 Signal Agreement for Modification of a Traffic Control Signal Where Everything Will Remain the Same Including the Energy Charges

Form 496-18 is the Signal Agreement Form described in ***Section 401-7***.

Form 496-1. Signal Support Inspection Form

Support Information

Support Identifier: _____ Date: _____

Route: _____ Direction: _____

Intersection of: _____and _____

Design No.: _____

Support Type: _____ Strain Pole _____ Mast Arm _____ Sign _____ School

_____ Other: _____

Foundation

_____ Concrete Condition _____ Soil Condition _____ Anchor Bolts/Nuts

Comments: _____

_____

Support Condition

_____ Galvanized _____ Painted _____ Wood

_____ Structural Members _____ Structural Connections _____ Down Guy

Damage? _____ Yes _____ No Pitting? _____ Yes _____ No

Surface Rust: _____ Minimal _____ Moderate _____ Severe

Comments: _____

_____

Inspected by: _____ Date: _____

Form 496-2. Traffic Signal Stage 3 Check List

A. General: *Written justification required (see Section F) (DNA) - Does Not Apply

1. Are the following items being used in the project:

   a) *Optically programmed signal heads _____
   b) *Mast arms _____
   c) *Thermoplastic markings (general) _____
   d) *Thermoplastic markings only at intersections _____
   e) Special control equipment
      1) *Priority control _____
      2) RR preemption _____
      3) *Traffic adjusted master_____
      4) Interconnection _____ : Type _____
   f) Combination supports _____
   g) Overhead lane control supports _____
   h) Are all Stage 2 comments compiled with or otherwise explained? _____
   i) Other (list): _____

2. Who is:

   a) furnishing signs _____
   b) erecting signs _____
   c) applying thermoplastic markings _____
   d) applying painted markings _____
   e) removing existing signs _____
   f) removing existing markings _____
   g) provide, maintain, remove temporary markings _____

B. Warrants

1. Have signal warrants for all intersections been resolved?

2. Are all unwarranted signals being removed? If answer is no, list intersections and agreed action at each intersection.

3. If unwarranted signals are not being removed, who is doing the upgrading and interconnecting of these signals and when will work be done?

4. Are traffic signal permits involved (i.e., is any signal within a village and on a State Route)? (Village is incorporated area with population of less than 5000.)

C. Utilities

1. Have the utility companies reviewed the plans and approved of the work in writing?

2. Are utility poles being used for interconnect?

3. Is power service by flat rate contract or meter?

4. Are disconnect switches required at power service points?

5. Will the power company run power service to the signal poles or will triplex service cable be run from power pole to signal pole as part of this project?

6. Are high voltage lines present in the area? 10 feet (3.0 meter) minimum clearance may be required. Check with power company for specific requirements.

7. Have proposed support locations been field checked for conflicts with overhead lines and underground facilities?

8. Do any lines go over/under railroad tracks?

D. Right-of-Way

1. Are any work agreements or easements required? (For placement of items such as loop detectors, pavement marking, etc. outside of the right-or-way limits.)

2. Are right-of-way (R/W) lines shown on signal intersection plan sheets for checking pole foundations, conduit runs, etc., and are all items within the R/W? Note: certain procedures require temporary easements, etc., even though actual construction is within the R/W (i.e., jacking conduit usually requires a jacking pit).

E. Equipment Responsibility

1. Existing signal installation - Does anyone besides contractor retain existing equipment? If answer is yes, name other parties involved.

2. Are any equipment items being reused? If yes, are these items clearly defined on plan sheets and has consultant field checked these items?

3. Has ownership of all items to be removed been established (control equipment, poles, luminaires, etc., by city, state, utility companies, etc.)?

4. Is the maintaining agency of each signal clearly discernible on the plans?

F. Justification

1. Is justification needed and who will submit it (refer to Section A)?

   a) Thermoplastic _____
   b) Optically programmed signal heads _____
   c) Mast arm supports _____
   d) Combination supports (commitment on installment of lighting) _____
   e) Traffic adjusted signal systems _____
   f) Justification for proprietary items _____
   g) Preemption _____
   h) Other (list) _____

Form 496-3. Traffic Signal Controller Timing Chart for Actuated Signals

Intersection _____

Maintaining Agency _____

Start Up Start In: ○ y/r flash or ○ all red Time for Flash or All Red: _____ First Phases(s): * _____ & *_____ Color Displayed ○ Green; ○ Yellow	Dual Entry ○ Rest In Red: Ring 1 ○ Ring 2 ○				
	Overlap	**A**	**B**	**C**	**D**
	Phases				

Interval or Feature		**Controller Movement No.**							
Intersection Movement		1	2	3	4	5	6	7	8
Minimum Green (Initial)	(Sec.)								
Added Initial	*(Sec./Actuation)								
Passage Time (Preset Gap)	(Sec.)								
Time Before Reduction	*(Sec.)								
Minimum Gap	*(Sec.)								
Time To Reduce	*(Sec.)								
Maximum Green I	(Sec.)								
Maximum Green II	(Sec.)								
Yellow Change	(Sec.)								
All Red Clearance	(Sec.)								
Walk	(Sec.)								
Pedestrian Clearance	(Sec.)								
Recall	Maximum (On/Off)								
	Minimum (On/Off)								
	Pedestrian (On/Off)								
Memory (On/Off)									
Call to Non Actuated	No. 1								
	No. 2								

* Volume Density Controls

Form 496-4. Traffic Signal Detector Chart

Loop Designation	Size ft. (m)	No. of Turns	Pulse or Presence	Delay (sec.)	Extension (sec.)	Override Phase	Connect to Detector Unit (unit-channel)	Associated Controller Phase

Form 496-5. Coordination Timing Chart

	Timing Program (Cycle No.)						
	1	2	3	4	5	6	7
Description							
Time Period in Effect							
Cycle Length (sec.)							
(1) Offset (reset) No. 1 (sec.)							
(1) Offset No. 2 (sec.)							
(1) Offset No. 3 (sec.)							
(2) Force-off							
(2) Force-off							
(2) Force-off							
Length of Hold-Release or Yield (Permissive) (sec.)							

1. Offsets are measured from incoming master synch pulse time to hold - release (yield) at end of major street phase, which is phase(s) numbered _____. End of major street phase is end of green/beginning of yellow, except where pedestrian timing is provided, in which case it is end of green plus walk/beginning of green - plus flashing don't walk.

2. Force off is measured from the hold - release (yield).

Form 496-6. Report of Electrical Tests

DATE ___ / ___/ ___ SHEET ____ OF _____

PROJECT NO. _____ COUNTY _____ ROUTE _____ SECTION _____

Short Circuit Test 632.28(C)				Circuit Continuity Test 632.28(D) (Zero or Negligible Ohms Required)			
Pairs Measure d	Ohms	Pairs Measure d	Ohms	Pairs Measure d	Ohms	Pairs Measure d	Ohms

Cable Insulation (Megger) Test 632.28(E) (All Conductors of Cables Jumpered Together)		
Locations Cabinet/Pull box	Type of Cable	MegOhms 10 Min.

Ground Test For Traffic Signals 632.28(B) and 625.19	
Ground Rod Location: Station of Pole or Cabinet	Resistance Ohms

Functional Test: 632.28(F)	OK
Incoming AC 120 Volts	☐
Cabinet Fan, Thermostat, Convenience Outlet, and Lamp Operation	☐
Controller timing set as per plan or approved by the Engineer	☐
Switches	☐
Controller functions	☐
Detector Units detect all vehicles	☐
Detector Units do not give extraneous calls	☐
Flash Switch Transfer	☐
Monitor is not activated by normal operations	☐
Monitor is not activated by manipulation of cabinet switches	☐
Monitor activated by artificial conflict	☐
Signal transfers to flash when monitor is disconnected	☐

Form 496-7. Signal Inspection Form

TRAFFIC SIGNAL FILE NUMBER: LOCATION:
COUNTY AND ROUTE NUMBER: ODOT SIGNAL SYSTEM NUMBER:

DATE INSPECTED: _____/_____/_____** **Points:** _____ TIME REQUIRED: _____
CONTROLLER TYPE: _____ ODOT NUMBER: _____
MONITOR MODEL: _____ CM: ☐ ODOT NUMBER: _____
MMU: ☐ COORDINATION TYPE: _____
INSPECTED BY: _____ TITLE: _____
INSPECTED BY: _____ TITLE: _____

1 TRAFFIC SIGNAL HEAD	**Satisfactory**	**Unsatisfactory**	**N/A**	**Repaired**	**Points**
1.1 Alignment **	☐	☐	☐	☐	_____
1.2 Date re-lamp **	Date re-lamped ____/_____/_____				_____
1.3 Clearance Height**	Clearance Ft._____ In._____			☐	_____
1.4 Condition including the following: lens (dirty, burns, holes), lamp orientation, visors, lamps (all burning), signal head cable condition(splices/wear), Prepare to Stop When Flashing sign, above ground detection, water leaks	☐	☐	☐ ☐		
2 OVERHEAD SIGNAL SUPPORT SYSTEM					
2.1 Condition including the following: messenger wire for rust, grips, 3-bolt clamps, pole clamp bolts tight, wire entrance and pin wear, span wire signing, pole clamp assembly and clevis pin wear, lashing rods, signal cable	☐	☐	☐	☐	
3 CONTROLLER & CABINET					
3.1 Intersection documentation**	☐ Present & Current	☐ Present & Not Current	☐ Not Present _____		
3.2 Conflict Monitor or MMU (6 mo. inspection) **	Date: ____/_____/_____				_____
3.3 All detection operational**	☐ All working	☐ 1 Detector Failed	☐ 2 or more Failed		_____
3.4 Wires and cables labeled	☐	☐	☐	☐	
3.5 Cabinet sealed to foundation	☐	☐	☐	☐	
3.6 Lock condition (including Power Service)	☐	☐	☐	☐	
3.7 Filter Clean (Size___X____X____)	☐	☐	☐	☐	
3.8 Cabinet lamp working	☐	☐	☐	☐	
3.9 GFCI receptacle (test)	☐	☐	☐	☐	
3.10 Wire terminations tight	☐	☐	☐	☐	
3.11 Prepare To Stop When Flashing Timing (Ph.__= ____sec.) (Ph.__= ____sec.)	☐	☐	☐	☐	
3.12 Load switch indicators lighting	☐	☐	☐	☐	
3.13 Preemption	☐	☐	☐	☐	
3.14 Cabinet earth ground (___ohms)	☐	☐	☐	☐	
3.15 Lightning arresters	☐	☐	☐	☐	
3.16 Housing conduit sealed	☐	☐	☐	☐	
3.17 Cabinet fan / thermostat	☐	☐	☐	☐	
3.18 Cabinet clean? need vacuuming?	☐	☐	☐	☐	
3.19 Cabinet hinges, need lubricated?	☐	☐	☐	☐	

**** USED IN DISTRICT OPI RATING****

		Satisfactory	Unsatisfactory	N/A	Repaired	Points
4	**SIGNAL STRAIN AND WOOD POLES**					
4.1	Anchor bolts tight	☐	☐	☐	☐	
4.2	Hand hole covers in place	☐	☐	☐	☐	
4.3	Pole grounds	☐	☐	☐	☐	
4.4	Pole cap in place	☐	☐	☐	☐	
4.5	Concrete foundation	☐	☐	☐	☐	
4.6	Down guys	☐	☐	☐	☐	
4.7	Wood pole condition	☐	☐	☐	☐	
5	**POWER SERVICE**					
5.1	Condition including:	☐	☐	☐	☐	
	weather head, wire chaffing, splices at top of pole, switch box condition, meter box					
6	**LOOP DETECTORS & SEALANT**					
6.1	Cracks filled with sealant	☐	☐	☐	☐	
6.2	No exposed wires	☐	☐	☐	☐	
6.3	No pavement cracks (Note crack repair in comments for crack sealant repair crew scheduling)					
7	**PEDESTRIAN OPERATION**					
7.1	Including:	☐	☐	☐	☐	
	pedestrian head aim/alignment, pedestrian head working					
8	**PULL BOXES**					
8.1	Condition including:	☐	☐	☐	☐	
	all located, lids on all, draining properly, wires and cables labeled, wires and conduit in good shape, conduit sealed, lid marked **"Traffic"**					

Item #	Comments

Form 496-8. Application to Install and Operate a Traffic Control Signal

APPLICATION
FOR PERMISSION TO INSTALL/MODIFY AND OPERATE
A TRAFFIC CONTROL SIGNAL

To: District Deputy Director Date: _____

District _____
_____
_____

In accordance with the provisions of Sections 4511.10 and 11, Ohio Revised Code, the incorporated Village of _____ does hereby request authority to install/modify and operate a traffic control signal at the intersection of _____Street (State Route _____) and _____ Street (State Route _____).

The enclosed traffic engineering study performed by _____and dated _____ indicates that the proposed signal is justified by warrant(s)_____.

This application is made with the understanding that, if approved by you, the signal will comply with the requirements as stipulated by law.

Village of _____

County of _____ _____
(Signature of Elected Official)

TRAFFIC CONTROL SIGNAL
AUTHORIZATION

To: Village of _____

You are hereby authorized to install/modify a traffic control signal at this intersection. This is subject to approval, by the Ohio Department of Transportation of the Village prepared operation plan (sample attached) with the understanding that the traffic control signal will comply with the requirements of the Ohio Manual of Uniform Traffic Control Devices.

The Operations Plan should be submitted as soon as possible because this authorization will automatically Expire 180 days from the date issued unless otherwise extended by the Ohio Department of Transportation at the request of the Village.

_____ _____
Date District Deputy Director

For a copy of this form, contact the Office of Traffic Engineering, 1980 West Broad Street, Columbus, Ohio 43223.

Form 496-9. Application for Approval of Traffic Control Signal Operation

REQUEST FOR APPROVAL OF A TRAFFIC CONTROL SIGNAL OPERATION PLAN

To: District Deputy Director Date _____

District _____

_____

_____

The traffic control signal we have proposed for the intersection of _____Street (State Route _____) and _____Street (State Route _____)would function in accordance with the attached operation plan dated _____.

Village of _____

County of _____ _____

(Signature of Elected Official)

OPERATION PLAN APPROVAL

The operation plan has been approved/approved with modification (see explanation of modification below) and permission is hereby granted to proceed with the installation.

- Explanation of Approval With Modification -

_____

_____

_____

_____ _____

Date District Deputy Director

CERTIFICATION

Upon completion of the installation/modification as specified in the approved operation plan, fill in the certification below and return the attached copy to the District Deputy Director.

I hereby certify that the Village of _____ has installed/ modified and will operate the above described traffic control signal in accordance with the approved operation plan and OMUTCD standards. This signal was placed in operation on _____.

_____ Signed _____

Title _____

For a copy of this form, contact the Office of Traffic Engineering, 1980 West Broad Street, Columbus, Ohio 43223.

Form 496-10. Permit for Operation of a Traffic Control Signal

STATE OF OHIO
DEPARTMENT OF TRANSPORTATION
OFFICE OF TRAFFIC ENGINEERING
P.O. BOX 899
COLUMBUS, OHIO 43216-0899

Permit Number _____
Village _____
County _____
Intersection _____
_____

PERMIT
FOR THE OPERATION OF A TRAFFIC CONTROL SIGNAL
ON A STATE HIGHWAY

Under authority of Sections 4511.10 and 11, Ohio Revised Code, the Director of Transportation, in response to the attached Application and Engineering Study dated _____, hereby approves, subject to the condition and restrictions set forth herein, the operation of a traffic control signal at the location described below:

I. Location of Signal: _____

_____

II. Operation:

This traffic control signal shall be operated in accordance with the Ohio Manual of Uniform Traffic Control Devices for Streets and Highways (OMUTCD). Signal phasing and hours of operation as a stop and go signal or a flashing signal shall be in accordance with the latest approved schedule. Initial settings shall be as submitted with the "Request for Approval of a Traffic Control Signal Operation Plan." (Note: Signals maintained as "School Signals" or "Seasonal Signals," those signals authorized to operate only during certain months of each year, shall be hooded or taken down during the period(s) such signals are not authorized to operate.)

III. Village authorities are responsible for periodic review of this signal.

The right is reserved to require the timings schedule of the signal, the days upon which it is operated, and the hours during which it is operated to meet the approval of the Director of Transportation. Revisions to the interval timing or hours of operation schedules shall be submitted the District Deputy Director for approval. Any other aspect of the traffic control signal operation covered by this permit, shall not be altered without the specific approval of the Director of Transportation, after proper application has been made by the permittee.

This permit is revocable upon thirty days notice by the Director of Transportation if in his opinion the signal is not being operated or maintained in a proper manner, or that traffic would be better served by its elimination.

_____ _____
Date Director of Transportation

Form 496-11. Application to Modify Operation of a Traffic Control Signal

APPLICATION
TO MODIFY TIMING OR HOURS OF OPERATION
FOR A TRAFFIC CONTROL SIGNAL

To: DISTRICT DEPUTY DIRECTOR
DISTRICT _____
_____
_____

Date _____
Ref: Permit No. _____

The incorporated Village of _____ hereby requests authority to modify the ☐ timing and/or ☐ hours of operation of the traffic control signal at the intersection of _____Street (State Route _____) and _____ Street (State Route _____), as noted on the attached timing chart.

The change(s) is/are requested for the following reasons:

1_____

2_____

3_____

This application is made with the understanding that, if approved, the signal timing and hours of operation will comply with the timing chart which will be returned with the approved change.

Village of _____

County of _____

_____
(Signature of Elected Official)

To: Village of _____

The attached interval timing and hours of operation dated _____ are herewith approved.

_____
Date

_____
District Deputy Director

For a copy of this form, contact the Office of Traffic Engineering, 1980 West Broad Street, Columbus, Ohio 43223

Form 496-12. Signal Agreement for a Traffic control Signal Installed, Maintained and Operated by a Local Agency

AGREEMENT
City Installed and Owned After Installation

This Agreement, made this_____ day of _____, 200__ by and between the Ohio Department of Transportation whose address is _____ (hereinafter referred to as "ODOT"), and the _____(Mayor)_____of the City of_____ __ whose address is _____ (hereinafter referred to as the "City");

WITNESSETH THAT:

In consideration of the mutual covenants hereinafter contained and for the purpose of installing and maintaining a traffic signal on State Route_____, in_____ County, Ohio, the City of_____; and

WHEREAS, the City and ODOT have identified the need for a traffic signal on SR_____, in the City of _____; and

WHEREAS, the signalized intersection of SR_____ and_____, (hereinafter referred to as the "Signal") are within the corporation limits of the City; and

WHEREAS, each of the aforesaid agencies have an interest in the efficient operation of the traffic signal at the subject intersection and in the surrounding area; and

WHEREAS: the State cannot install the proposed signal at State expense; and

WHEREAS: the City wishes to have the proposed traffic signal installed; and

WHEREAS: the location of the traffic signal and appurtenances shall be in accordance with Exhibit "A", attached hereto and made a part thereof.

That the _____(Mayor)_____ of the City of _____ is hereby empowered and directed on behalf of the City to enter into agreements with the District Deputy Director of the ODOT.

NOW THEREFORE, IT IS AGREED BY AND BETWEEN THE PARTIES AS FOLLOWS:

1.1 CONSTRUCTION

The City shall or shall cause to be prepared the necessary plans for the proposed traffic signal and they shall be in accordance with the standards set forth in the Ohio Manual of Uniform Traffic Control Devices. Said plans shall be reviewed and approved by ODOT prior to release to the builder and prior to construction.

The City agrees that the design and installation of the subject signal will conform to the plan included in this Agreement as Exhibit "A".

The City shall furnish all material, labor, tools and equipment necessary to install the signal so it is complete and ready for operation. Such material shall be subject to approval by ODOT prior to installation.

II. BONDS AND ASSURANCES

The City shall obtain or cause to be obtained a performance bond in the amount of **(insert cost of construction/modification of traffic signal)** ($_____), which shall indemnify the State of Ohio and ODOT against all damages suffered by the failure of the City to perform the Agreement according to its provisions and in accordance with the plan contained in Exhibit "A", Ohio Revised Code (R.C.) §4511.10, and other requirements deemed necessary for the acceptance by the State of Ohio of the completed traffic control device(s).

The performance bond described in Paragraph 1 of Section II of this Agreement, shall include, in addition to the obligation to faithfully perform this Agreement, the obligation to pay all lawful claims of subcontractors, material people and laborers for labor performed and materials furnished in the carrying forward, performing or completion of the construction and erection of the traffic control device(s).

The form of this Bond shall be in accordance with R.C. §153.57.

III. RIGHT-OF-ENTRY

In consideration of the mutual promises and benefits accruing to the parties hereto, the State grants to the City the Right-Of-Entry upon the State's right-of-way for the purpose of installing the signal described in this Agreement. Said Right-Of-Entry, is made subject to all other easements, dedications, uses or restrictions affecting said right-of-way whether of record or otherwise, except that the City shall not be subject to unrecorded conditions unless notified in writing by the State of the exact nature of such conditions. The State reserves all rights in the property which is the subject of this Right-Of-Entry.

IV. SPECIAL PROVISIONS

This agreement is contingent upon the safe operation of the signal in respect to the normal queuing of traffic on the SR _____ off ramp. If this traffic queue extends onto the SR _____ mainline, ODOT reserves the right to alter the traffic signal, the roadway or other

appurtenances as it deems necessary to eliminate this condition, if the parties do not agree.

V. OPERATION

If after the installation of the traffic signal, either party determines or believes that modified timing or coordination of the equipment is necessary to improve the flow of traffic at the location, the parties shall consult on the modification felt necessary and, to the extent reasonably possible, shall agree on the modifications to be made and the payment of the costs attendant thereto, if any. If the parties do not agree, ODOT reserves the right to alter the signal timing as it deems necessary to best serve the motoring public.

VI. INDEMNIFICATION

The City, on behalf of itself, its contractors, subcontractors, workmen or agents agrees to procure an insurance policy naming the State of Ohio and ODOT as the insured parties in the amount necessary to adequately cover any damage to persons or property resulting from the construction of the project as described in this Agreement. The minimum amount of insurance shall be one million dollars ($1,000,000) per person and three million dollars ($3,000,000) per occurrence.

In no event shall the City, its contractors, subcontractors, workers, or agents be considered agents or employees of the State of Ohio or ODOT.

VII. INSPECTIONS

The City shall permit the State of Ohio, ODOT or its authorized agent to enter upon the site for the purposes of inspection at any reasonable time or times during the time of this Agreement, when accompanied by a City Traffic Engineering Division employee.

VIII COMPLETION OF CONSTRUCTION

When the signal construction has been completed and before it is placed in operation, it shall be inspected by ODOT, which will determine whether the signal conforms to plans and Exhibit "A", as well as any relevant statute or regulation.

If the signal is found to be in conformity with all preapproved as built plans, regulations and statutes, the State will accept the signal, at which time the State shall transfer ownership and maintenance responsibility for all signal equipment and traffic control devices related to the project governed by this Agreement.

IX. NOTICES

Notices given under the terms of this Agreement shall be deemed sufficiently received if in the case of notice to either party, such notice is mailed by certified or registered United States Mail or is personally delivered to either party's above referenced address.

X. GOVERNING LAW

This Agreement and the performance thereof shall be governed and interpreted, where applicable, solely by the laws of the State of Ohio.

XI. SEVERABILITY

If, and to the extent that any court or competent jurisdiction holds any provisions or part thereof of this Agreement to be invalid or unenforceable as a final nonappealable order, such holding shall in no way affect the validity of the remainder of this Agreement.

XII. ENTIRE AGREEMENT

This Agreement constitutes the entire agreement between the City and ODOT and supersedes all previous written and oral negotiations, commitments and understandings. Its terms, conditions and covenants shall not be altered or otherwise amended except pursuant to an instrument in writing signed by each of the parties hereto and making specific reference to this Agreement.

XIII. CONSIDERATION

Each party to this Agreement recognizes that the rights and benefits received by the respective parties to this Agreement are valuable and substantial; enforcement of this Agreement cannot be challenged for lack of consideration.

This Agreement shall be binding upon and inure to the benefit of the parties, their respective successors and assigns.

XIV. TERM

This Agreement shall remain in full force and effect between the parties until the construction is completed, as determined by ODOT in good faith and based on engineering judgement, at which time ODOT shall notify the City.

The aforegoing is accepted as a basis for proceeding with the improvement herein described.

For the City of _____, Ohio

Witness: _____

_____Date _____
Contractual Officer

For the State of Ohio
Ohio Department of Transportation

Witness: _____

_____ Date _____
District Deputy Director

Form 496-13. City Ordinance to Install, Maintain and Operate a Closed Loop System at Interstate Ramps within the Corporation Limits of the City

Name of Street _____ Ordinance No. _____

Route No. _____ Date _____

An emergency ordinance enacted by the City of _____, _____ County, Ohio, in the matter of the hereinafter described improvement and to request cooperation by the District Deputy Director of Transportation.

WHEREAS, the City has identified the need for and proposes to maintain the electronic traffic signal located at the junction of the _____ off ramp and SR ___, _____ County.

WHEREAS, the intersection of the _____ off ramp at SR _____, located at SLM _____ within the corporation limits of the City of _____, Ohio: and

WHEREAS, the State and City desire that the signal located at the above intersection be operated and controlled by the City as a part of a complete closed loop computerized signal system for the surroundings area: and

WHEREAS, the interconnection of the _____ off ramp signal with the City's closed loop signal system would promote progressive movement of vehicular traffic: and

WHEREAS: the location of the traffic signal(s) and appurtenances shall be in accordance with Exhibit "A", attached hereto and made a part thereof: and

WHEREAS, each of the aforesaid agencies have an interest in the final configuration of the traffic signal at the subject intersection:

AND, That the _____(Mayor/Officials Name)_____ of _____, is hereby empowered and directed on behalf of the City to enter into agreements with the Director of Transportation.

NOW THEREFORE, Be it ordained by the Council of the City of _____, Ohio:

I. EQUIPMENT

Traffic signal equipment and appurtenances necessary to efficiently operate the proposed signal at the subject public road intersection and the necessary interconnection equipment will be provided initially by the contractor as part of a proposed traffic control project. Such material shall be subject to approval by ODOT prior to installation. (Or: Such materials shall be in accordance with the Construction and Material Specifications, Section 625.04.) The state will not contribute financially or otherwise to the closed loop signal system.

II. CONSTRUCTION

The signal shall be reconstructed in accordance with the standards set forth in the Ohio Manual of Uniform Traffic Control Devices, as identified on Exhibit "A".

III. PERFORMANCE BOND INSURANCE AND INDEMNIFICATION

The signal installation contractor shall be responsible for securing the bonds, assurances and indemnification.

VI. MAINTENANCE

The City shall provide all maintenance required for the efficient operation of the traffic control signal system including the subject signal. Maintenance shall include those functions necessary for maintaining the signal system operation at all times including, but not limited to, repair and/or replacement of all malfunctioning signal components, knockdowns, lightning strikes and embedded loop failures, necessary to restore the signal system to operational condition. The City is required to keep accurate records of all work, materials used, corrective actions, dates and times. The State will perform periodic inspections to monitor the maintenance of the new signal.

V. ELECTRICAL ENERGY CHARGES

It shall be the responsibility of the City to furnish and assume the cost of all electrical energy charges for the operation of the signal for the duration of this ordinance.

VI. MAINTENANCE FEE

It shall be the responsibility of the City to assume the cost of maintaining the proper operation of the signal for the duration of this ordinance.

VII. OPERATION

A. It is understood that the day to day management of the closed loop computerized system will be the responsibility of the City

of _____. However, if the State determines that the subject signal operation of the closed loop system timing patterns and program hinders the flow of traffic on the interstate, the City of _____ agrees to implement mitigating measures to the satisfaction of the State and in accordance with procedures outlines in this Ordinance.

B. The City will maintain the following State approved contracts during the life of this Ordinance:

I. Maintenance Contract: A qualified maintenance contractor will be selected with approval by the State.

II. Operational Contract: The system will be operated at all times by a qualified operational consultant approved by the State and experienced in closed loop systems.

VIII. SPECIAL PROVISIONS

This ordinance is contingent upon safe operation and maintenance of the ramp signal, as determined solely by the State. If at any time the State determines that the ramp signal is being operated in an unsafe manner or improperly maintained; its control and operation will be returned to the State after written notification by the State.

IX. AUTHORITY TO REGULATE TRAFFIC

This Ordinance does not alter or relieve the State from its responsibility to regulate traffic on its roads and highways.

X. NOTICES

Notices required under the terms of this Ordinance shall be deemed sufficiently given if such notice is mailed by certified or registered United States Mail or personally delivered to either party's above referenced address.

XI. GOVERNING LAW

This ordinance and the performance thereof shall be governed and interpreted, where applicable, solely by the laws of the State of Ohio.

XII. SEVERABILITY

If and to the extend that any court of competent jurisdiction holds any provisions or part of this ordinance to be invalid or unenforceable as a final nonappealable order, such holding shall in no way affect the validity of the remainder of this Ordinance.

XIII. ENTIRE ORDINANCE

This Ordinance and the attachments hereto, if any, constitute the entire ordinance between the City and the State and supersede all previous written and oral negotiations, commitments and understandings. Its terms, conditions and covenants shall not be altered or otherwise amended except pursuant to an instrument in writing signed by each of the parties hereto and making specific reference to this Ordinance.

XIV. CONSIDERATION

Each party to this Ordinance recognizes that the rights and benefits received by the respective parties to this Ordinance are valuable and substantial: enforcement of this Ordinance cannot be challenged for lack of consideration.

XV. TERM

This Ordinance shall remain in full force and effect between the parties until the signal installation reaches the end of its useful life because of normal deterioration to its major components as determined by ODOT in good faith and based on engineering judgement, at which time ODOT shall notify the City. If the signal is still required, as determined by ODOT, a new ordinance shall be negotiated between ODOT and the City to install and maintain a new replacement signal.

This Ordinance shall be binding upon and inure to the benefit of the parties, their respective successors and assigns.

This ordinance is hereby declared to be an emergency measure by reason of the need for expediting highway improvements to promote highway safety and provided it receives the affirmative vote of two-thirds of the members elected to Council. It shall take effect and be in force immediately upon its passage and approval by the Mayor: Otherwise, it shall take effect and be in force from and after the earliest period allowed by law.

Passed: _____, 19____.

Attest: _____ _____
Clerk Mayor

Attest: _____ _____
President of Council

CERTIFICATE OF COPY

STATE OF OHIO

City of _____

County _____

I, _____, as Clerk of the City of _____, Ohio, do hereby certify that the foregoing is a true and correct copy of ordinance adopted by the legislative Authority, of the said City on the _____ day of _____, 20___, that the publications of such ordinance has been made and certified of record according to law: that no proceedings of such ordinance have been taken: and that such ordinance and certificate of publication thereof are of record in ordinance Record No. _____, Page _____.

IN WITNESS WHEREOF, I have hereunto subscribed my name and affixed my official seal, this _____ day of _____, 20___.

(SEAL)

_____
Clerk

City of _____, Ohio

****

The aforegoing is accepted as a basis for proceeding with the improvement herein described.

For the City of _____, Ohio

Witness: _____

_____, Date _____
Contractual Officer

For the State of Ohio
Ohio Department of Transportation

Witness: _____

_____, Date _____
District Deputy Director

Form 496-14. Signal Agreement Where the City Will Be Responsible for the Maintenance and Operation of a Closed Loop System

AGREEMENT
City Controlled Closed Loop System

This Agreement, made this_____ day of _____, 200__ by and between the __(Insert your district's address here)_ (hereinafter referred to as "ODOT"), and the _____(Mayor)_____of the City of _____ whose address is _____ _____ (hereinafter referred to as the "City");

WITNESSETH THAT:

In consideration of the mutual covenants hereinafter contained and for the purpose of installing and maintaining a closed loop traffic signal system on State Route ___, in _____ County, Ohio, in and _____ of the City of _____; and

WHEREAS, the City and ODOT have identified the need for a closed loop traffic signal system on SR ___, in and _____ of the City; and

WHEREAS, the signalized intersection of SR _____ and _____, and the signalized intersection of _____ and _____ (hereinafter referred to as the "Signal(s)") are within the corporation limits of the City; and

WHEREAS, ODOT and the City desire that the timing of the Signal(s) be controlled by the City as part of a complete closed loop computerized signal system for the surrounding area; and

WHEREAS, the interconnection of the Signal(s) with the City's closed loop signal system would promote progressive movement of vehicular traffic; and

WHEREAS, each of the aforesaid agencies have an interest in the efficient operation of the traffic signal(s) at the subject intersections and in the surrounding area; and

That the _____(Mayor)_____ of the City of _____ is hereby empowered and directed on behalf of the City to enter into agreements with the District Deputy Director of the ODOT.

NOW THEREFORE, IT IS AGREED BY AND BETWEEN THE PARTIES AS FOLLOWS:

I. CONSTRUCTION

ODOT does hereby grant to the City and its employees and contractors the right to install, within the State's Right-of-Way, the items needed to implement the closed loop signal system. Work will take place on SR ___ at the signalized intersection of SR _____ and ___ ___, and on _____ between _____ and SR ___.

Installation work will include loop detectors, underground and aerial lead-in cable, fiber optic communication cable, and other appurtenances necessary to implement the closed loop signal system. Installation work will include the utilization of existing conduit and pull boxes from the existing signal installation(s). Access to the signal housing(s) will be needed for terminating cables and connecting control equipment.

II. MAINTENANCE

The City shall provide all maintenance for the traffic signal(s). This includes but is not limited to: call outs for signal malfunctions and burned out lamps; repair and replacement of malfunctioning signal components or those damaged either by accident or deterioration; maintenance of pre-emption systems; and replacement or repair of damaged loop detectors or lead-in cables, including the loop detectors installed as a part of the closed loop signal system, located on _____.

The City shall be responsible for maintaining the fiber optic cable connecting the City of _____ traffic signal(s) to ODOT's traffic signal(s) at SR ___ and _____. This cable will be installed on SR ___ between _____ _____.

The City shall also be responsible for any traffic studies and for any changes to the existing equipment by additions or alterations necessitated by changing traffic conditions.(e.g. changing lane usage, adding lanes, signal heads, or turn phases)

III. ELECTRICAL ENERGY CHARGES

The State shall remain responsible for the cost of all electrical energy charges for the operation of the signal(s).

IV. OPERATION

It is understood that the day to day management of the closed loop computerized system will be the responsibility of City.

If after the installation of the closed loop system and coordination of the traffic signal(s), either party determines or believes that modified timing or coordination of the equipment is necessary to improve the flow of traffic at the location, the parties shall consult on the modification felt necessary and, to the extent reasonably possible, shall agree on the modifications to be made and the payment of the costs attendant thereto, if any. If the parties do not agree, ODOT reserves the right to alter the signal timing as it deems necessary to best serve the motoring public.

V. RIGHT-OF-ENTRY

In consideration of the mutual promises and benefits accruing to the parties hereto, the State grants to the City the Right-Of-Entry upon the State's right-of-way for the purpose of maintaining the signal(s) described in this Agreement. Said Right-Of-Entry, is made subject to all other easements, dedications, uses or restrictions affecting said right-of-way whether of record or otherwise, except that the City shall not be subject to unrecorded conditions unless notified in writing by the State of the exact nature of such conditions. The State reserves all rights in the property which is the subject of this Right-Of-Entry.

VI. SPECIAL PROVISIONS

This agreement is contingent upon the safe operation of the signal(s) in respect to the normal queuing of traffic on the _____ off ramp. If this traffic queue extends onto the IR __ mainline, ODOT reserves the right to alter the traffic signal(s), the roadway or other appurtenances as it deems necessary to eliminate this condition, if the parties do not agree.

VII. INDEMNIFICATION

The City, on behalf of itself, its contractors, subcontractors, workers, or agents agrees to indemnify and hold harmless the State of Ohio, ODOT and their representatives from any liability, cause of action, cost, or expense, including attorney's fees, incurred in connection with or arising from loss or damage to property or injury or death of any person resulting from the project as described in this Agreement. The City shall defend the State of Ohio and ODOT, their representatives, individually and in their official capacity, in any such lawsuit or claim.

In no event shall the City, its contractors, subcontractors, workers, or agents be considered agents or employees of the State of Ohio or ODOT.

VIII. REMOVAL

When it is determined by ODOT that said closed loop signal system is no longer essential to the safety, convenience and welfare of the traveling public, or that the maintenance of traffic in general would be better served by the discontinuance of the closed loop system, then all such equipment, material and devices installed, maintained and operated by ODOT shall be removed or abandoned by ODOT at no expense to the City. All salvageable materials and equipment shall be returned to ODOT's signal inventory and the parties shall be relieved of all obligations under this Agreement.

The determination that the closed loop system involving the signal(s) within the City is no longer useful or desirable shall be made by ODOT, in any reasonable manner, including, but not limited to, findings based on a traffic engineering study.

IX. NOTICES

Notices given under the terms of this Agreement shall be deemed sufficiently received if in the case of notice to either party, such notice is mailed by certified or registered United States Mail or is personally delivered to either party's above referenced address.

X. GOVERNING LAW

This Agreement and the performance thereof shall be governed and interpreted, where applicable, solely by the laws of the State of Ohio.

XI. SEVERABILITY

If, and to the extent that any court or competent jurisdiction holds any provisions or part thereof of this Agreement to be invalid or unenforceable as a final nonappealable order, such holding shall in no way affect the validity of the remainder of this Agreement.

XII. ENTIRE AGREEMENT

This Agreement constitutes the entire agreement between the City and ODOT and supersedes all previous written and oral negotiations, commitments and understandings. Its terms, conditions and covenants shall not be altered or otherwise amended except pursuant to an instrument in writing signed by each of the parties hereto and making specific reference to this Agreement.

XIII. CONSIDERATION

Each party to this Agreement recognizes that the rights and benefits received by the respective parties to this Agreement are valuable and substantial; enforcement of this Agreement cannot be challenged for lack of consideration.

This Agreement shall be binding upon and inure to the benefit of the parties, their respective successors and assigns.

XIV. TERM

This Agreement shall remain in full force and effect between the parties until the closed loop system is no longer useful or desirable, as determined by ODOT in good faith and based on engineering judgement, at which time ODOT shall notify the City. The closed loop system shall be removed and this Agreement shall terminate.

The aforegoing is accepted as a basis for proceeding with the improvement herein described.

For the City of _____, Ohio

Witness:_____

_____ Date _____
Contractual Officer

For the State of Ohio
Ohio Department of Transportation

Witness:_____

_____ Date _____
District Deputy Director

Form 496-15. Signal Agreement Where ODOT Will Be Responsible for the Maintenance and Operation of a Closed Loop System

AGREEMENT
State Controlled Closed Loop System

This Agreement, made this_____ day of _____, 200__ by and between the Ohio Department of Transportation whose address is (replace with District's address) (hereinafter referred to as "ODOT"), and the ____(Mayor)_____of the City of _____ whose address is _____ (hereinafter referred to as the "City");

WITNESSETH THAT:

In consideration of the mutual covenants hereinafter contained and for the purpose of installing and maintaining a closed loop traffic signal system on State Route ___, in _____ County, Ohio, in and ___ of the City of _____; and

WHEREAS, the City and ODOT have identified the need for a closed loop traffic signal system on SR ___, in and ___ of the City; and

WHEREAS, the signalized intersection of SR __ and _____, and the signalized intersection of _____ and _____(hereinafter referred to as the "Signals") are within the corporation limits of the City; and

WHEREAS, ODOT and the City desire that the timing of the signals be controlled by ODOT as part of a complete closed loop computerized signal system for the surrounding area; and

WHEREAS, the interconnection of the signal(s) with ODOT's closed loop signal system would promote progressive movement of vehicular traffic; and

WHEREAS, each of the aforesaid agencies have an interest in the efficient operation of the traffic signal(s) at the subject intersections and in the surrounding area; and

That the _____(Mayor)_____ of the City of _____ is hereby empowered and directed on behalf of the City to enter into agreements with the Director of Transportation.

NOW THEREFORE, IT IS AGREED BY AND BETWEEN THE PARTIES AS FOLLOWS:

I. CONSTRUCTION

The City does hereby grant ODOT and its employees and contractors the right to install, within the City corporation limits, the items needed to implement the closed loop signal system. Work will take place on SR ___ at the signalized intersection of SR _____ and ___ _____, and on _____ between _____ and SR ___.

Installation work will include loop detectors, underground and aerial lead-in cable, fiber optic communication cable, and other appurtenances necessary to implement the closed loop signal system. Installation work will include the utilization of existing conduit and pull boxes from the existing signal installations. Access to the signal housing(s) will be needed for terminating cables and connecting control equipment.

II. MAINTENANCE

The City shall continue to provide all maintenance for the signal(s) within the corporation limits of the City. This includes but is not limited to: call outs for signal malfunctions and burned out lamps; repair and replacement of malfunctioning signal components or those damaged either by accident or deterioration; maintenance of pre-emption systems; and replacement or repair of damaged loop detectors or lead-in cables, including the loop detectors installed as a part of the closed loop signal system, located on _____ _____.

The City shall be responsible for maintaining the fiber optic cable connecting the City of _____ traffic signal(s) to the ODOT traffic signal(s) at SR ___ and _____. This cable will be installed on SR ___ between _____ _____. Any work on the ODOT span wire shall be coordinated with ODOT. Any work in the ODOT housing shall be performed by ODOT.

The City shall also be responsible for any traffic studies and for any changes to the existing equipment by additions or alterations necessitated by changing traffic conditions.(e.g. changing lane usage, adding lanes, signal heads, or turn phases)

III. ELECTRICAL ENERGY CHARGES

The City shall remain responsible for the cost of all electrical energy charges for the operation of the signal(s) within the corporation limits of the City.

IV. OPERATION

It is understood that the day to day management of the closed loop computerized system will be the responsibility of ODOT.

If after the installation of the closed loop system and coordination of the traffic signal(s), either party determines or believes that modified timing or coordination of the equipment is necessary to improve the flow of traffic at the location, the parties shall consult on the modification felt necessary and, to the extent reasonably possible, shall agree on the modifications to be made and the payment of the costs attendant thereto, if any. If the parties do not agree, ODOT reserves the right to alter the signal timing as it deems necessary to best serve the motoring public.

V. RIGHT OF ENTRY

The City does hereby grant ODOT and its employees and contractors the Right of Entry to operate and maintain the closed loop system equipment and appurtenances located within the corporation limits of the City. Access to the signal housing(s) and equipment shall be continuously provided to ODOT by the City for the purpose of maintaining or troubleshooting the closed loop signal system operation.

VI. REMOVAL

When it is determined by ODOT that said closed loop signal system is no longer essential to the safety, convenience and welfare of the traveling public, or that the maintenance of traffic in general would be better served by the discontinuance of the closed loop system, then all such equipment, material and devices installed, maintained and operated by ODOT shall be removed or abandoned by ODOT at no expense to the City. All salvageable materials and equipment shall be returned to ODOT's signal inventory and the parties shall be relieved of all obligations under this Agreement.

The determination that the closed loop system involving the signal(s) within the City is no longer useful or desirable shall be made by ODOT, in any reasonable manner, including, but not limited to, findings based on a traffic engineering study.

VII. NOTICES

Notices given under the terms of this Agreement shall be deemed sufficiently received if in the case of notice to either party, such notice is mailed by certified or registered United States Mail or is personally delivered to either party's above referenced address.

VIII. GOVERNING LAW

This Agreement and the performance thereof shall be governed and interpreted, where applicable, solely by the laws of the State of Ohio.

IX. SEVERABILITY

If, and to the extent that any court or competent jurisdiction holds any provisions or part thereof of this Agreement to be invalid or unenforceable as a final nonappealable order, such holding shall in no way affect the validity of the remainder of this Agreement.

X. ENTIRE AGREEMENT

This Agreement constitutes the entire agreement between the City and ODOT and supersedes all previous written and oral negotiations, commitments and understandings. Its terms, conditions and covenants shall not be altered or otherwise amended except pursuant to an instrument in writing signed by each of the parties hereto and making specific reference to this Agreement.

XI. CONSIDERATION

Each party to this Agreement recognizes that the rights and benefits received by the respective parties to this Agreement are valuable and substantial; enforcement of this Agreement cannot be challenged for lack of consideration.

This Agreement shall be binding upon and inure to the benefit of the parties, their respective successors and assigns.

XII. TERM

This Agreement shall remain in full force and effect between the parties until the closed loop system is no longer useful or desirable, as determined by ODOT in good faith and based on engineering judgement, at which time ODOT shall notify the City. The closed loop system

shall be removed and this Agreement shall terminate.

The aforegoing is accepted as a basis for proceeding with the improvement herein described.

For the City of _____, Ohio

Witness:_____

_____ _____Date ___
Contractual Officer

For the State of Ohio
Ohio Department of Transportation

Witness:_____

_____ Date _____
District Deputy Director

Form 496-16. Signal Agreement Where an Existing Traffic Control Signal Needs To Be Modified To Add a New Developer's Driveway/Approach

TRAFFIC SIGNAL AGREEMENT

This Agreement, made this _____ day of _____, 200__ by and between the Ohio Department of Transportation whose address is (replace with District's address) (hereinafter referred to as "ODOT"), and __(replace with Company's name)_ whose address is _____ hereinafter referred to as the "Company".

WITNESSETH THAT:

In consideration of the mutual covenants hereinafter contained and for the purpose of modifing and maintaining a traffic signal installation located on State Route ___ and the _____, in _____ County, Ohio; and

WHEREAS: the Company holds title to certain real property abutting and adjacent to the aforementioned location; and

WHEREAS: there is a driveway which will serve as ingress and egress to the Company's real property and subject driveway carries vehicular traffic to and from State Route ___; and

WHEREAS: a need for a traffic signal exists to efficiently control the ingress and egress of traffic at the intersection of State Route ___ and the driveway; and

WHEREAS: there is an existing traffic signal at the intersection of said State Route ___ and the driveway which was installed and is maintained pursuant to a separate Agreement between ODOT and __(Insert name of existing Company)_ whose address is (Insert existing Company's address) (hereinafter referred to as "Third Party Company"; and

WHEREAS: the location and property described above, the proposed signal, and the signal appurtenances are all shown on
the plan hereto attached as an addendum to this Agreement, identified as Exhibit "A", a part by direct reference thereto; and

WHEREAS: the operation and maintenance of the aforesaid traffic signal will necessitate the use of certain State equipment upon the property of the Company; and

WHEREAS: the location of the traffic signal and appurtenances shall be in accordance with Exhibit "A", attached hereto and made a part thereof; and

WHEREAS: the State cannot modify the proposed signal at State expense; and

WHEREAS: the Company wishes to have the existing traffic signal modified.

NOW THEREFORE, IT IS AGREED BY AND BETWEEN THE PARTIES AS FOLLOWS:

I. MODIFICATION OF SIGNAL

The Company shall prepare the necessary plans for the modification of the traffic signal and they shall be in accordance with the standards set forth in the Ohio Manual of Uniform Traffic Control Devices. Said plans shall be reviewed and approved by the Department prior to release to the builder and prior to modification.

The Company agrees that the modification of the traffic signal will conform to Exhibit "A". The Company shall furnish all materials, labor, tools and equipment necessary to modify the traffic signal so it is complete and ready for operation. Such material shall be subject to approval by the Department prior to modification.

If, in the future either party determines or believes that additional or modified equipment or modified timing or coordination of the equipment is necessary to improve the flow of traffic at the location, the parties shall consult on the modification felt necessary and, to the extent reasonably possible, shall agree on the modifications to be made and the payment of the costs attendant thereto, if any. ODOT reserves the right to alter the traffic signal, the roadway or other appurtenances as it deems necessary if the parties do not agree.

II. BONDS AND ASSURANCES

The Company shall obtain or cause to be obtained a performance bond in the amount of _(insert cost of construction/modification of traffic signal) ($ .00), which shall indemnify the State of Ohio and ODOT against all damages suffered by the failure of the company to perform the Agreement according to its provisions and in accordance with the plan contained in Exhibit "A", R.C. 4511.10, and other requirements deemed necessary for the acceptance by ODOT of the completed traffic signal modification.

The performance bond described in the preceding paragraph shall include, in addition to the obligation to faithfully perform this Agreement, the obligation to pay all lawful claims of subcontractors, material men and laborers for labor performed and materials furnished in carrying forward, performing or completing the modification of the traffic signal.

The form of this bond shall be in accordance with R.C. 153.57.

Nothing in this Agreement, including the previous provisions of this section II, shall be construed to release the Company, in whole or in part, from liability to the State of Ohio or ODOT, arising from a failure to perform this contract properly.

III. INDEMNIFICATION

The Company, on behalf of itself, its contractors, subcontractors, workmen or agents agrees to indemnify and hold harmless the State of Ohio, ODOT and their representatives from any liability, cause of action, cost, or expense, including attorney's fees, incurred in connection with or arising from loss or damage to property or injury or death of any person resulting from the modification to the traffic signal under this Agreement.

Therefore, the Company shall procure an insurance policy in the amount necessary to adequately cover damage to persons or property resulting from work on the modification of the traffic signal. The minimum amount of insurance shall be One Million Dollars ($1,000,000.00), but in no event does this relieve the Company of its obligation to indemnify the State of Ohio and ODOT as described above.

In no event shall the Company, its contractors, subcontractors, workmen or agents be considered agents or employees of the State of Ohio or ODOT.

IV. PRO RATA ELECTRICAL ENERGY CHARGES

Company understands and acknowledges that Third Party Company pursuant to its separate Agreement with ODOT, is liable for 100% of the electrical energy charges associated with the operation of the traffic signal. The Company shall, at the sole option of the Third Party Company, reimburse and pay to the Third Party Company a pro rata share of the total electrical energy charges.

V. NORMAL MAINTENANCE

The State shall provide all normal maintenance required at all times, hereafter, for the efficient operation of subject traffic control signal. Normal maintenance guidelines shall incorporate those functions necessary for maintaining the signal operation at all times; i.e., repair and replacement of all malfunctioning signal components or those that may be damaged either by accident or deterioration. These guidelines shall not apply, however, to subject signal wherein changes to the existing equipment by additions or alterations are necessitated by changing traffic conditions. Reimbursement for maintenance as provided by the State shall be made subject to the provisions outlined in Section VI for reimbursement to the State by the Company.

VI. MAINTENANCE FEE

The Company shall pay to the Treasurer of the State of Ohio, c/o Ohio Department of Transportation, (___ %)of the average annual maintenance fee for a traffic signal currently,_____Dollars payable upon receipt of an invoice which will be issued on or about January 1 of each year by the Ohio Department of Transportation, District ____, located in _____ _____, Ohio. Said amount is in return for the maintenance of this signal by the State as described in Section VIII of this Agreement. It is understood by both parties that, biennially, ODOT will review its actual costs associated with the maintenance and operation of the signal and reserves the right to unilaterally revise the annual fee based on such review.

Upon signing of this agreement, the Company shall furnish a check made payable to the Treasurer of the State of Ohio, c/o Ohio Department of Transportation, in the amount to be prorated for the remainder of the calendar year of installation as its contribution to the maintenance of the signal for said part of the calendar year.

Upon failure of the Company to pay its annual maintenance and operation fee, ODOT reserves the right to remove the signal.

VII. RIGHT OF ENTRY

The Company does hereby give the State and its employees the Right of Entry to operate and maintain the traffic signal equipment and appurtenances located on the property of the Company, as described in Exhibit "A" and throughout this Agreement.

The Company agrees that the State and its employees, as of the signing of this Agreement, have the right to enter the property of the Company; this right will be limited to the portion of the Company's property depicted in Exhibit "A" except that the Company may expand the portion of its property subject to this Right of Entry by describing below the additional portion of property made subject, or the Company may limit the Right of Entry to a portion of its property less than that depicted in Exhibit "A" by describing the limitation below and clearly marking the boundaries of the Right of Entry on Exhibit "A". The Company must provide adequate space for maintenance vehicles and activity. (Describe Right of Entry if more or less inclusive than Exhibit "A".) _____

_____

_____.

Said Right of Entry includes the following conditions and terms:

(a) Such Right of Entry is made subject to all other easements, dedications, uses or restrictions whatsoever affecting the real property which is the subject matter thereof, whether of record or otherwise.

(b) The Company reserves to itself, its successors and assigns, the right to use the property which is the subject of this Right of Entry in any manner whatsoever, providing that such usage does not interfere in any way with the special rights herein granted to the State.

(c) The State shall operate and maintain the traffic signal apparatus, and access to the equipment at the location described above shall be continuously provided by the Company for maintenance purposes.

VIII. REMOVAL

When it is determined by the State that said traffic signal or its appurtenances are no longer essential to the safety, convenience and welfare of the traveling public, or any individuals traveling to or from the Company's property, or any individuals traveling near the Company's property, or that the maintenance of traffic in general would be better served by the discontinuance of the traffic signal, then all such equipment, material and devices installed, maintained and operated by the State shall be removed by the State at no expense to the Company. All salvageable materials and equipment shall be returned to the State's signal inventory and the parties shall be relieved of all obligations under this Agreement.

The determination that the traffic signal is no longer useful or desirable shall be made by the State of Ohio, ODOT, in any reasonable manner, including, but not limited to, findings based on a traffic engineering study.

IX. NOTICES

Notices given under the terms of this Agreement shall be deemed sufficiently received if in the case of notice to either party, such notice is mailed by certified or registered United States Mail or is personally delivered to either party's above referenced address.

X. GOVERNING LAW

This Agreement and the performance thereof shall be governed and interpreted, where applicable, solely by the laws of the State of Ohio.

XI. SEVERABILITY

If, and to the extent that any court of competent jurisdiction holds any provisions or part thereof of this Agreement to be invalid or unenforceable as a final nonappealable order, such holding shall in no way affect the validity of the remainder of this Agreement.

XII. ENTIRE AGREEMENT

This Agreement and the attachments hereto, if any, constitute the entire agreement between the Company and ODOT and supersede all previous written and oral negotiations, commitments and understandings. Its terms, conditions and covenants shall not be altered or otherwise amended except pursuant to an instrument in writing signed by each of the parties hereto and making specific reference to this Agreement.

XIII. CONSIDERATION

Each party to this Agreement recognizes that the rights and benefits received by the respective parties to this Agreement are valuable and substantial; enforcement of this Agreement cannot be challenged for lack of consideration.

This Agreement shall be binding upon and inure to the benefit of the parties, their respective successors and assigns.

It is understood by both parties that the Company shall not be relieved of the obligations of this Agreement simply by virtue of the conveyance of the subject real property by the Company. The Company shall be relieved of the obligations herein at the time when ODOT enters into a new agreement for the signal with the transferee of the property or makes the determination that the signal may be removed in accordance with Section VIII of this Agreement.

XIV. TERM

This Agreement shall remain in full force and effect between the parties until the signal installation reaches the end of its useful life because of normal deterioration to its major structural components as determined by ODOT in good faith and based on engineering judgement, at which time ODOT shall notify the Company. The signal shall be removed and this agreement shall terminate. If a signal is still required as determined by ODOT a new agreement shall be negotiated between ODOT and the Company to install and maintain a new replacement signal.

IN WITNESS WHEREOF, the Company, _____, has signed and sealed this Agreement this _____ day of _____, 19__, and the State of Ohio has signed and sealed this Agreement this _____ day of _____, 19__.

STATE OF OHIO

OHIO DEPARTMENT OF TRANSPORTATION

By: _____

District Deputy Director

WITNESS: _____ DATE: _____

COMPANY: _____

BY: _____

PRINT NAME AND TITLE: _____

WITNESS: _____ DATE: _____

Form 496-17. Signal Agreement for the Construction of a New Traffic Control Signal at a Developer's Driveway

AGREEMENT

Standard

This Agreement, made this ____ day of _____, 200_ by and between the Ohio Department of Transportation whose address is (replace with District's address) (hereinafter referred to as "ODOT"), and the _____ and whose address is _____ hereinafter referred to as the "Company".

WITNESSETH THAT:

In consideration of the mutual covenants hereinafter contained and for the purpose of installing and maintaining a traffic signal installation located at _____ _____; and

WHEREAS: a need for a traffic signal exists to efficiently control the ingress and egress of traffic at the intersection of State Route __ and _____; and

WHEREAS: the location and property described above, the proposed signal, and the signal appurtenances are all shown on the plan hereto attached as an addendum to this Agreement, identified as Exhibit "A", a part by direct reference thereto;

and

WHEREAS: the State cannot install the proposed signal at State expense; and

WHEREAS: the Company wishes to have the proposed traffic signal installed; and

WHEREAS: the location of the traffic signal and appurtenances shall be in accordance with Exhibit "A", attached hereto and made a part thereof.

NOW THEREFORE, IT IS AGREED BY AND BETWEEN THE PARTIES AS FOLLOWS:

I. CONSTRUCTION

The Company shall prepare the necessary plans for the proposed traffic signal and they shall be in accordance with the standards set forth in the Ohio Manual of Uniform Traffic Control Devices. Said plans shall be reviewed and approved by ODOT prior to release to the builder and prior to construction.

The Company agrees that the design and installation of the subject signal will conform to the plan included in this Agreement as Exhibit "A".

The Company shall furnish all material, labor, tools and equipment necessary to install the signal so it is complete and ready for operation. Such material shall be subject to approval by ODOT prior to installation. (Or: Such materials shall be in accordance with the ODOT Construction and Material Specifications and Standard Drawings.)

II. BONDS AND ASSURANCES

The Company shall obtain or cause to be obtained a performance bond in the amount of __(insert cost of construction/modification of traffic signal) ($_____), which shall indemnify the State of Ohio and ODOT against all damages suffered by the failure of the Company to perform the Agreement according to its provisions and in accordance with the plan contained in Exhibit "A", Ohio Revised Code (R.C.) §4511.10, and other requirements deemed necessary for the acceptance by the State of Ohio of the completed traffic control device(s).

The performance bond described in Paragraph 1 of Section II of this Agreement, shall include, in addition to the obligation to faithfully perform this Agreement, the obligation to pay all lawful claims of subcontractors, material people and laborers for labor performed and materials furnished in the carrying forward, performing or completion of the construction and erection of the traffic control device(s).

The form of this Bond shall be in accordance with R.C. §153.57.

Nothing in this Agreement, including Paragraphs 1 and 2 of Section II, shall be construed as to release the Company in part or whole, to the State of Ohio and ODOT from any liability, arising from a failure to perform this contract properly.

III. INDEMNIFICATION

The Company, on behalf of itself, its contractors, subcontractors, workers or agents agrees to indemnify and hold harmless the State of Ohio, ODOT and their representatives from any liability, cause of action, cost, or expense, including attorney's fees, incurred in connection with or arising from the acts or omissions of the Company, its contractors, subcontractors, workmen or agents which cause loss or damage to property or injury or death of any person resulting from the construction of the traffic signal under this Agreement.

Therefore, the Company shall procure or cause to be procured an insurance policy in the amount necessary to adequately cover damage to persons or property resulting from work on the construction of the traffic signal. The minimum amount of insurance shall be One Million Dollars ($1,000,000.00), but in no event does this relieve the Company of its obligation to indemnify the State of Ohio and ODOT as described above.

In no event shall the Company, its contractors, subcontractors, workers or agents be considered agents or employees of the State of Ohio or ODOT.

IV. INSPECTIONS

The Company shall permit the State of Ohio, ODOT or its authorized agent to enter upon the site for the purposes of inspection at any reasonable time or times during the time of this Agreement.

V. COMPLETION OF CONSTRUCTION

When the signal construction has been completed and before it is placed in operation, it shall be inspected by ODOT, which will determine whether the signal conforms to plans and Exhibit "A", as well as any relevant statute or regulation.

If the signal is found to be in conformity with all plans, regulations and statutes, the State will accept the signal, at which time the State shall assume ownership and maintenance responsibility for all signal equipment and traffic control devices related to the project governed by this Agreement.

The signal shall operate under the jurisdiction of the State of Ohio, including the phasing and timing as provided by R.C. §4511.10.

VI. MODIFICATION OF SIGNAL

If, after the initial installation or modification and coordination of the traffic signal, either party determines or believes that additional or modified equipment or modified timing or coordination of the equipment is necessary to improve the flow of traffic at the location, the parties shall consult on the modification felt necessary and, to the extent reasonably possible, shall agree on the modifications to be made and the payment of the costs attendant thereto, if any. ODOT reserves the right to alter the traffic signal, the roadway or other appurtenances as it deems necessary if the parties do not agree.

VII. ELECTRICAL ENERGY CHARGES

It is expressly understood that during the term of this Agreement, the Company shall pay for the maintenance and operation of the signal including any and all electrical energy charges directly to the electric utility for the operation of this signal.

VIII. NORMAL MAINTENANCE

The State shall provide all normal maintenance required at all times, hereafter, for the efficient operation of subject traffic control signal. Normal maintenance guidelines shall incorporate those functions necessary for maintaining the signal operation at all times; i.e., repair and replacement of all malfunctioning signal components or those that may be damaged either by accident or deterioration. These guidelines shall not apply, however, to subject signal wherein changes to the existing equipment by additions or alterations are necessitated by changing traffic conditions. Reimbursement for maintenance as provided by the State shall be made subject to the provisions outlined in Section IX for reimbursement to the State by the Company.

IX. MAINTENANCE FEE

The Company shall pay to the Treasurer of the State of Ohio, c/o Ohio Department of Transportation, (___ %)of the average annual maintenance fee for a traffic signal currently,_____Dollars payable upon receipt of an invoice which will be issued on or about January 1 of each year by the Ohio Department of Transportation, District ____, located in _____ _____, Ohio. Said amount is in return for the maintenance of this signal by the State as described in Section VIII of this Agreement. It is understood by both parties that, biennially, ODOT will review its actual costs associated with the maintenance and operation of the signal and reserves the right to unilaterally revise the annual fee based on such review.

Upon completion of the installation, modification and/or coordination required and acceptance of the signal by the State, the Company shall furnish a check made payable to the Treasurer of the State of Ohio, c/o Ohio Department of Transportation, in the amount to be prorated for the remainder of the calendar year of installation as its contribution to the maintenance of the signal for said part of the calendar year.

Upon failure of the Company to pay its annual maintenance and operation fee, ODOT reserves the right to remove the signal.

X. RIGHT OF ENTRY

The Company does hereby give the State and its employees the Right of Entry to operate and maintain the traffic signal equipment and appurtenances located on the property of the Company, as described in Exhibit "A" and throughout this Agreement.

The Company agrees that the State and its employees, as of the signing of this Agreement, have the right to enter the property of the Company; this right will be limited to the portion of the Company's property depicted in Exhibit "A" except that the Company may expand the portion of its property subject to this Right of Entry by describing below the additional portion of property made subject, or the Company may limit the Right of Entry to a portion of its property less than that depicted in Exhibit "A" by describing the limitation below and clearly marking the boundaries of the Right of Entry on Exhibit "A". Company must provide adequate space for maintenance vehicles and activity. (Describe Right of Entry if more or less inclusive than Exhibit "A".) _____

_____

_____.

Said Right of Entry includes the following conditions and terms: (a) Such Right of Entry is made subject to all other easements, dedications, uses or restrictions whatsoever affecting the real property which is the subject matter thereof, whether of record or otherwise.

(b) The Company reserves to itself, its successors and assigns, the right to use the property which is the subject of this Right of Entry in any manner whatsoever, providing that such usage does not interfere in any way with the special rights herein granted to the State.

(c) The State shall operate and maintain the traffic signal apparatus, and access to the equipment at the location described above shall be continuously provided by the Company for maintenance purposes.

XI. REMOVAL

When it is determined by the State that said traffic signal or its appurtenances are no longer essential to the safety, convenience and welfare of the traveling public, or any individuals traveling to or from the Company's property, or any individuals traveling near the Company's property, or that the maintenance of traffic in general would be better served by the discontinuance of the traffic signal, then all such equipment, material and devices installed, maintained and operated by the State shall be removed by the State at no expense to the Company. All salvageable materials and equipment shall be returned to the State's signal inventory and the parties shall be relieved of all obligations under this Agreement.

The determination that the traffic signal is no longer useful or desirable shall be made by the State of Ohio, ODOT, in any reasonable manner, including, but not limited to, findings based on a traffic engineering study.

XII. NOTICES

Notices given under the terms of this Agreement shall be deemed sufficiently received if in the case of notice to either party, such notice is mailed by certified or registered United States Mail or is personally delivered to either party's above referenced address.

XIII. GOVERNING LAW

This Agreement and the performance thereof shall be governed and interpreted, where applicable, solely by the laws of the State of Ohio.

XIV. SEVERABILITY

If, and to the extent that any court of competent jurisdiction holds any provisions or part thereof of this Agreement to be invalid or unenforceable as a final nonappealable order, such holding shall in no way affect the validity of the remainder of this Agreement.

XV. ENTIRE AGREEMENT

This Agreement and the attachments hereto, if any, constitute the entire agreement between the Company and ODOT and supersede all previous written and oral negotiations, commitments and understandings. Its terms, conditions and covenants shall not be altered or otherwise amended except pursuant to an instrument in writing signed by each of the parties hereto and making specific reference to this Agreement.

XVI. CONSIDERATION

Each party to this Agreement recognizes that the rights and benefits received by the respective parties to this Agreement are valuable and substantial; enforcement of this Agreement cannot be challenged for lack of consideration.

This Agreement shall be binding upon and inure to the benefit of the parties, their respective successors and assigns.

REMOVE IF COMPANY DOES NOT OWN PROPERTY:(It is understood by both parties that the Company shall not be relieved of the obligations of this Agreement simply by virtue of the conveyance of the subject real property by the Company.) The Company shall be relieved of the obligations herein at the time when ODOT enters into a new agreement for the signal with the transferee of the property; or makes the determination that the signal may be removed in accordance with Section XI of this Agreement. INSERT IF COMPANY DOES NOT OWN PROPERTY: (or after the termination of the original term of the Company's lease on (date of lease termination), upon the payment to ODOT of the cost of removing the signal heads, controllers and other aspects of the signal serving the Company's parcel.)

XVII. TERM

This Agreement shall remain in full force and effect between the parties until the signal installation reaches the end of its useful life because of normal deterioration to its major structural components as determined by ODOT in good faith and based on engineering judgement, at which time ODOT shall notify the Company. The signal shall be removed and this agreement shall terminate. If a signal is still required as determined by ODOT a new agreement shall be negotiated between ODOT and the Company to install and maintain a new replacement signal.

IN WITNESS WHEREOF, the Company, _____, has signed and sealed this Agreement this _____ day of _____, 20__, and the State of Ohio has signed and sealed this Agreement this _____ day of _____, 20__.

STATE OF OHIO
OHIO DEPARTMENT OF TRANSPORTATION

By: _____
District Deputy Director

WITNESS: _____ DATE: _____

COMPANY: _____

BY: _____

PRINT NAME AND TITLE: _____

WITNESS: _____ DATE: _____

Form 496-18. Signal Agreement for Modification of a Traffic Control Signal Where Everything Will Remain the Same Including the Energy Charges

SIGNAL MODIFICATION AGREEMENT

This Agreement, made this _____ day of _____, 200__ by and between the Ohio Department of Transportation whose address is (replace with District's address) (hereinafter referred to as "ODOT"), and the _____ whose address is _____ hereinafter referred to as the "Company".

WITNESSETH THAT:

In consideration of the mutual covenants hereinafter contained and for the purpose of modifying and maintaining the existing traffic signal located at_____ _____ _____ _____; and

WHEREAS: the company holds title to certain real property abutting and adjacent to the aforementioned location; and

WHEREAS: there is a driveway which will serve as ingress and egress to the Company's real property and subject driveway carries vehicular traffic to and from State Route _____; and

WHEREAS: there is an existing traffic signal at the intersection of said State Route _____ and the driveway which was installed and is maintained pursuant to a separate Agreement between ODOT and _____ _____ whose address is _____ _____ hereinafter referred to as "Third Party Company".

WHEREAS: presently the need exists to modify the existing traffic signal referred to above in order to efficiently control ingress and egress of traffic at the intersection of State Route _____ and the driveway; and

WHEREAS: the location and property described above, the existing traffic signal, and the signal appurtenances are all shown on the plan attached hereto as Exhibit "A" which is incorporated by reference herein; and

WHEREAS: ODOT cannot modify the traffic signal at its expense; and

WHEREAS: the Company wishes to have the traffic signal modified; and

WHEREAS: the operation and maintenance of the traffic signal will necessitate the use of certain ODOT equipment upon the property of the company; and

WHEREAS: the location of the traffic signal and appurtenances shall be in accordance with Exhibit "A".

NOW THEREFORE, IT IS AGREED BY AND BETWEEN THE PARTIES AS FOLLOWS:

I. MODIFICATION

The Company shall prepare the necessary plans for the modification of the traffic signal and they shall be in accordance with the standards set forth in the Ohio Manual of Uniform Traffic Control Devices. Said plans shall be reviewed and approved by the Department prior to release to the builder and prior to modification.

The Company agrees that the modification of the traffic signal will conform to Exhibit "A".

The Company shall furnish all materials, labor, tools and equipment necessary to modify the traffic signal so it is complete and ready for operation. Such material shall be subject to approval by the Department prior to modification.

II. BONDS AND ASSURANCES

The Company shall obtain or cause to be obtained a performance bond in the amount of _(insert cost of construction/modification of traffic signal) ($ _____.00), which shall indemnify the State of Ohio and ODOT against all damages suffered by the failure of the company to perform the Agreement according to its provisions and in accordance with the plan contained in Exhibit "A", R.C. 4511.10, and other requirements deemed necessary for the acceptance by ODOT of the completed traffic signal modification.

The performance bond described in the preceding paragraph shall include, in addition to the obligation to faithfully perform this Agreement, the obligation to pay all lawful claims of subcontractors, material men and laborers for labor performed and materials furnished in carrying forward, performing or completing the modification of the traffic signal.

The form of this bond shall be in accordance with R.C. 153.57.

Nothing in this Agreement, including the previous provisions of this section II, shall be construed to release the Company, in whole or in part, from liability to the State of Ohio or ODOT, arising from a failure to perform this contract properly.

III. INDEMNIFICATION

The Company, on behalf of itself, its contractors, subcontractors, workmen or agents agrees to indemnify and hold harmless the State of Ohio, ODOT and their representatives from any liability, cause of action, cost, or expense, including attorney's fees, incurred in connection with or arising from loss or damage to property or injury or death of any person resulting from the Company, its contractors, subcontractors, workmen or agents acts or omissions relating to the modification to the traffic signal under this Agreement.

Therefore, the Company shall procure an insurance policy in the amount necessary to adequately cover damage to persons or property resulting from work on the modification of the traffic signal. The minimum amount of insurance shall be One Million Dollars ($1,000,000.00), but in no event does this relieve the Company of its obligation to indemnify the State of Ohio and ODOT as described above.

In no event shall the Company, its contractors, subcontractors, workmen or agents be considered agents or employees of the State of Ohio or ODOT.

IV. INSPECTIONS

The Company shall permit ODOT or its authorized agent to enter upon the site for the purpose of inspection at all reasonable times.

V. COMPLETION OF MODIFICATION

When the signal modification has been completed and before it is operated, it shall be inspected by ODOT, which will determine whether the signal conforms to plans and to Exhibit "A", as well as any relevant statute or regulation.

If the traffic signal modification is found to be in conformity with the plans, regulations and statutes, ODOT will accept the signal modification, and shall assume ownership and maintenance responsibility of the signal modification.

The traffic signal modification shall operate under the jurisdiction of ODOT, including phasing and timing as provided by R.C. 4511.10.

VI. MODIFICATION OF SIGNAL

If, after the initial modification of the signal, either party determines or believes that additional or modified equipment or modified timing or coordination of the equipment is necessary to improve the flow of traffic at the location, the parties shall consult on the modification felt necessary and, to the extent reasonably possible, shall agree on the modifications to be made and the payment of the costs attendant thereto, if any. ODOT reserves the right to alter the traffic signal, the roadway or other appurtenances as it deems necessary if the parties do not agree.

VII. PRO RATA ELECTRICAL ENERGY CHARGES

Company understands and acknowledges that Third Party Company pursuant to its separate Agreement with ODOT, is liable for 100% of the electrical energy charges associated with the operation of the traffic signal. The Company shall, at the sole option of the Third Party Company, reimburse and pay to the Third Party Company a pro rata share of the total electrical energy charges.

VIII. NORMAL MAINTENANCE

ODOT shall provide all normal maintenance required at all times, hereafter, for the efficient operation of the traffic signal. Normal maintenance guidelines shall incorporate those functions necessary for maintaining the signal operation at all times; i.e., repair and replacement of all malfunctioning signal components or those that may be damaged either by accident or deterioration. These guidelines shall not apply, however, to the traffic signal wherein changes to the existing equipment by additions or alterations are necessitated by changing conditions. Reimbursement for maintenance as provided by ODOT shall be made subject to the provisions outlined in Section IX for reimbursement to ODOT by the Company.

IX. MAINTENANCE FEE

The Company shall pay to the Treasurer of the State of Ohio, c/o Ohio Department of Transportation, _____ percent (_____%) of the average annual maintenance fee for a traffic signal payable upon receipt of an invoice which will be issued on or about January 1 of each year by ODOT, District _____, located in _____, Ohio. Said amount is in return for the maintenance of the traffic signal by ODOT as described in section VIII of this Agreement. It is understood by both parties that, biennially, ODOT will review its actual costs associated with the maintenance and operation of the traffic signal and reserves the right to unilaterally revise the annual fee based on such review.

Upon completion of the modification and/ coordination required and acceptance of such work by ODOT, the Company shall

furnish a check made payable to the Treasurer of the State of Ohio, c/o Ohio Department of Transportation, in the amount to be prorated for the remainder of the calendar year of installation as its contribution to the maintenance of the traffic signal for said part of the calendar year.

Upon failure of the Company to pay its annual maintenance and operation fee, ODOT reserves the right to restore the traffic signal to its state prior to the modification provided for herein.

X. RIGHT OF ENTRY

The Company gives ODOT and its employees the right to enter upon the Company's property for the purpose of operating and maintaining the traffic signal equipment and appurtenances located on the property of the Company, as described n Exhibit "A" for the time period covered by this Modification Agreement.

The Company agrees that the State and its employees, as of the signing of this Agreement, have the right to enter the property of the Company; this right will be limited to the portion of the Company's property depicted in Exhibit "A".

XI. REMOVAL

When it is determined by ODOT that the traffic signal or its appurtenances or the modifications which are the subject of the Modification Agreement are no longer essential to the safety, convenience and welfare of the traveling public, or any individuals traveling to or from the Company's property, or any individuals traveling near the Company's property, or that the maintenance of traffic in general would be better served by the discontinuance of the traffic signal, then all such equipment, material and devices installed, maintained and operated by ODOT shall be removed by ODOT at no expense to the Company. All salvageable materials and equipment shall be returned to ODOT signal inventory and the parties shall be relieved of all obligations under this Agreement.

XII. NOTICES

Notices given under the terms of this Agreement shall be deemed sufficiently received if in the case of notice to either party, such notice is mailed by certified or registered United States Mail or is personally delivered to either party's above address.

XIII. GOVERNING LAW

This Agreement and the performance thereof shall be governed and interpreted, where applicable, solely by the laws of the State of Ohio.

XIV. SEVERABILITY

If, and to the extent that any court of competent jurisdiction holds any provisions or part thereof of this Agreement to be invalid or unenforceable as a final nonappealable order, such holding shall in no way affect the validity of the remainder of this Agreement.

XV. ENTIRE AGREEMENT

This Agreement and the attachments hereto, if any, constitute the entire agreement between the company and ODOT and supersede all previous written and oral negotiation, commitments and understandings. Its terms, conditions and covenants shall not be altered or otherwise amended except pursuant to an instrument in writing signed by each of the parties hereto and making specific reference to the Agreement.

XVI. CONSIDERATION

Each party to this Agreement recognizes that the rights and benefits received by the respective parties to this Agreement are valuable and substantial; enforcement of this Agreement cannot be challenged for lack of consideration.

This Agreement shall be binding upon and inure to the benefit of the parties, their respective successors and assigns.

It is understood by both parties that the Company shall not be relieved of the obligations of this Agreement simply by virtue of the conveyance of the subject real property by the Company. The Company shall be relieved of the obligations herein at the time when ODOT enters into a new agreement for the signal with the transferee of the property or makes the determination that the signal may be removed in accordance with Section XI of this Agreement.

XVII. TERM

This Agreement shall remain in full force and effect between the parties until the signal installation reaches the end of its useful life because of normal deterioration to its major structural components as determined by ODOT in good faith and based on engineering judgment, at which time ODOT shall notify the Company. The signal shall be removed and this agreement shall terminate. If a signal is still required as determined by ODOT a new agreement shall be negotiated between ODOT and the Company to install and maintain a new replacement signal.

IN WITNESS WHEREOF, the Company, _____, has signed and sealed this Agreement this _____ day of _____, 19__, and the State of Ohio has signed and sealed this Agreement this _____ day of _____, 19__.

STATE OF OHIO
OHIO DEPARTMENT OF TRANSPORTATION

By:_____
District Deputy Director

WITNESS: _____ DATE: _____

COMPANY: _____

BY: _____

PRINT NAME AND TITLE: _____

WITNESS: _____ DATE: _____

497 TABLES INDEX

497-1 Cross Section Area of Conduit, Cable and Wire

Table 497-1 is used as described in ***Section 450-3.4*** to size conduit based on the number and size of the conductors contained in the conduit.

497-2 Cable and Wire Identification

Table 497-2 is referenced in ***Section 450-10.3*** and is a reproduction of **CMS Table 632.05-1**.

497-3 Minimum Sight Distance

Table 497-3 is referenced in ***Section 450-10.4*** and is a reproduction of **Table 4D.1** from **OMUTCD, Section 4D.15**.

497-4 Types of Overhead Signal Supports

Table 497-4 depicts various types of overhead signal supports and is referenced in ***Sections 440-3, 440-4 and 450-6.1***.

497-5 Load Factors for Signal Heads

Table 497-5 presents load factor used in ***Sections 440-3 and 440-4*** in designing overhead signal supports.

Intentionally blank.

Table 497-1. Cross Section Area of Conduit, Cable and Wire

Specification or Material	No. of Conductors AWG	Cross Section Area, Sq. In.
IMSA 19-1 or 20-1	2/C # 14	.10
	3/C # 14	.13
	4/C # 14	.16
	5/C # 14	.19
	7/C # 14	.22
	9/C # 14	.33
	12/C # 14	.41
	15/C # 14	.48
	18/C # 14	.55
	25/C # 14	.82
	2/C # 12	.12
	3/C # 12	.16
	4/C # 12	.19
	5/C # 12	.23
	7/C # 12	.30
	9/C # 12	.40
	12/C # 12	.50
	15/C # 12	.58
	18/C # 12	.74
	25/C # 12	1.00
UL: RHH/RHW/USE	1/C # 14	.053
	1/C # 12	.061
	1/C # 10	.075
	1/C # 8	.107
	1/C # 6	.138
	1/C # 4	.173
	1/C # 2	.229
Belden	2/C # 14	.08
PE Jacket, Shielded	2/C # 14	.11

Conduit Cross Section Area					
Nominal Diameter, in.	**1/2**	**3/4**	**1**	**1 1/4**	**1 1/2**
Inside Diameter, in.	.622	.824	1.049	1.380	1.610
Inside Area, sq. in.	.30	.53	.86	1.50	2.04
Nominal Diameter, in.	**2**	**2 1/2**	**3**	**3 1/2**	**4**
Inside Diameter, in.	2.067	2.469	3.068	3.548	4.026
Inside Area, sq. in.	3.36	4.79	7.39	9.89	12.73

Table 497-2. Cable Wire and Identification

Cable	Tag
Ground Power (2 wire) 1 ⌀ 120 volt	GND AC+ AC- or ACN
Power (3 wire) 1 ⌀ 120/240 volt Neutral wire	AC+1 AC+2 AC- or ACN
Phase A Phase 1 Phase 1 northbound left turn lanes	⌀ A ⌀ 1 ⌀ 1 NBLT
Phase A, pedestrian signal	⌀ A PD
Overlap, phase A + C Overlap, phase 1 + 6	⌀ A + C ⌀ 1 + 6
Detector lead-in, phase A Detector lead-in, phase 1 Detector lead-in, phase 1 northbound left turn lanes	DET A DET 1 DET 1 NBLT
Detector lead-in, phase A (call type) Detector lead-in, phase 1 (call type) northbound thru lanes	DET A CALL DET 1 CALL NB-THRU
Detector harness *	DET A
Interconnect	IC
Preemption, fire	PE FIRE
Preemption, railroad	PE RR

* For the detector harness, the tag shall be placed next to the MS plug at the detector amplifier.

Table 497-3. Minimum Sight Distance

85th-Percentile Speed (km/h)	Minimum Sight Distance (meters)
30	50
40	65
50	85
60	110
70	140
80	165
90	195
100	220

85th-Percentile Speed (mph)	Minimum Sight Distance (feet)
20	175
25	215
30	270
35	325
40	390
45	460
50	540
55	625
60	715

Table 497-4. Types of Overhead Sign Supports

Support Type	Allowable Sign Area, Sq. Ft.	Span or Arm Length, Ft.	Configuration	Notes
TC-81.20 Signal Support Single Arm	(Small signs may be mounted.)	25 to 48	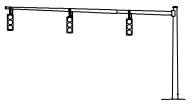	----------
TC-81.20 Combination Signal Support	----------	----------	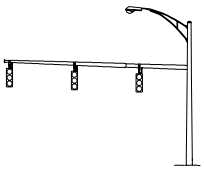	May be used to add a highway lighting and/or signing function to TC-81.20.
TC-81.10 Strain Pole & Messenger Wire Supported Signals	(Small signs may be mounted.)	----------	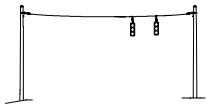	See SCD TC-84.20 for messenger wire details.
TC-81.10 Combination Strain Pole	(Small signs may be mounted.)	----------	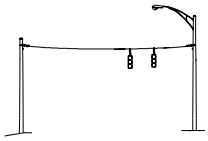	May be used to add a highway lighting and/or signing function to TC-81.10.

Table 497-5. Load Factors for Signal Heads

Signal Head Type (note a)	Aluminum		Polycarbonate (note b)		Optically Programmed		Rigid Attach. (note c)
inches (mm)	8 (203)	12 (305)	8 (203)	12 (305)	8 (203)	12 (305)	
1 section	20 (9.1)	25 (11.3)	15 (6.8)	18 (8.2)	46 (20.9)	50 (22.7)	+19 (+8.6)
3 sections	40 (18.1)	55 (24.9)	25 (11.3)	34 (15.4)	76 (34.5)	88 (40.0)	+25 (+11.3)
4 sections	50 (22.7)	70 (31.8)	30 (13.6)	42 (19.1)	92 (41.8)	107 (48.6)	+28 (+12.7)
5 sections vertical	60 (27.2)	85 (38.6)	35 (15.9)	50 (22.7)	107 (48.6)	126 (57.3)	+31 (+14.1)
5 sections		90 (40.8)		55 (24.9)			
5 sections mixed	75 (34.0)		45 (20.4)				

Intentionally blank.

498 FIGURES INDEX

498-1 Emergency Traffic Signals Guidelines

Figure 498-1 illustrates the cross-corner sight distance criteria suggested for use in reviewing requests for Emergency Traffic Signals, as described in ***Section 406-2***.

498-2 Local Government Agency/Utility Force Account Work

Figure 498-2 illustrates the process described in ***Section 400-4*** for administering force account work by a local government agency or utility to an active construction project.

498-3 Suggested Loop Placement for High-Speed Mainline vs. Large-Volume Side Street

Figure 498-3 illustrates suggested loop detector placements as described in ***Section 408-3*** for the intersection of a high-speed mainline with a large-volume side street.

498-4 Suggested Loop Placement for High-Speed Mainline vs. Ramp/T Intersection

Figure 498-4 illustrates suggested loop detector placements as described in ***Section 408-3*** for the intersection of a high-speed mainline with a ramp or T intersection.

498-5 Suggested Loop Placement for High-Speed Mainline vs. Low-Speed Side Street

Figure 498-5 illustrates suggested loop detector placements as described in ***Section 408-3*** for the intersection of a high-speed mainline with a low-speed side street.

498-6 Concrete Pull Box

Figure 498-6 illustrates a concrete pull box as described in ***Section 450-3.2***.

498-7 Trench Details

Figure 498-7 illustrates details of the different types of trench that are described in ***Section 450-3.3***.

498-8 Exothermic Weld

Figure 498-8 illustrates the equipment used for an exothermic weld as described in ***Section 450-3.6***.

498-9 Power Service

Figure 498-9 illustrates the mounting details for the power service components as described in ***Sections 440-2 and 450-4***.

498-10 Strain Pole Supports

Figure 498-10 illustrates details for signal strain poles as described in ***Section 450-6.1***.

498-11 Strain Pole Attachment Details

Figure 498-11 illustrates details for the attachment of span wires to a signal strain pole as described in ***Sections 450-6.2 and 450-8***.

498-12 Single Arm Support

Figure 498-12 illustrates a mast arm signal support as described in ***Sections 441-2 and 450-6.3***.

498-13 Single Arm Support

Figure 498-13 illustrates sag and vertical clearance and is referenced in ***Section 450-7***.

498-14 Cable Support Assembly

Figure 498-14 illustrates the use of a cable support assembly to relieve cable strain inside of a pole as described in ***Sections 450-8.2 and 450-8.7***.

498-15 Aerial Interconnect Cable

Figure 498-15 illustrates attachment details for aerial interconnect cable as described in ***Section 450-8.8***.

498-16 Method of Measurement for Signal Cable

Figure 498-16 illustrates the calculation method for the measurement of signal cables as described in ***Sections 450-8.5 and 450-9***.

498-17 Method of Measurement for Interconnect Cable

Figure 498-17 illustrates the calculation method for the measurement of interconnect cable as described in ***Sections 450-8.5, 450-8.8 and 450-9***.

498-18 Method of Measurement for Detector Lead-In Cable

Figure 498-18 illustrates the calculation method for the measurement of detector lead-in cables as described in ***Sections 450-8.5, 450-9 and 450-10.8***.

498-19 Method of Measurement for Power Cable

Figure 498-19 illustrates the calculation method for the measurement of power cable as described in ***Sections 450-8.5 and 450-9***.

498-20 Method of Measurement for Service Cable

Figure 498-20 illustrates the calculation method for the measurement of service cable as described in ***Sections 450-8.5 and 450-9***.

498-21 Vehicular Signal Heads

Figure 498-21 illustrates the hardware and wiring for signal heads as described in ***Section 450-10.4***.

498-22 Pedestrian Signal Heads

Figure 498-22 illustrates the mounting of pedestrian signal heads as described in ***Section 450-10.6***.

498-23 Loop Detector Placement and Installation

Figure 498-23 illustrates the installation details for loop detectors as described in ***Section 450-10.7***.

498-24 Loop Detector Slots and Wiring

Figure 498-24 illustrates the installation details for loop detectors as described in ***Section 450-10.7***.

498-25 Loop Detector Wiring

Figure 498-25 illustrates miscellaneous wiring details for loop detector wiring as described in ***Section 450-10.8***.

498-26 Magnetometer Probes and Lead-In

Figure 498-26 illustrates installation details for magnetometer probes as described in ***Section 450-10.9***.

498-27 Ground Rod Testing

Figure 498-27 illustrates the layout of the test probes for the ground rod test as described in ***Section 450-11.2***.

498-28 Short-Circuit Test

Figure 498-28 illustrates the connections for the short-circuit test as described in ***Section 450-11.3***.

498-29 Circuit Continuity Test of Loop Wire (Before Splice to Lead-In Cable)

Figure 498-29 illustrates the connections for the continuity circuit test on loop detector wire as described in ***Section 450-11.4***.

498-30 Circuit Continuity Test of Loop Wire and Lead-In Cable

Figure 498-30 illustrates the connections for the continuity circuit test for the entire loop wire and lead-in cable installation after splicing as described in ***Section 450-11.4***.

498-31 Circuit Continuity Test of Signal Cable Disconnected from Heads or Other Cable

Figure 498-31 illustrates the connections for the continuity circuit test for signal cable disconnected from the signal heads and other cables as described in ***Section 450-11.4***.

498-32 Circuit Continuity Test of Signal Cable (With Cable Connected to the Signal Heads and Lamps Installed)

Figure 498-32 illustrates the connections for the continuity circuit test for signal cable connected to the signal heads (with lamps installed) as described in ***Section 450-11.4***.

498-33 Cable Insulation Test (Loop Detector Wire)

Figure 498-33 illustrates the connections for the cable insulation test for loop detector wire as described in ***Section 450-11.5***.

498-34 Cable Insulation Test (Signal Cable)

Figure 498-34 illustrates the connections for the cable insulation test for signal cable as described in ***Section 450-11.5***.

498-35 SCD TC-81.20 Signal Support Design Chart

Figure 498-35 presents the of the **SCD TC-81.20** signal support design chart for mast arms as described in ***Section 440-3***.

498-36 Plan Details for Strain Poles

Figure 498-36 presents a sample angle orientation chart for signal strain pole **(SCD TC-81.10)** appurtenances as described in ***Section 441-7***.

498-37 Plan Details for Signal Supports - Arm Lengths

Figure 498-37 presents a sample chart for mast arm signal supports **(SCD TC-81.20)** appurtenances as described in ***Section 441-7***.

498-38 Plan Details for Signal Supports - Mast Arm Orientation

Figure 498-38 presents a sample angle orientation chart for mast arm signal support **(SCD TC-81.20)** appurtenances as described in ***Section 441-7***.

Figure 498-1. Emergency Traffic Signal Guidelines

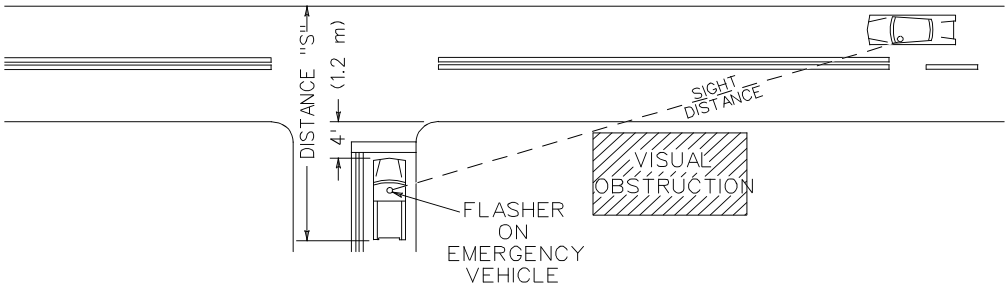

Minimum Cross Corner Sight Distance				
Approach Speed (MPH)	Distance "S"			
	40' (12.2m)	60' (19.8m)	80' (24.4m)	100' (30.5m)
25	230	260	290	320
30	280	315	345	380
35	330	370	410	450
40	370	420	460	500
45	420	470	520	570
50	460	520	580	640
55	510	570	640	700
60	560	630	700	760

Figure 498-2. Local Government Agency/Utility Force Account Work

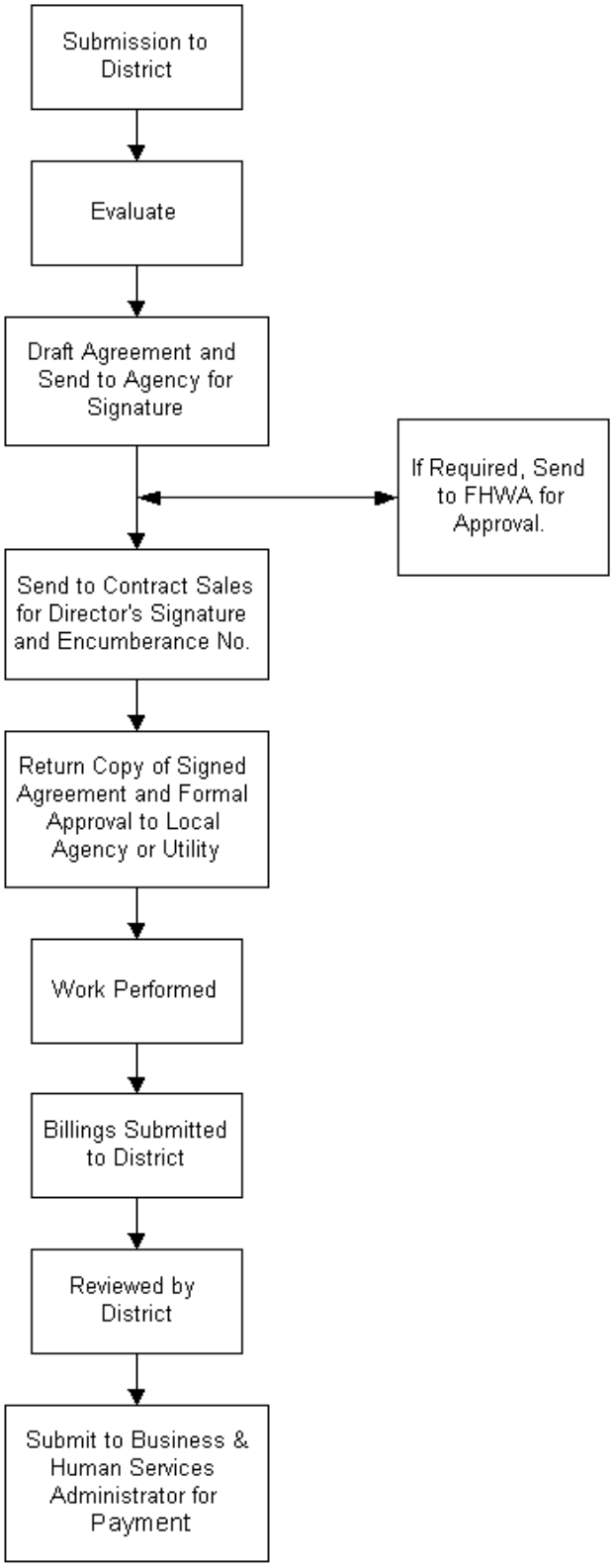

Figure 498-3. Suggested Loop Placement for High-Speed Mainline vs. Large-Volume Side Street

LOOP DETECTOR CHART

LOOP	SIZE FT (m)	Ø	AMP NO.	DELAY (SEC)	MODE	REMARKS
L-1	6x6 (1.8X1.8)		1		pulse	
L-2	6x6 (1.8X1.8)		1		pulse	
L-3	6x6 (1.8X1.8)		2		pulse	
L-4	6x6 (1.8X1.8)		2		pulse	
L-5	6x6 (1.8X1.8)		3		pulse	
L-6	6x6 (1.8X1.8)		3		pulse	
L-7	6x6 (1.8X1.8)		4		pulse	
L-8	6x6 (1.8X1.8)		4		pulse	
L-9	20X8 (6.1X2.4)		5	3	presence	delay inhib. during green phase
L-10	20X8 (6.1X2.4)		6		presence	
L-11	20X8 (6.1X2.4)		7	10	presence	delay inhib. during green phase
L-12	variable		7			
L-13	20X8 (6.1X2.4)		8	3	presence	delay inhib. during green phase
L-14	6x6 (1.8X1.8)		9		pulse	
L-15	6x6 (1.8X1.8)		10		pulse	
L-16	20X8 (6.1X2.4)		11	3	presence	delay inhib. during green phase
L-17	20X8 (6.1X2.4)		12	10	presence	delay inhib. during green phase
L-18	20X8 (6.1X2.4)		13	3	presence	delay inhib. during green phase

X FT (m)	SPEED (MPH)
450 (135)	60
400 (120)	55
350 (105)	50
300 (90)	45
250 (75)	40

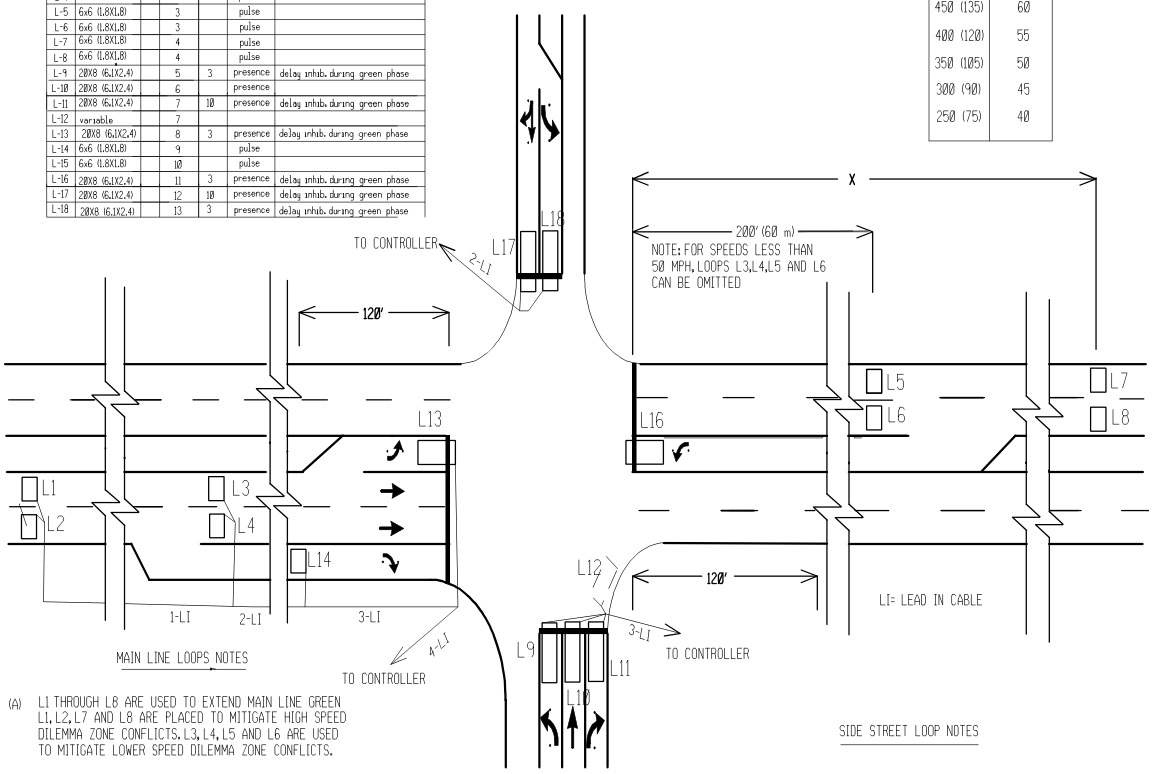

MAIN LINE LOOPS NOTES

(A) L1 THROUGH L8 ARE USED TO EXTEND MAIN LINE GREEN L1, L2, L7 AND L8 ARE PLACED TO MITIGATE HIGH SPEED DILEMMA ZONE CONFLICTS. L3, L4, L5 AND L6 ARE USED TO MITIGATE LOWER SPEED DILEMMA ZONE CONFLICTS.

(B) FOR PERMITTED PHASING, L13 AND L16 CAN BE USED TO EXTEND MAIN LINE GREEN. DESIGNER SHOULD LOOK AT TURN VOLUMES, CAPACITY ANALYSIS AND TRAFFIC PATTERNS TO DETERMINE IF IT IS DESIRABLE TO EXTEND MAIN LINE GREEN WITH LEFT TURN TRAFFIC. IF IT IS NOT DESIRABLE, L13 ANDL16 CAN BE OMITTED.

(C) FOR PROTECTED TURN PHASING, L13 AND L16 ARE USED TO CALL AND EXTEND PROTECTED (TURN ARROW) PHASES. NOTE: IT IS POSSIBLE TO SWITCH DETECTOR OUTPUTS (DETECTOR SWITCHING) IN ORDER TO USE L13 AND L16 TO EXTEND THE MAIN LINE GREEN PHASE (PERMITTED) AFTER THE PROTECTED TURN PHASE HAS TERMINATED.

(D) L13 AND L16 CAN BE PLACED 30' TO 50' (9 TO 15 m) BEHIND STOP LINE IF PROTECTED/PERMITTED PHASING IS USED (3RD VEHICLE DETECTION).

SIDE STREET LOOP NOTES

(A) L9, L10, L11, L17 AND L18 ARE USED TO CALL AND EXTEND THE SIDE STREET GREEN PHASES.

(B) L9 AND L18 CAN BE USED TO CALL AND EXTEND BOTH THE PROTECTED AND PERMITTED PHASES AS DESCRIBED IN (B) AND (C) UNDER MAIN LINE LOOP NOTES.

Figure 498-4. Suggested Loop Placement for Mainline vs. Ramp/T Intersection

LOOP DETECTOR CHART

LOOP	SIZE FT (m)	Ø	AMP NO.	DELAY (SEC)	MODE	REMARKS
L-1	6x6 (1.8 X 1.8)		1		pulse	
L-2	6x6 (1.8 X 1.8)		1		pulse	
L-3	6x6 (1.8 X 1.8)		2		pulse	
L-4	6x6 (1.8 X 1.8)		2		pulse	
L-5	6x6 (1.8 X 1.8)		3		pulse	
L-6	6x6 (1.8 X 1.8)		3		pulse	
L-7	6x6 (1.8 X 1.8)		4		pulse	
L-8	6x6 (1.8 X 1.8)		4		pulse	
L-9	20x8 (6.1 X 2.4)		5	3	presence	NOT delay inhibitted
L-10	20x8 (6.1 X 2.4)		6	10	presence	NOT delay inhibitted
L-11	20x8 (6.1 X 2.4)		7	3	presence	delay inhib. during green phase
L-12	20x8 (6.1 X 2.4)		8	3	presence	delay inhib. during green phase

X FT (m)	SPEED (MPH)
450 (135)	60
400 (120)	55
350 (105)	50
300 (90)	45
250 (75)	40

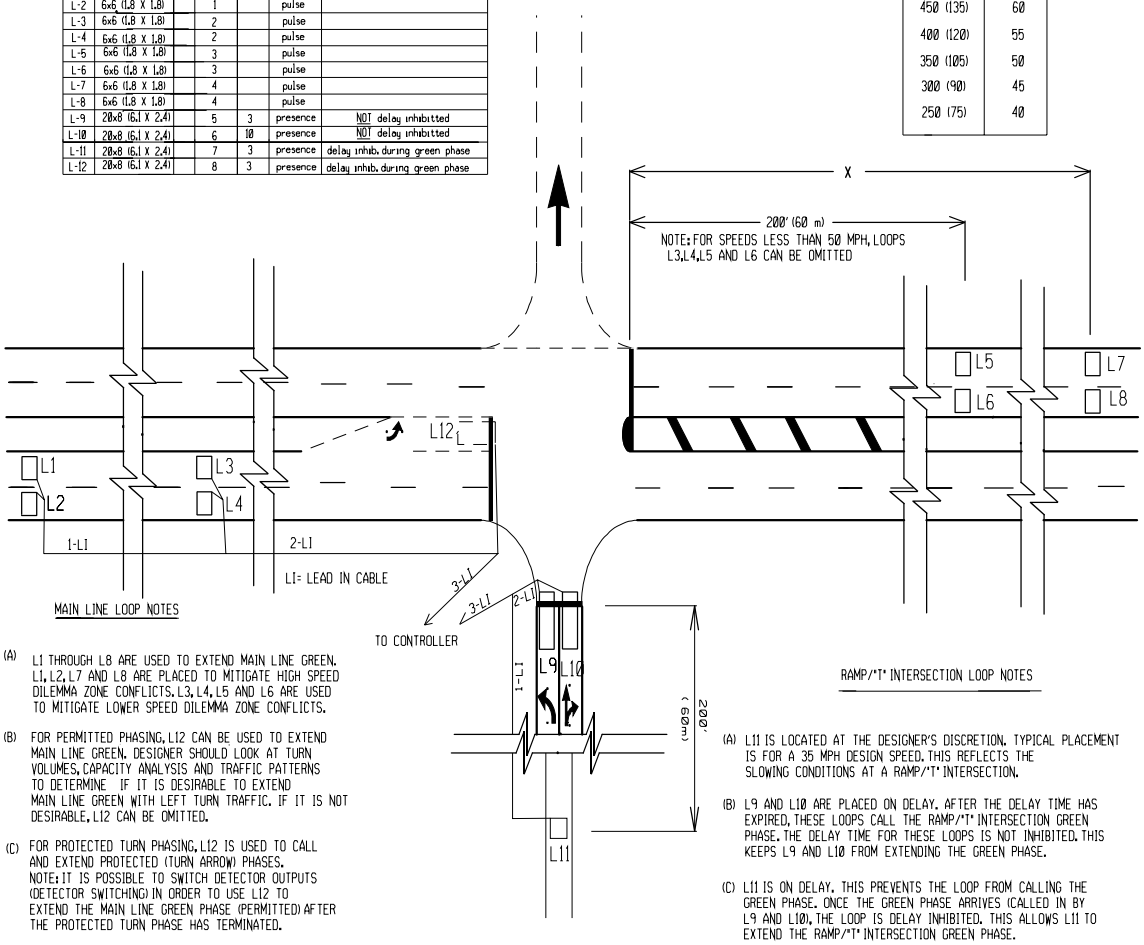

MAIN LINE LOOP NOTES

(A) L1 THROUGH L8 ARE USED TO EXTEND MAIN LINE GREEN. L1, L2, L7 AND L8 ARE PLACED TO MITIGATE HIGH SPEED DILEMMA ZONE CONFLICTS. L3, L4, L5 AND L6 ARE USED TO MITIGATE LOWER SPEED DILEMMA ZONE CONFLICTS.

(B) FOR PERMITTED PHASING, L12 CAN BE USED TO EXTEND MAIN LINE GREEN. DESIGNER SHOULD LOOK AT TURN VOLUMES, CAPACITY ANALYSIS AND TRAFFIC PATTERNS TO DETERMINE IF IT IS DESIRABLE TO EXTEND MAIN LINE GREEN WITH LEFT TURN TRAFFIC. IF IT IS NOT DESIRABLE, L12 CAN BE OMITTED.

(C) FOR PROTECTED TURN PHASING, L12 IS USED TO CALL AND EXTEND PROTECTED (TURN ARROW) PHASES. NOTE: IT IS POSSIBLE TO SWITCH DETECTOR OUTPUTS (DETECTOR SWITCHING) IN ORDER TO USE L12 TO EXTEND THE MAIN LINE GREEN PHASE (PERMITTED) AFTER THE PROTECTED TURN PHASE HAS TERMINATED.

(D) L12 CAN BE PLACED 30' TO 50' (9 TO 15 m) BEHIND THE STOP LINE IF PROTECTED/PERMITTED PHASING IS USED (3RD VEHICLE DETECTION).

RAMP/"T" INTERSECTION LOOP NOTES

(A) L11 IS LOCATED AT THE DESIGNER'S DISCRETION. TYPICAL PLACEMENT IS FOR A 35 MPH DESIGN SPEED. THIS REFLECTS THE SLOWING CONDITIONS AT A RAMP/"T" INTERSECTION.

(B) L9 AND L10 ARE PLACED ON DELAY. AFTER THE DELAY TIME HAS EXPIRED, THESE LOOPS CALL THE RAMP/"T" INTERSECTION GREEN PHASE. THE DELAY TIME FOR THESE LOOPS IS NOT INHIBITED. THIS KEEPS L9 AND L10 FROM EXTENDING THE GREEN PHASE.

(C) L11 IS ON DELAY. THIS PREVENTS THE LOOP FROM CALLING THE GREEN PHASE. ONCE THE GREEN PHASE ARRIVES (CALLED IN BY L9 AND L10), THE LOOP IS DELAY INHIBITED. THIS ALLOWS L11 TO EXTEND THE RAMP/"T" INTERSECTION GREEN PHASE.

Figure 498-5. Suggested Loop Placement for High-Speed Mainline vs. Low-Speed Side Street

LOOP DETECTOR CHART

LOOP	SIZE FT(m)	Ø	AMP NO.	DELAY (SEC)	MODE	REMARKS
L-1	6x6 (1.8X1.8)		1		pulse	
L-2	6x6 (1.8X1.8)		1		pulse	
L-3	6x6 (1.8X1.8)		2		pulse	
L-4	6x6 (1.8X1.8)		2		pulse	
L-5	6x6 (1.8X1.8)		3		pulse	
L-6	6x6 (1.8X1.8)		3		pulse	
L-7	6x6 (1.8X1.8)		4		pulse	
L-8	6x6 (1.8X1.8)		4		pulse	
L-9	20x8 (6.1X2.4)		5	10(*1)	presence	delay inhib. during green phase
L-10	20x8 (6.1X2.4)		6	3(*2)	presence	delay inhib. during green phase
L-11	20x8 (6.1X2.4)		7	3(*2)	presence	delay inhib. during green phase
L-12	20x8 (6.1X2.4)		8	10(*1)	presence	delay inhib. during green phase
L-13	20x8 (6.1X2.4)		9	3(*2)	presence	delay inhib. during green phase
L-14	20x8 (6.1X2.4)		10	3(*2)	presence	delay inhib. during green phase

*1 Large delay used to give vehicles a chance to turn right on red

*2 Small delay used to keep left turning vehicles from other street crossing/clipping Loop and putting in errant calls

X FT(m)	SPEED (MPH)
450 (135)	60
400 (120)	55
350 (105)	50
300 (90)	45
250 (75)	40

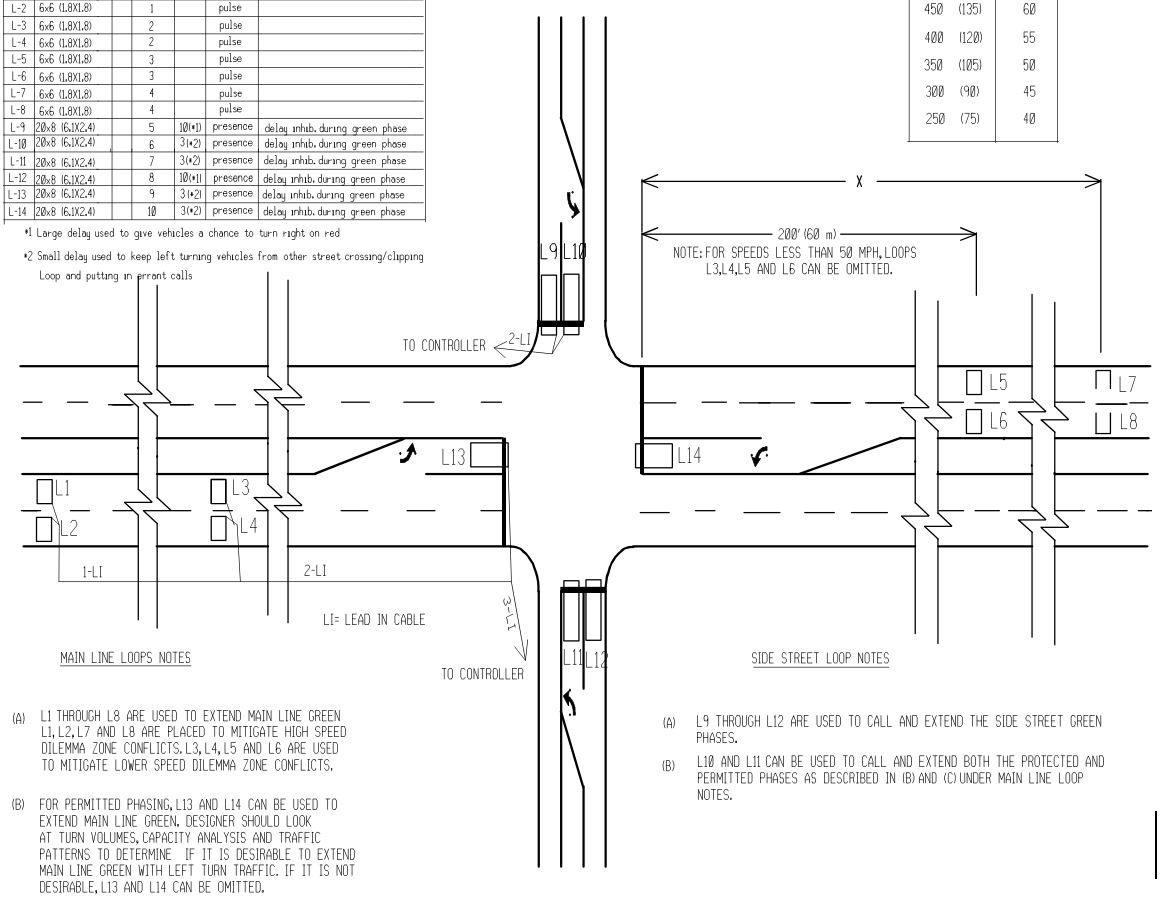

MAIN LINE LOOPS NOTES

(A) L1 THROUGH L8 ARE USED TO EXTEND MAIN LINE GREEN L1, L2, L7 AND L8 ARE PLACED TO MITIGATE HIGH SPEED DILEMMA ZONE CONFLICTS. L3, L4, L5 AND L6 ARE USED TO MITIGATE LOWER SPEED DILEMMA ZONE CONFLICTS.

(B) FOR PERMITTED PHASING, L13 AND L14 CAN BE USED TO EXTEND MAIN LINE GREEN. DESIGNER SHOULD LOOK AT TURN VOLUMES, CAPACITY ANALYSIS AND TRAFFIC PATTERNS TO DETERMINE IF IT IS DESIRABLE TO EXTEND MAIN LINE GREEN WITH LEFT TURN TRAFFIC. IF IT IS NOT DESIRABLE, L13 AND L14 CAN BE OMITTED.

(C) FOR PROTECTED TURN PHASING, L13 AND L14 ARE USED TO CALL AND EXTEND PROTECTED (TURN ARROW) PHASES. NOTE: IT IS POSSIBLE TO SWITCH DETECTOR OUTPUTS (DETECTOR SWITCHING) IN ORDER TO USE L13 AND L14 TO EXTEND THE MAIN LINE GREEN PHASE (PERMITTED) AFTER THE PROTECTED TURN PHASE HAS TERMINATED.

(D) L13 AND L14 CAN BE PLACED 30'TO 50' (9 TO 15 m) BEHIND STOP LINE IF PROTECTED/PERMITTED PHASING IS USED (3RD VEHICLE DETECTION).

SIDE STREET LOOP NOTES

(A) L9 THROUGH L12 ARE USED TO CALL AND EXTEND THE SIDE STREET GREEN PHASES.

(B) L10 AND L11 CAN BE USED TO CALL AND EXTEND BOTH THE PROTECTED AND PERMITTED PHASES AS DESCRIBED IN (B) AND (C) UNDER MAIN LINE LOOP NOTES.

Figure 498-6. Concrete Pull Box

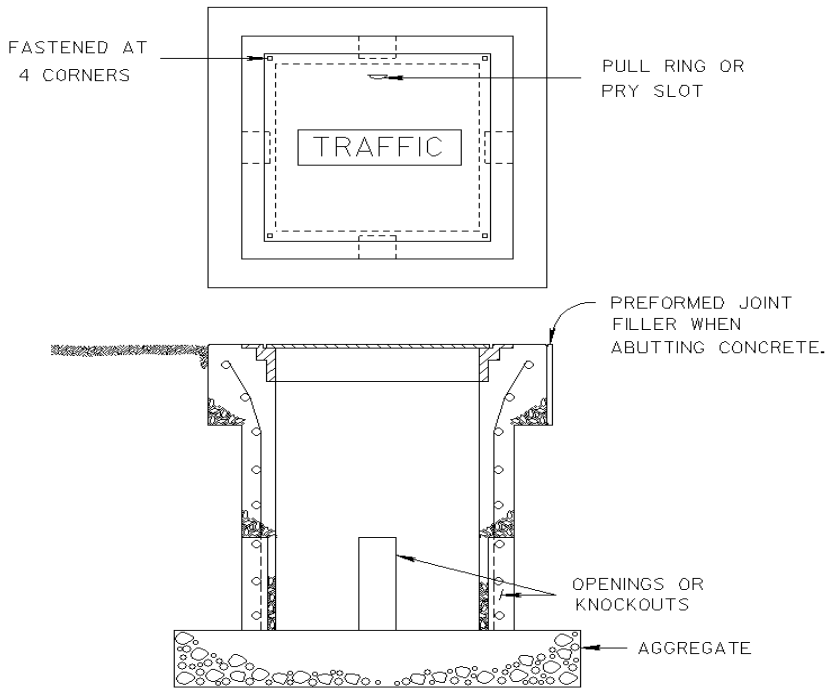

Figure 498-7. Trench Details

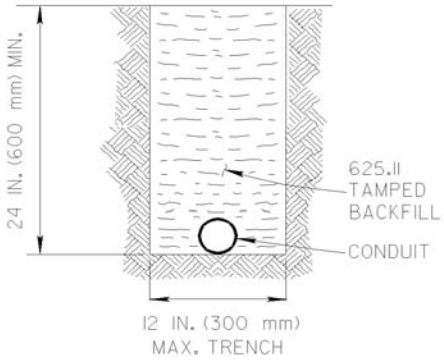

TRENCH

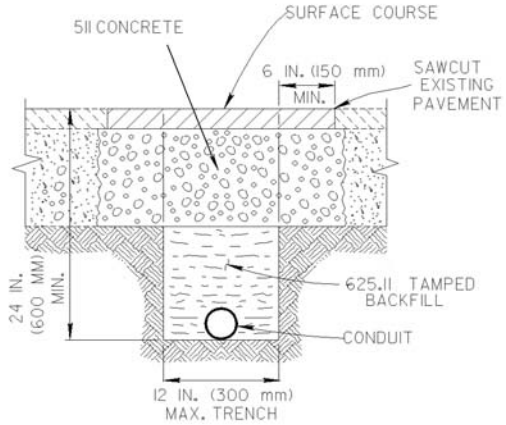

TRENCH IN PAVED AREAS

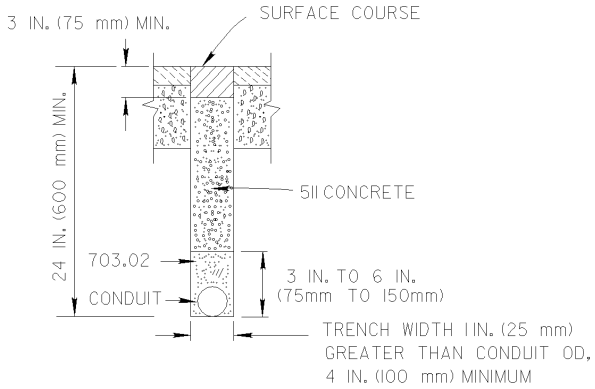

NARROW SLIT TYPE TRENCH

Figure 498-8. Exothermic Weld

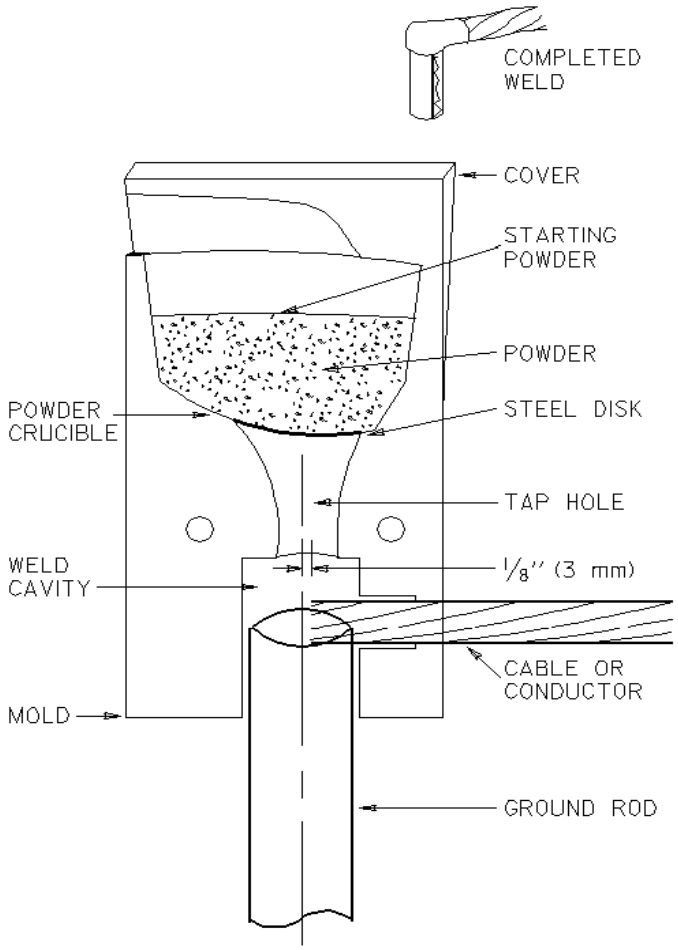

Figure 498-9. Power Service

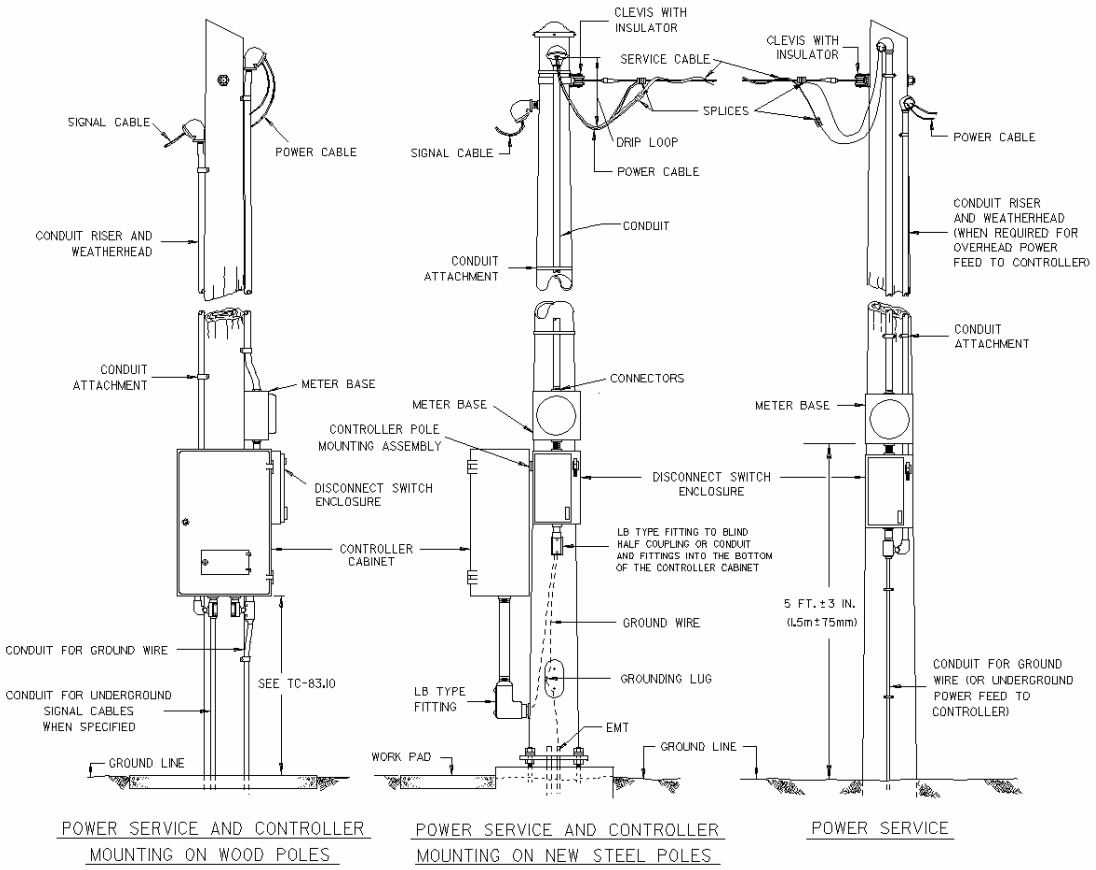

Figure 498-10. Strain Pole Supports

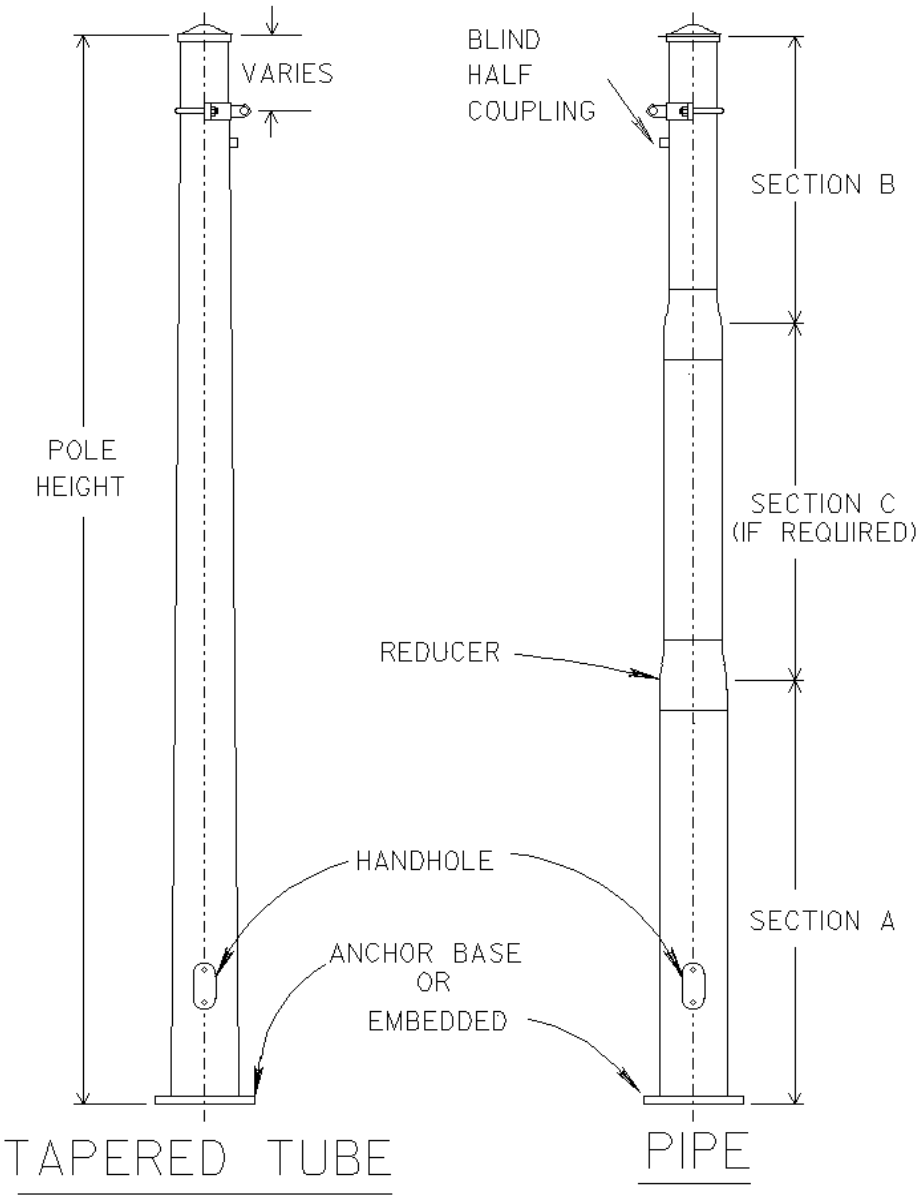

Figure 498-11. Strain Pole Attachment Details

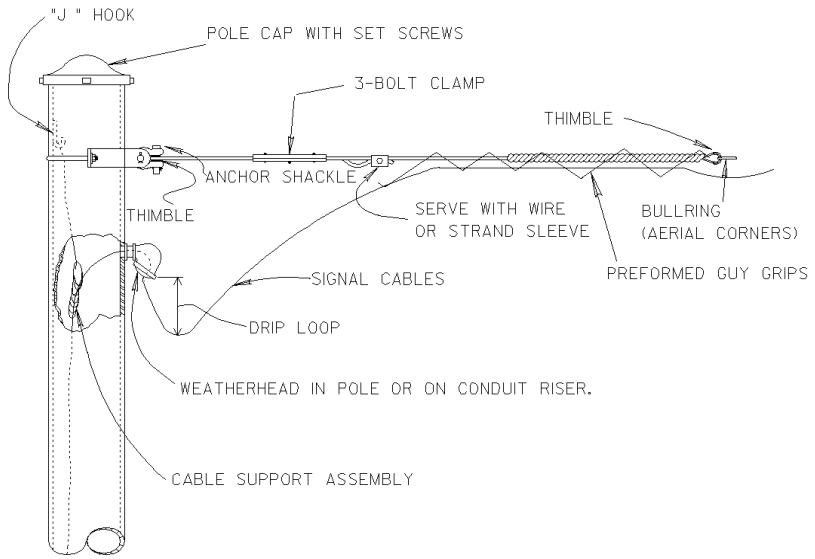

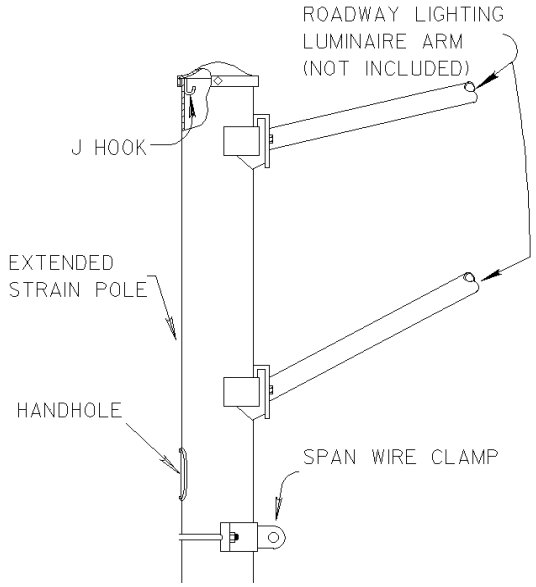

COMBINATION POLE

Figure 498-12. Single Arm Support

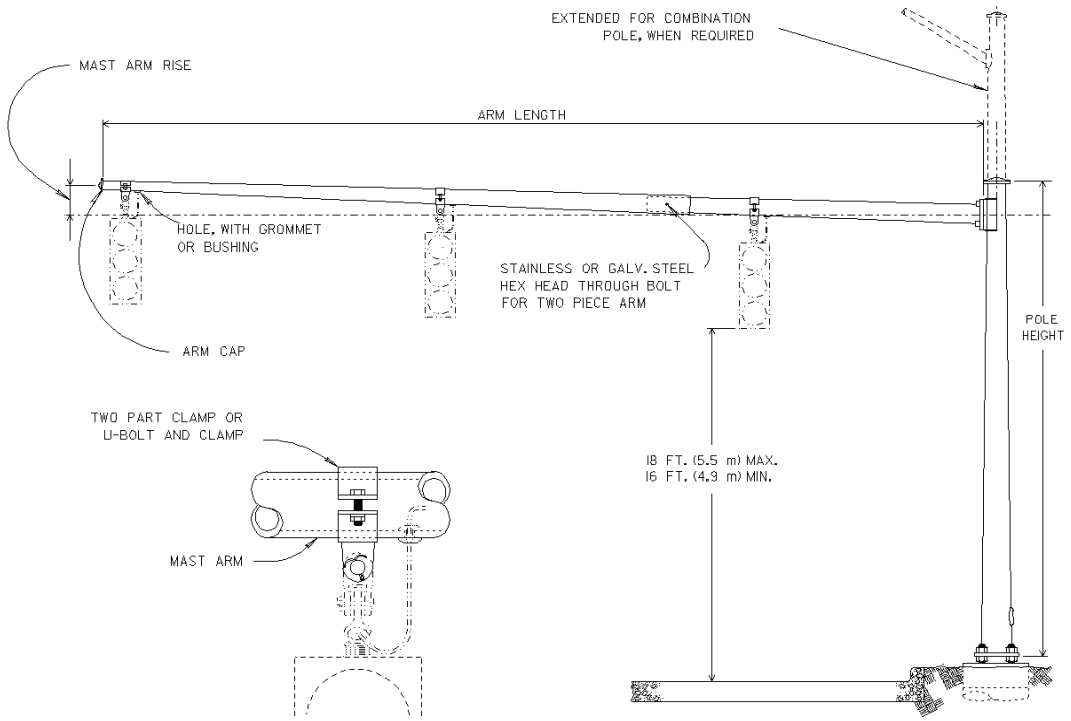

Figure 498-13. Sag and Vertical Clearance Diagram

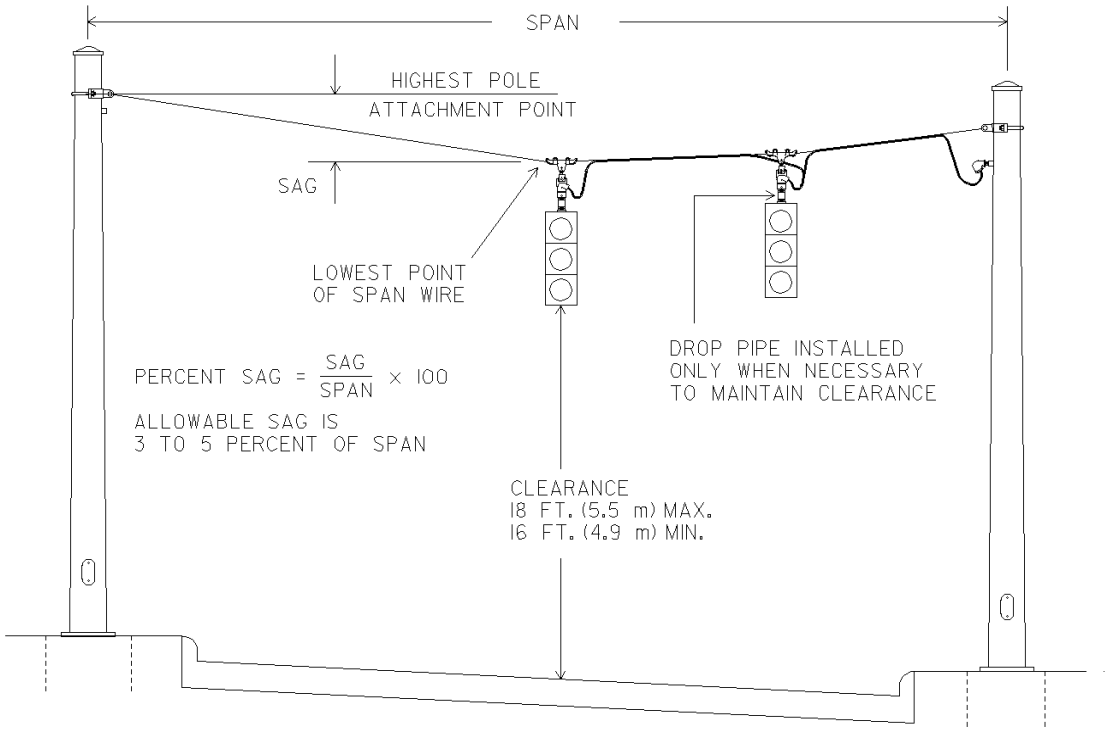

Figure 498-14. Cable Support Assembly

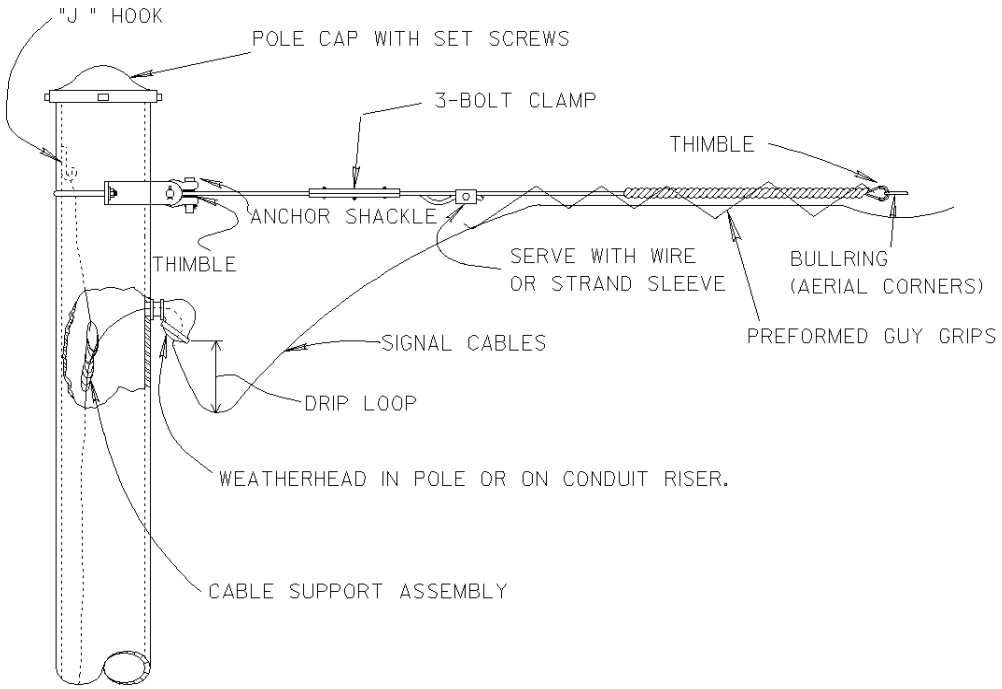

Figure 498-15. Aerial Interconnect Cable

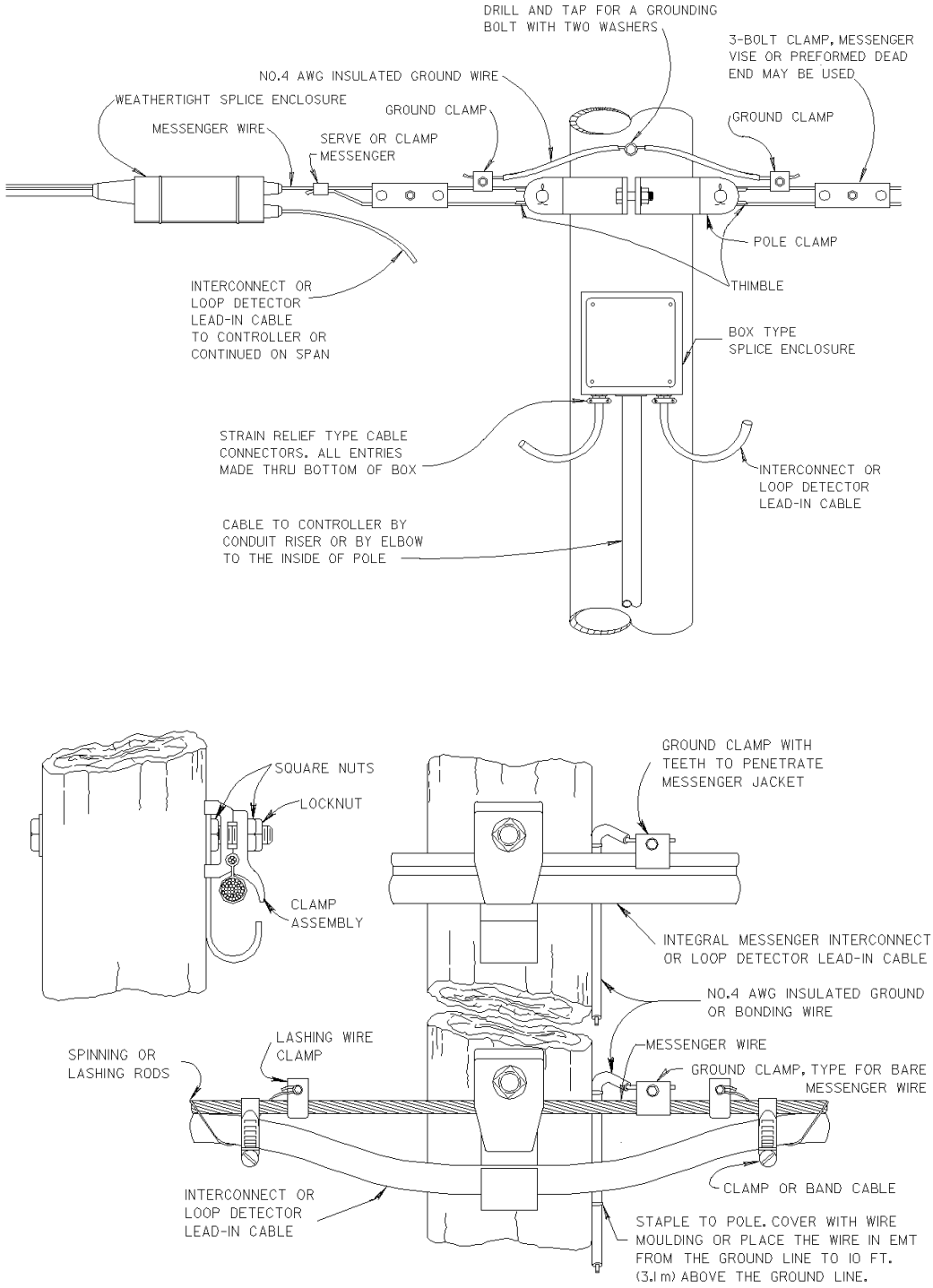

Figure 498-16. Method of Measurement for Signal Cable

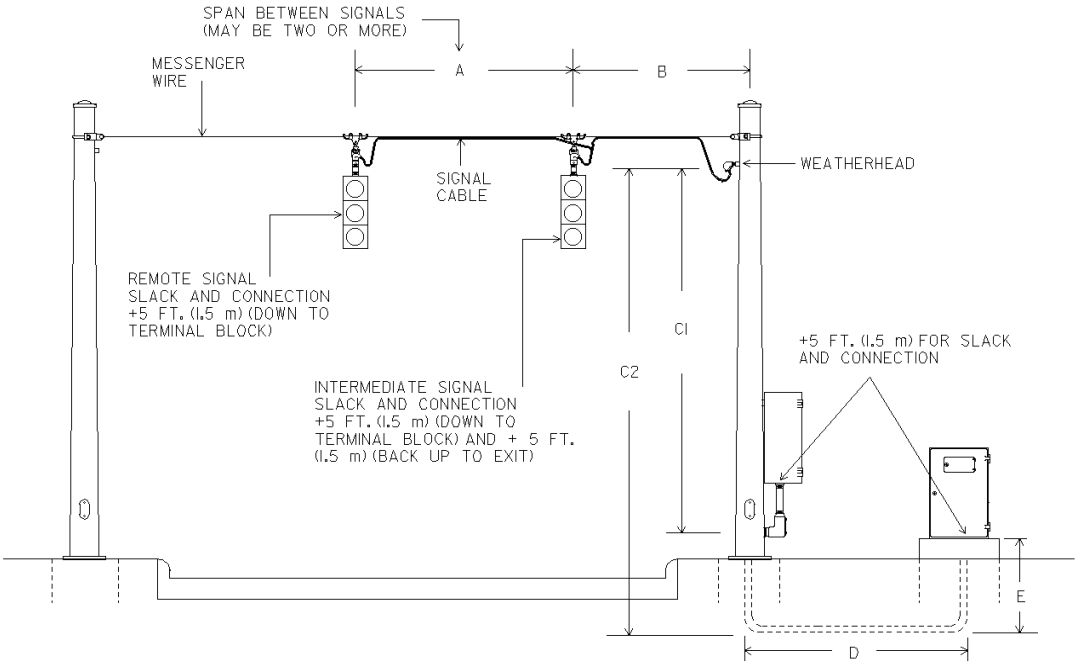

CALCULATION FOR POLE MOUNTED CABINET:

LENGTH = 5 FT. (1.5 m) + A + 10 FT. (3 m) + B + C1 + 5 FT. (1.5 m)

CALCULATION FOR GROUND MOUNTED CABINET:

LENGTH = 5 FT. (1.5 m) + A + 10 FT. (3 m) + B + C2 + D + E + 5 FT. (1.5 m)

Figure 498-17. Method of Measurement for Interconnect Cable

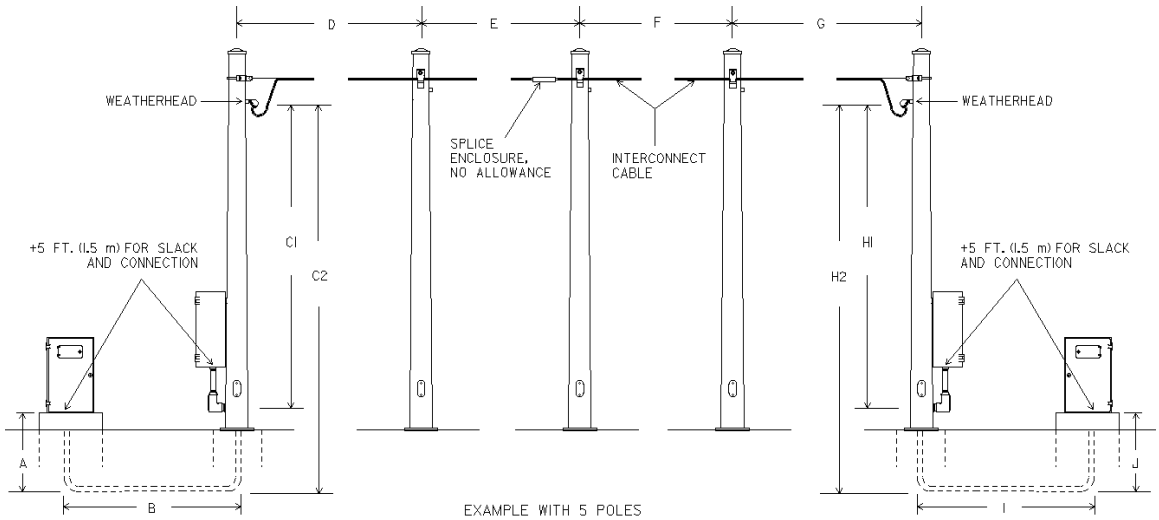

CALCULATION FOR POLE MOUNTED CABINET:

LENGTH = 5 FT. (1.5 m) + C1 + D + E + F + G + H1 + 5 FT. (1.5 m)

CALCULATION FOR GROUND MOUNTED CABINET:

LENGTH = 5 FT. (1.5 m) + A + B + C2 + D + E + F + G + H2 + I + J + 5 FT. (1.5 m)

Figure 498-18. Method of Measurement for Detector Lead-In Cable

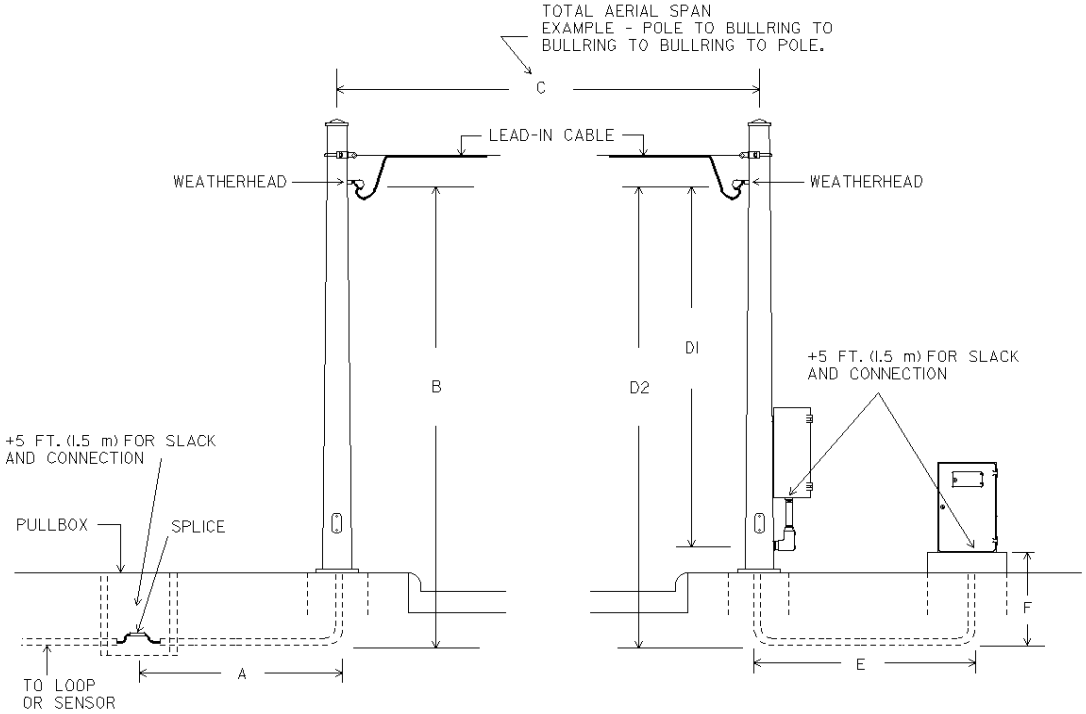

CALCULATION FOR POLE MOUNTED CABINET:

LENGTH = 5 FT. (1.5 m) + A + B + C + DI + 5 FT. (1.5 m)

CALCULATION FOR GROUND MOUNTED CABINET:

LENGTH = 5 FT. (1.5 m) + A + B + C + D2 + E + F + 5 FT. (1.5 m)

Figure 498-19. Method of Measurement for Power Cable

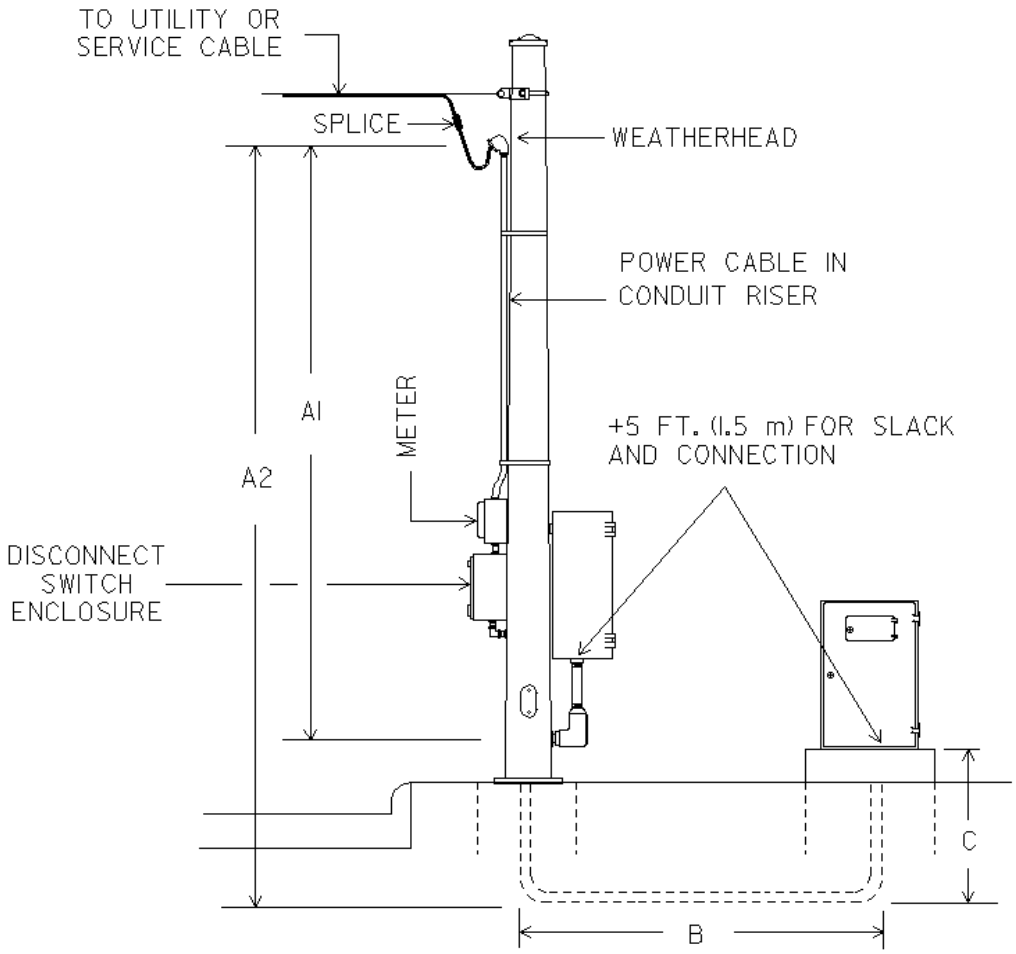

CALCULATION FOR POLE MOUNTED CABINET:

LENGTH = 5 FT. (1.5 m) + A1 + 5 FT. (1.5 m)

CALCULATION FOR GROUND MOUNTED CABINET:

LENGTH = 5 FT. (1.5 m) + A2 + B + C + 5 FT. (1.5 m)

Figure 498-20. Method of Measurement for Service Cable

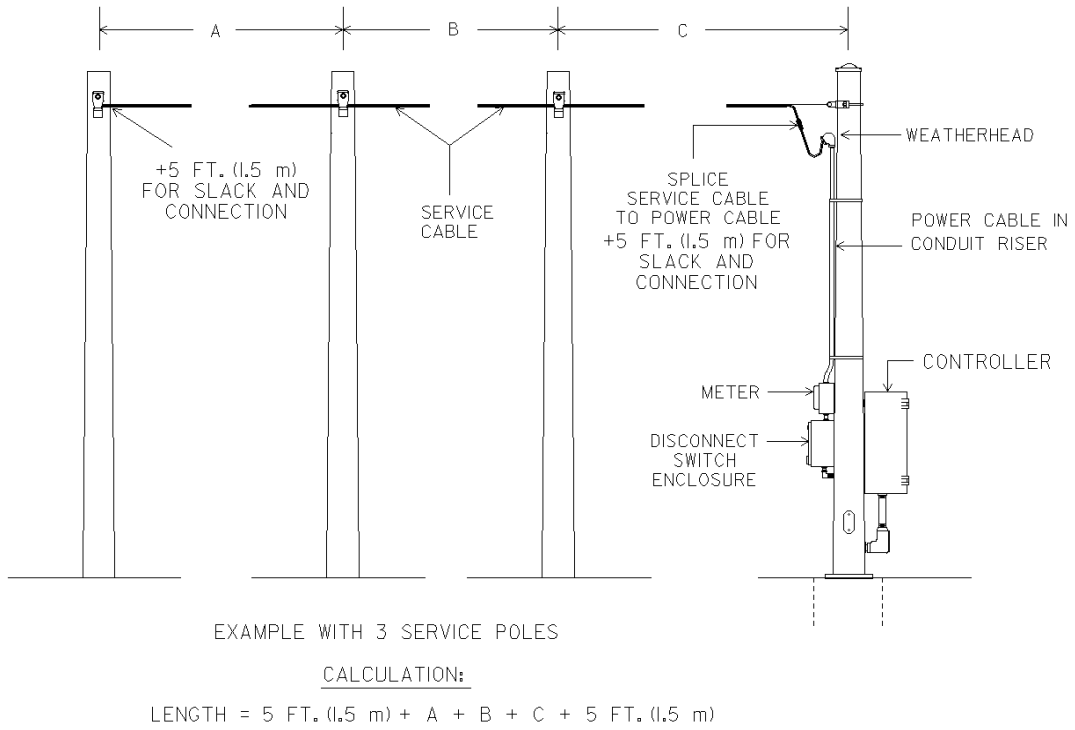

Figure 498-21. Vehicular Signal Heads

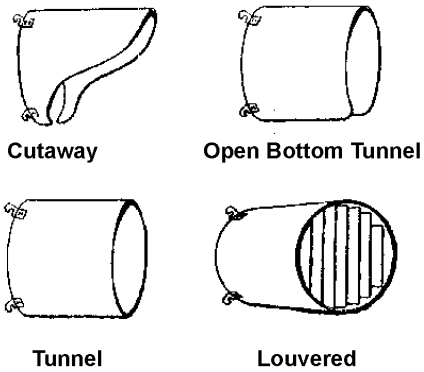

Visors for Signal Heads

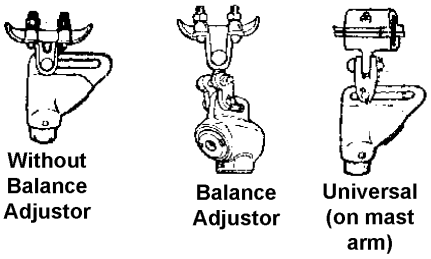

Hangers for Signal Heads

Wiring a Signal Head

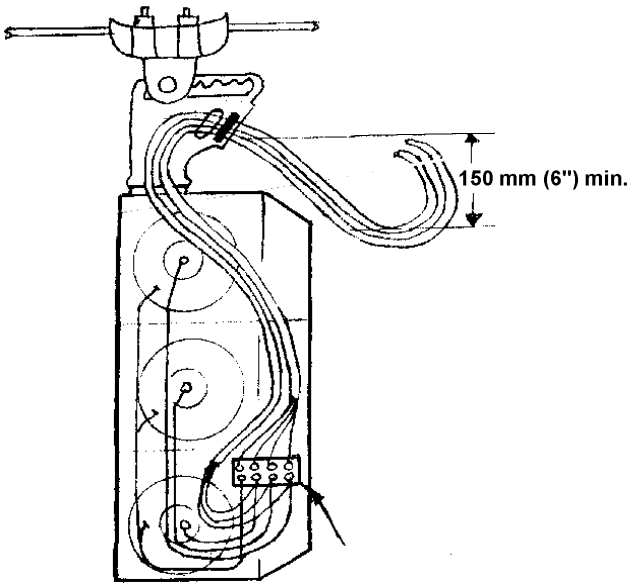

Figure 498-22. Pedestrian Signal Heads

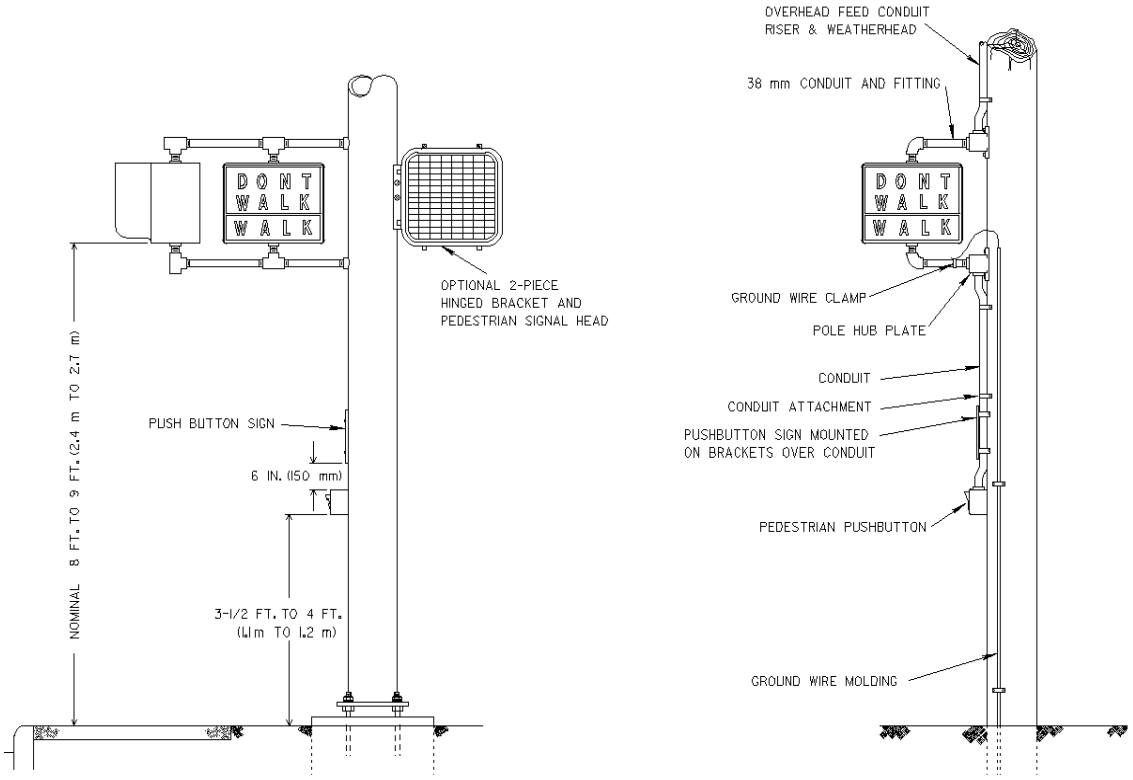

Figure 498-23. Loop Detector Placement and Installation

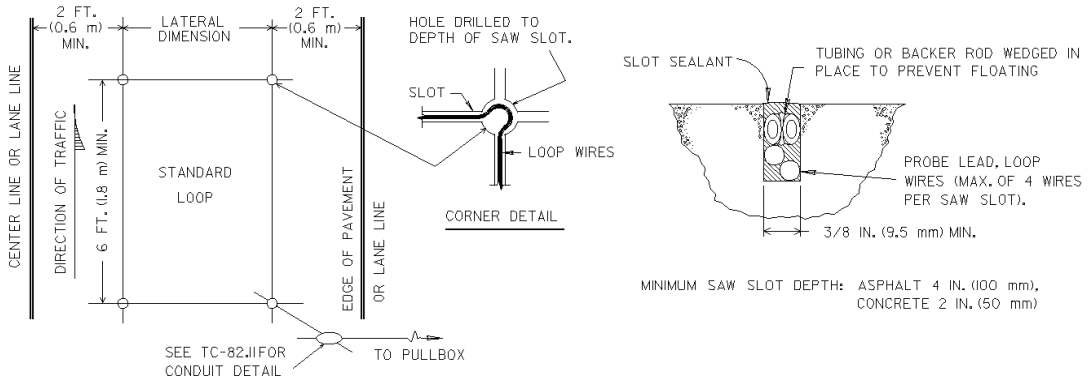

Loop Construction

Loop Perimeter feet	(meters)	Number of Turns
40	(less than 12)	4
40-160	(12 to 49)	3
over 160	(over 49)	2

Figure 498-24. Loop Detector Slots and Wiring

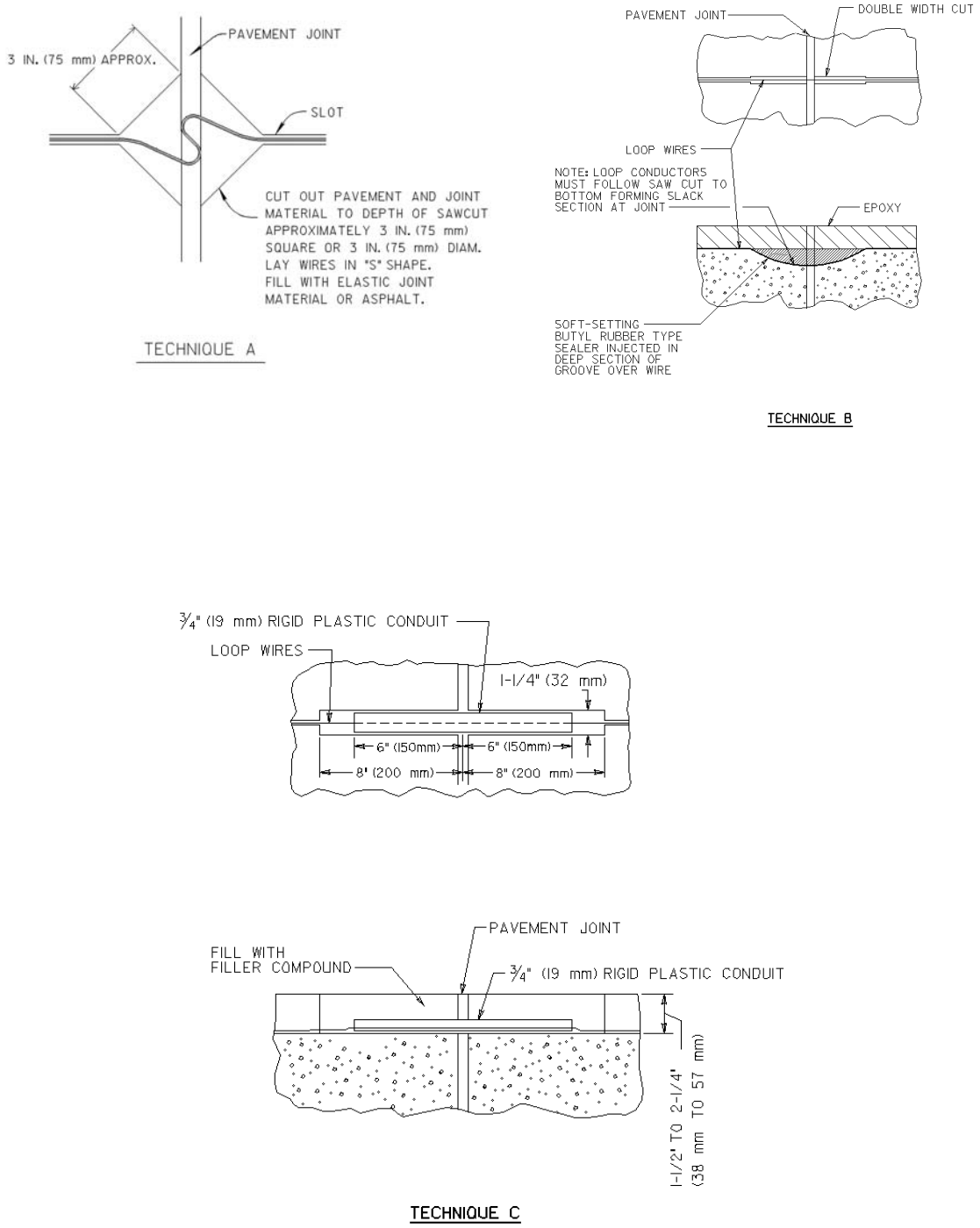

Figure 498-25. Loop Detector Wiring

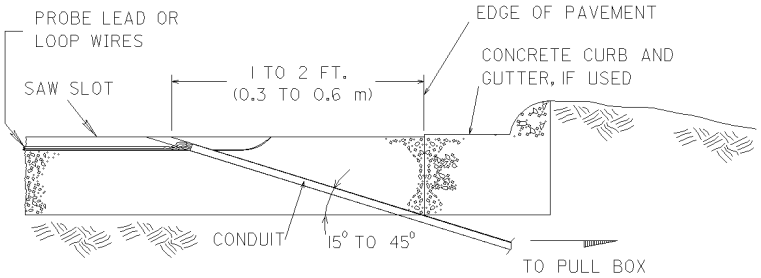

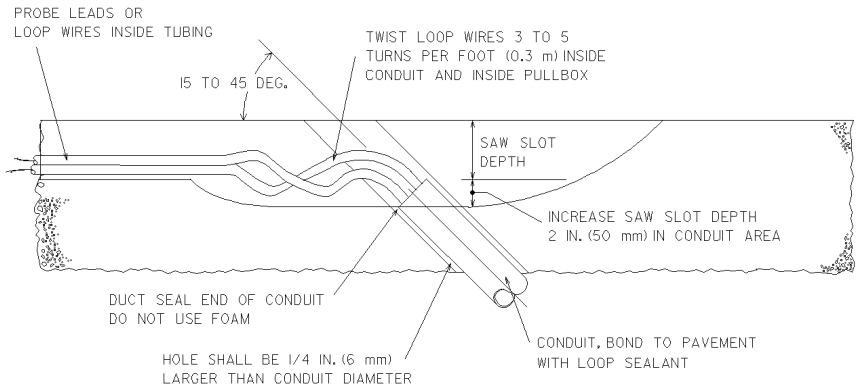

CONDUIT DRILLED HOLE DETAIL

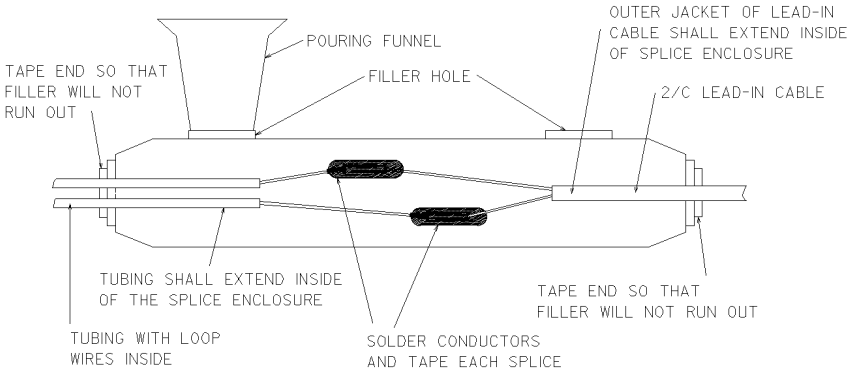

SPLICE ENCLOSURE DETAIL

Figure 498-26. Magnetometer Probes and Lead-In

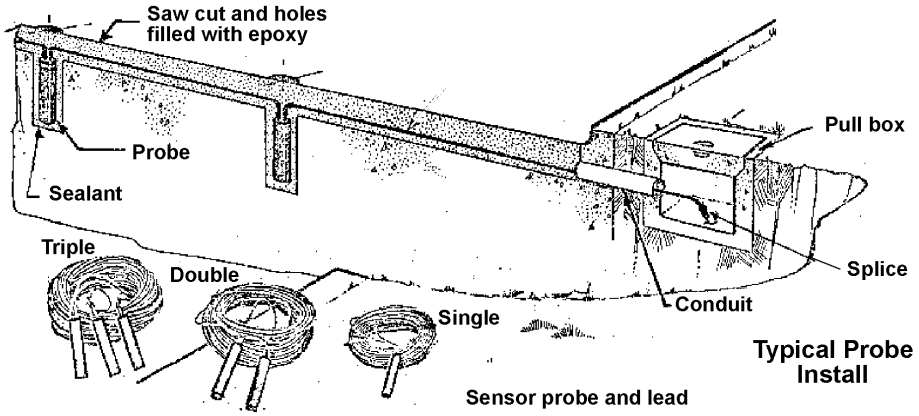

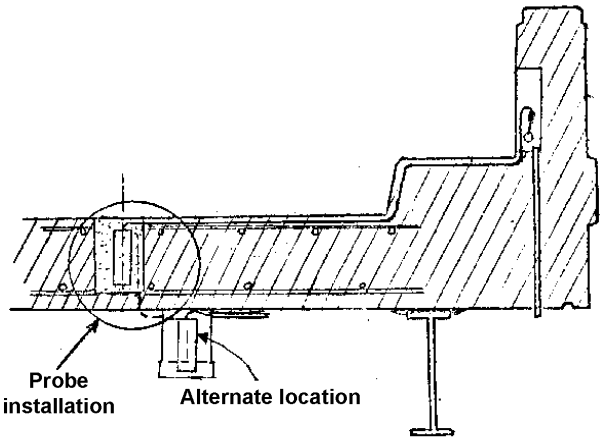

Figure 498-27. Ground Rod Testing

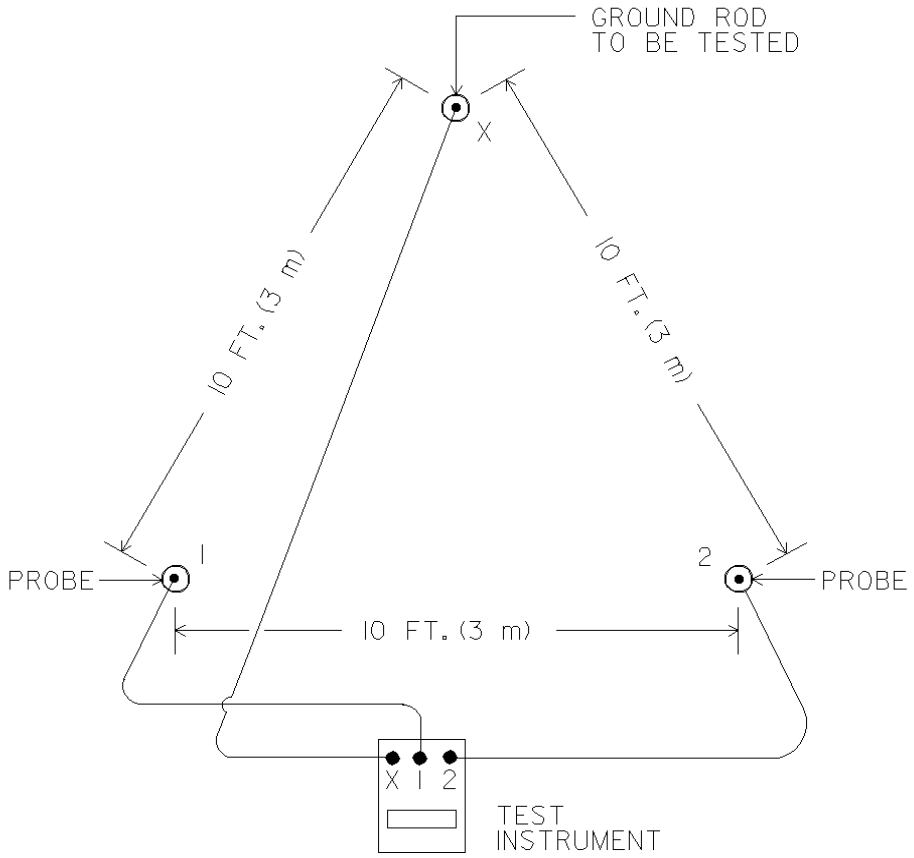

Figure 498-28. Short-Circuit Test

TESTING IS TO BE DONE WITH ALL ELECTRICAL LOADS, POWER SOURCES EQUIPMENT GROUNDS AND EARTH GROUNDS DISCONNECTED.

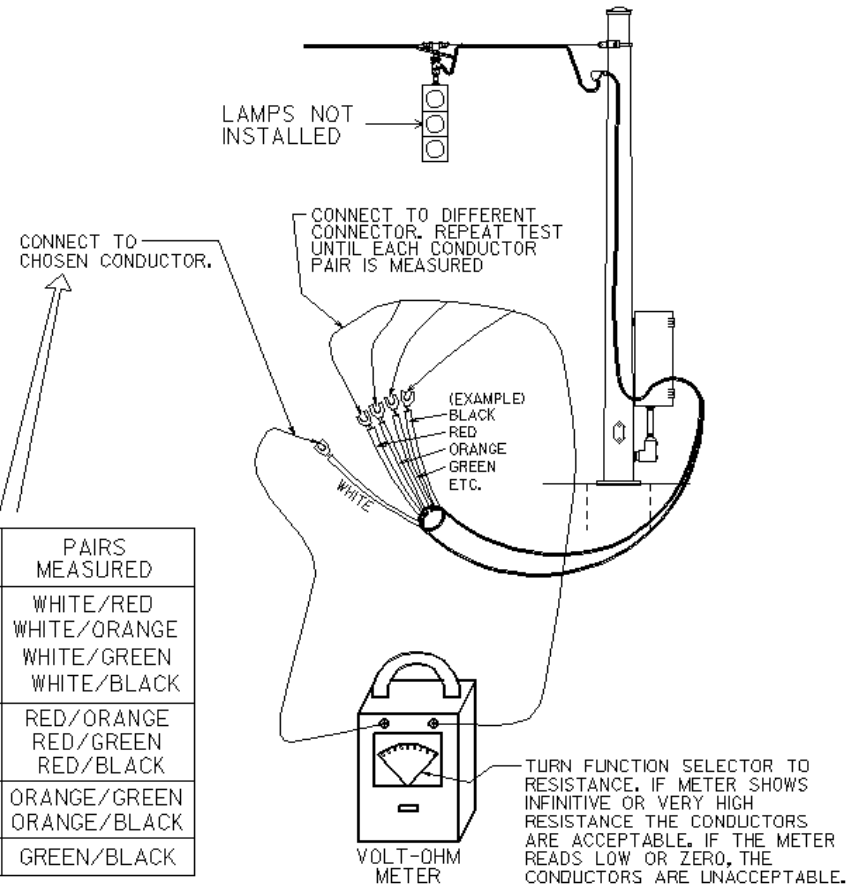

WIRE CONNECTED	PAIRS MEASURED
WHITE	WHITE/RED WHITE/ORANGE WHITE/GREEN WHITE/BLACK
RED	RED/ORANGE RED/GREEN RED/BLACK
ORANGE	ORANGE/GREEN ORANGE/BLACK
GREEN	GREEN/BLACK

CONDUCTORS MAY BE JUMPED TOGETHER FOR TESTING TO GROUND. IF A SHORT IS REVEALED, INDIVIDUAL CONDUCTORS MAY THEN BE TESTED TO GROUND TO ISOLATE THE FAULTY CONDUCTOR.

Figure 498-29. Circuit Continuity Test of Loop Wire (Before Splice to Lead-In Cable)

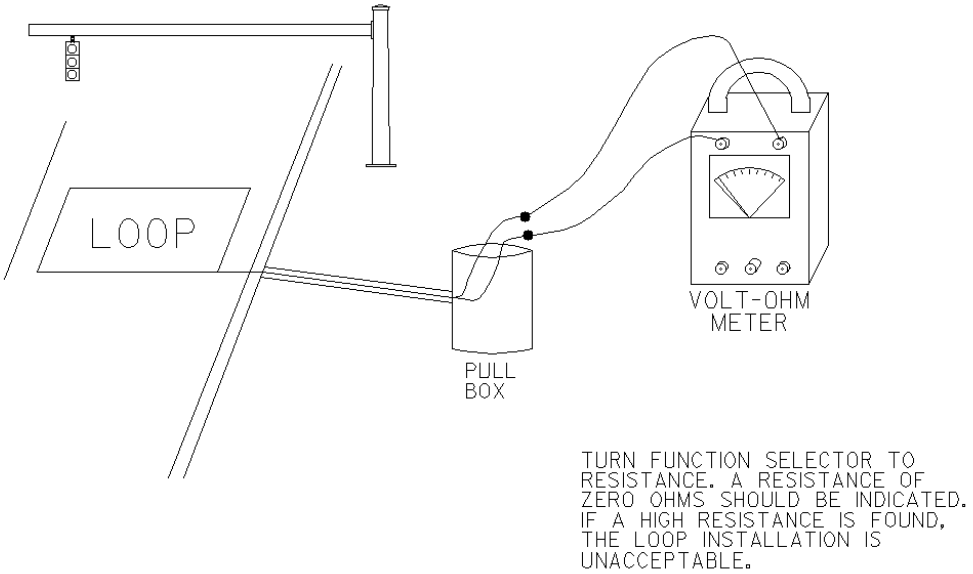

Figure 498-30. Circuit Continuity Test of Loop Wire and Lead-In Cable

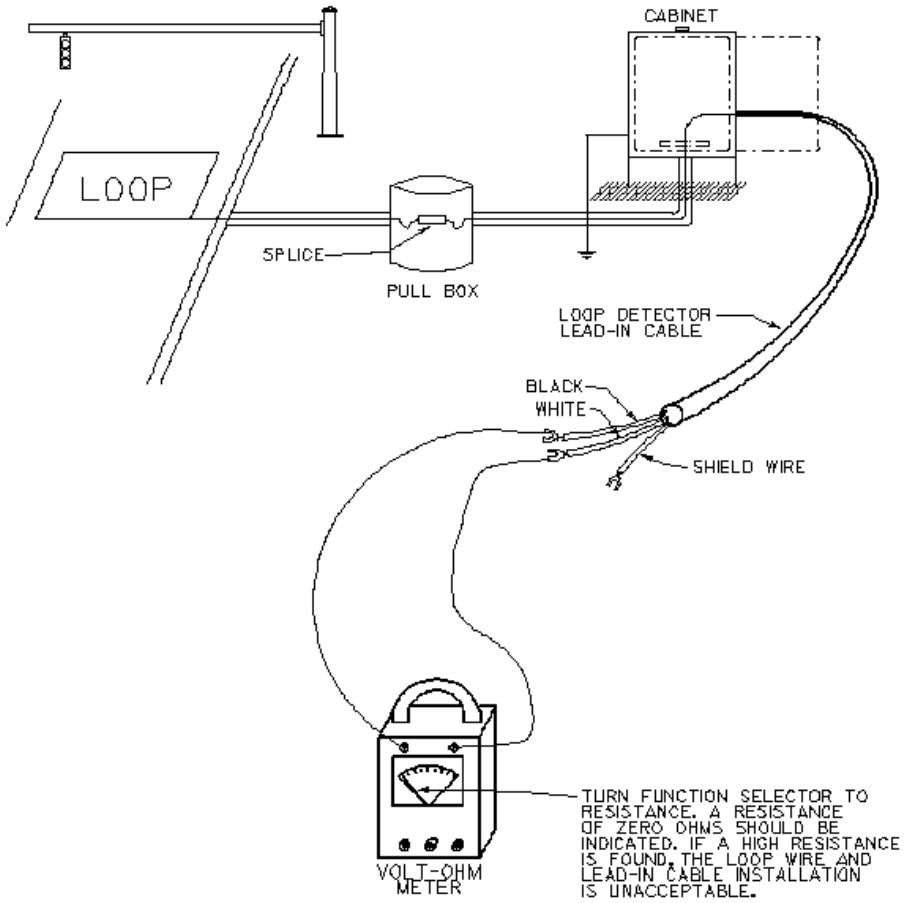

Figure 498-31. Circuit Continuity Test of Signal Cable Disconnected from Heads or Other Cables Such as Interconnect and Loop or Magnetometer Lead-In

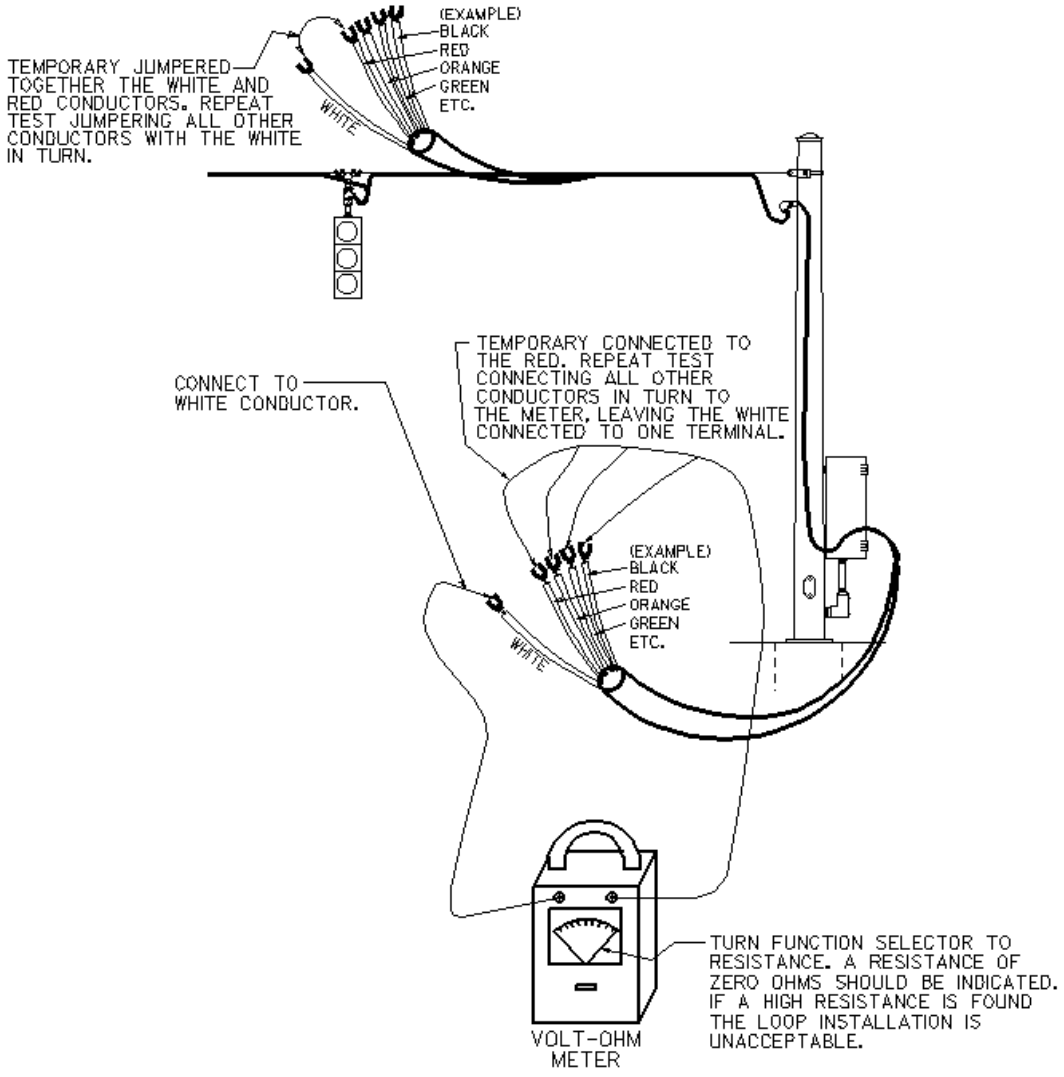

Figure 498-32. Circuit Continuity Test of Signal Cable With Cable Connected to the Signal Heads and Lamps Installed

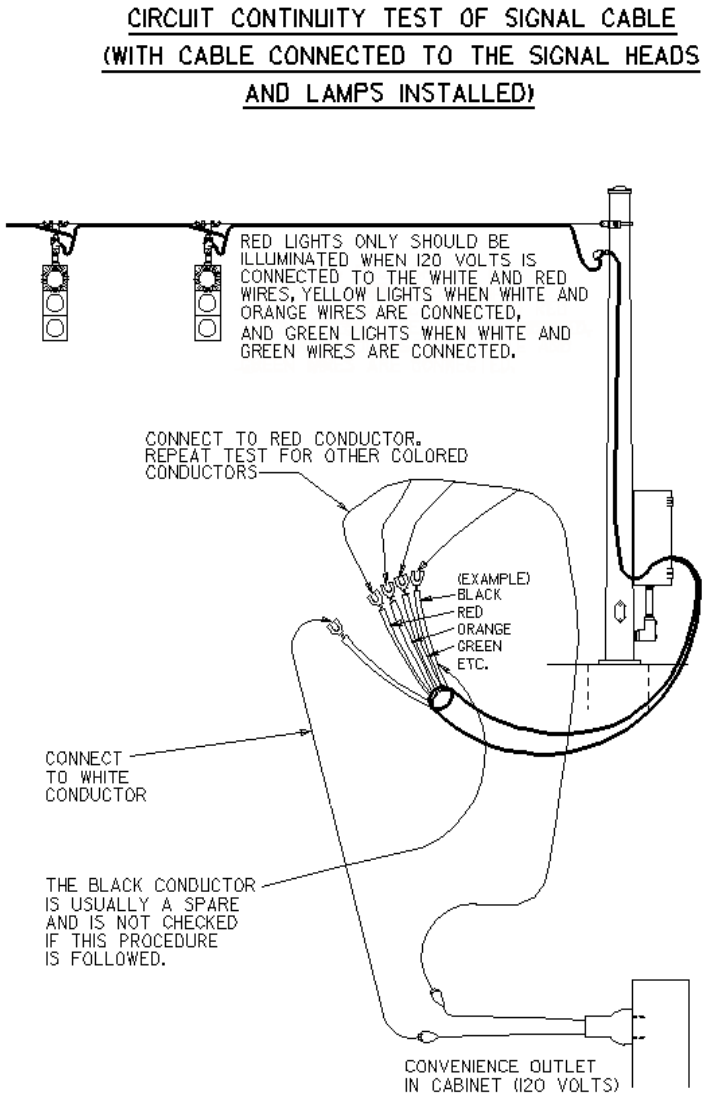

Figure 498-33. Cable Insulation Test (Loop Detector Wire)

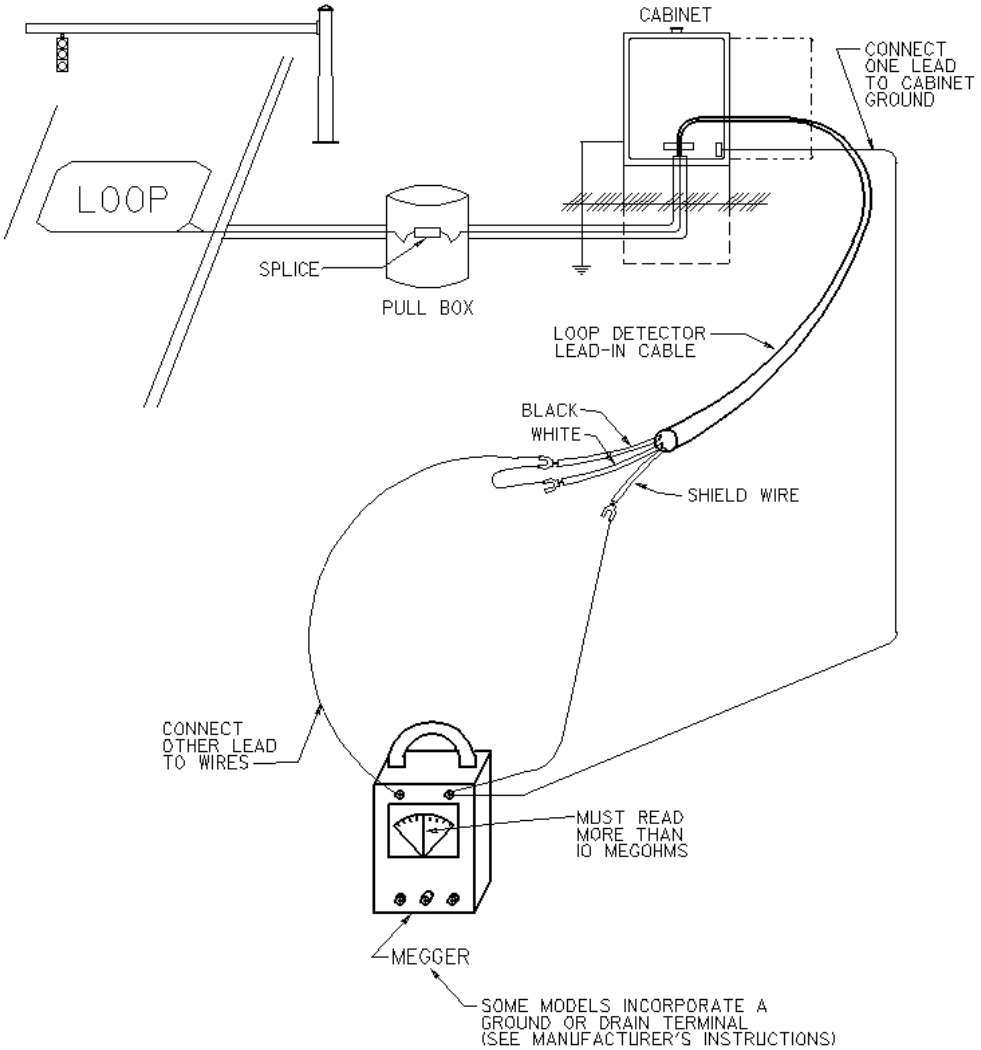

Figure 498-34. Cable Insulation Test (Signal Cable)

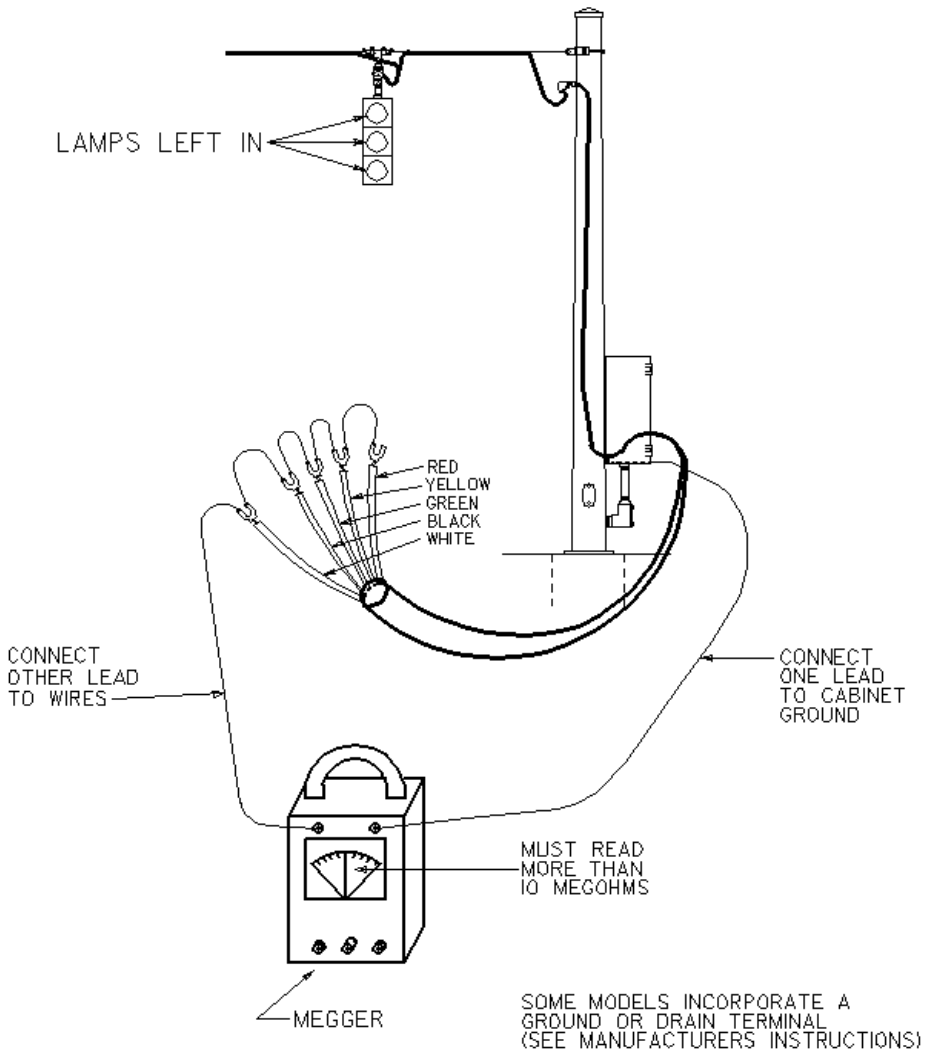

Figure 498-35. SCD TC-81.20 Signal Support Design Chart

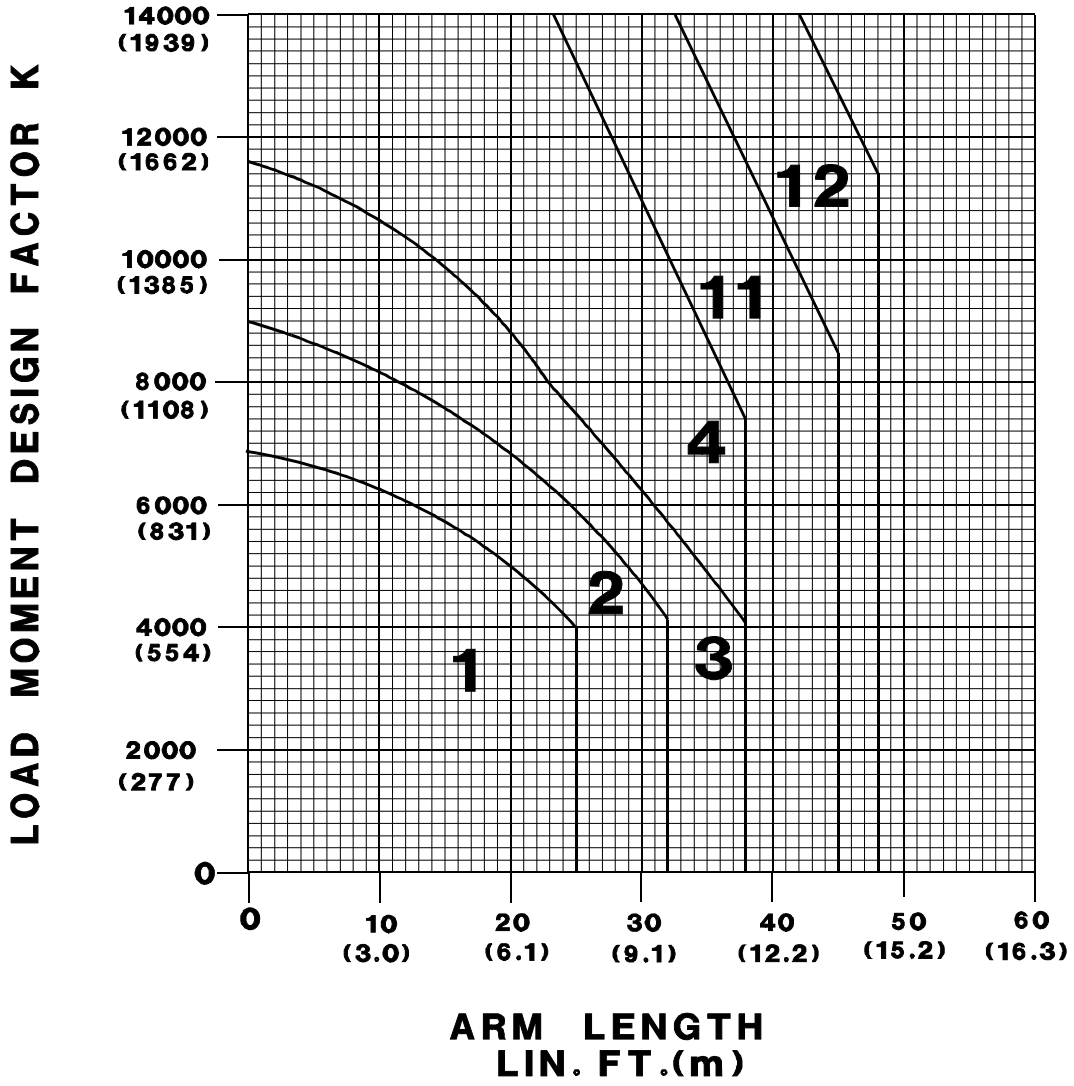

Figure 498-36. Plan Details for Strain Poles

From Sheet No. *	Reference Street * Station & Offset *	Pole No.	Design No.	Pole Height ft (m)	Foundation Elev. * Span Wire Attach. Ht. *	Index Line Angle (Deg.)	Angles (Deg.) from Index Line							
							Pedestrian Signals	Pedestrian Push buttons	Controller	Power Service	Cable Entrance 12" (0.3 m) from Top	Luminaire Bracket	Interconnect Pole Splice Box	2" (51 mm) Capped

* See ***Section 441-8***.

Notes:
1. All angles are measured clockwise.
2. The index line goes through the center of the handhole.

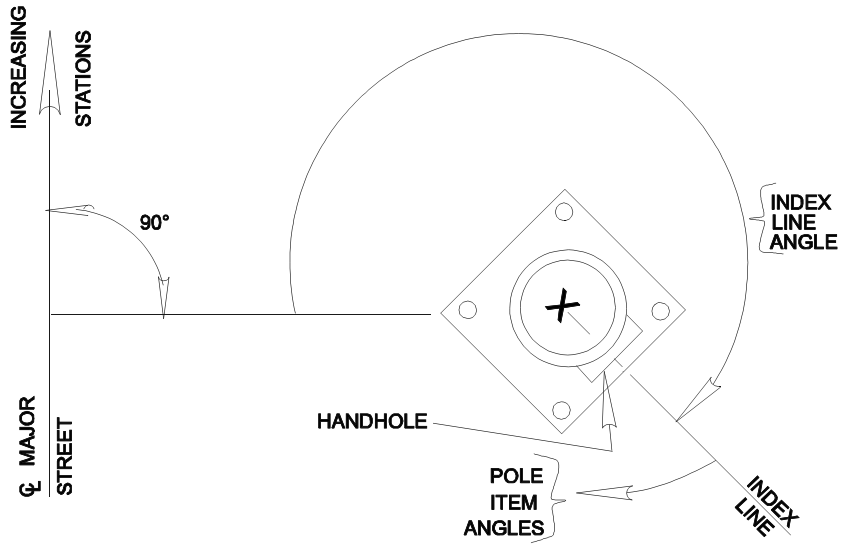

Figure 498-37. Plan Details for Signal Supports - Arm Lengths
(table is continued in Figure 498-38)

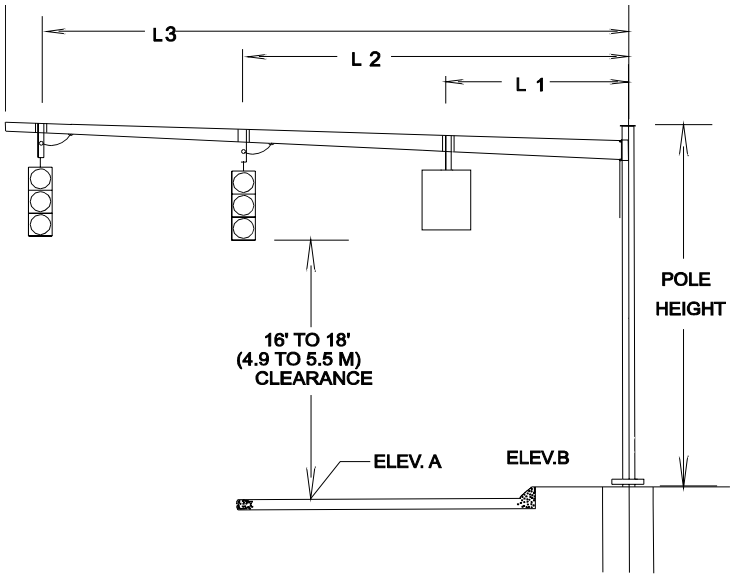

Support No.	Signal Support Type TC-81.20							Elevation	
	Design No.	Pole Height ft. (m)	L ft. (m)	L1 ft. (m)	L2 ft. (m)	L3 ft. (m)	L4 ft. (m)	A	B

Figure 498-38. Plan Details for Signal Supports - Mast Arm Orientation
(table continued from Figure 498-37)

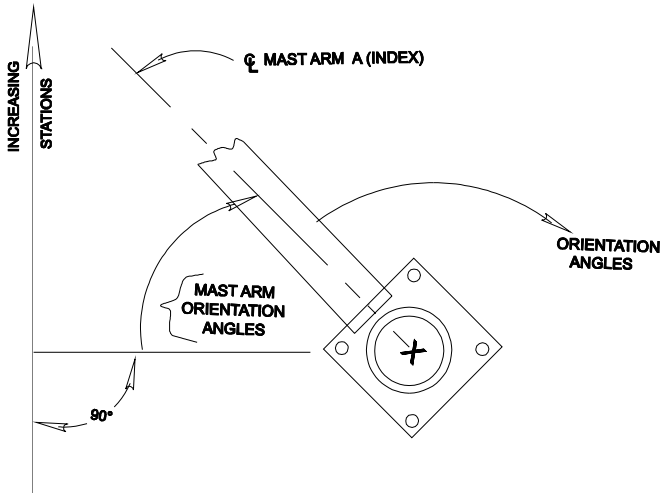

Notes:
1. All angles are measured clockwise.
2. Base plate is oriented square to Mast Arm A (largest arm) even if the support has two arms.

Mast Arm A Angle (Deg.)	Orientation Angles (Deg.) from Mast Arm A							
	Mast Arm B	Pedestrian Signal	Pedestrian Button	Power Service	Controller	Luminaire Bracket	Handhole	Cable Entrance 12" (0.3m) from top