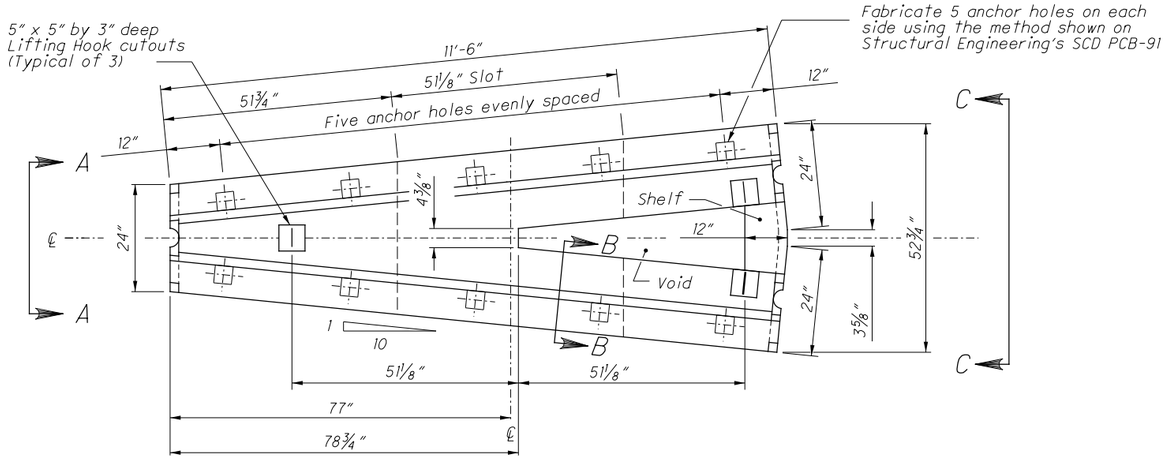

PLAN

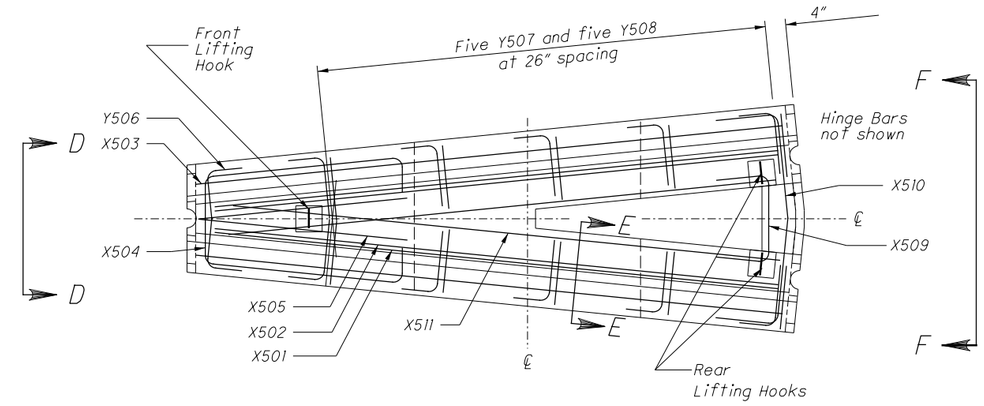

REINFORCING PLAN VIEW

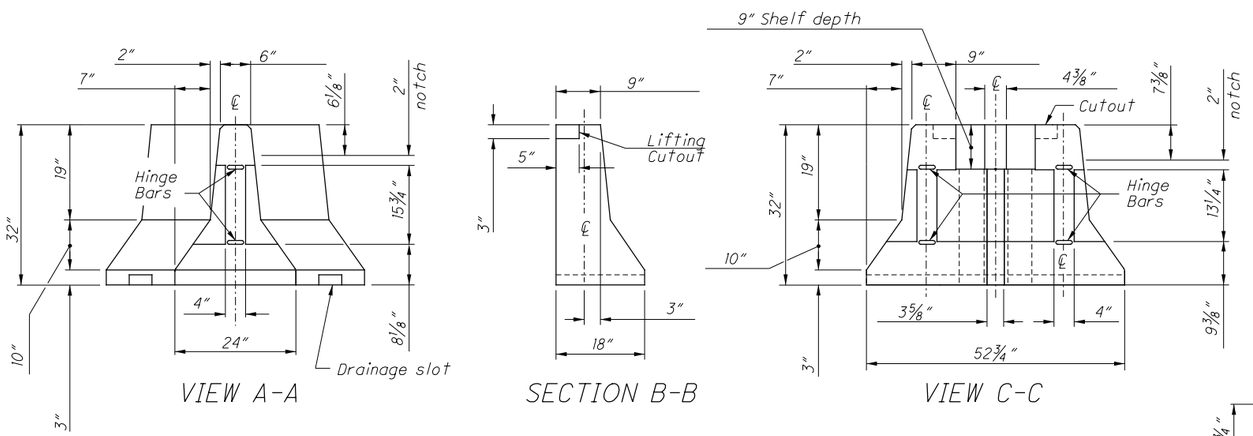

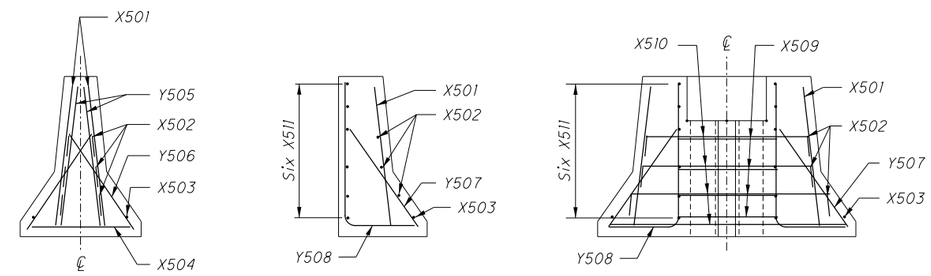

REINFORCING DETAILS

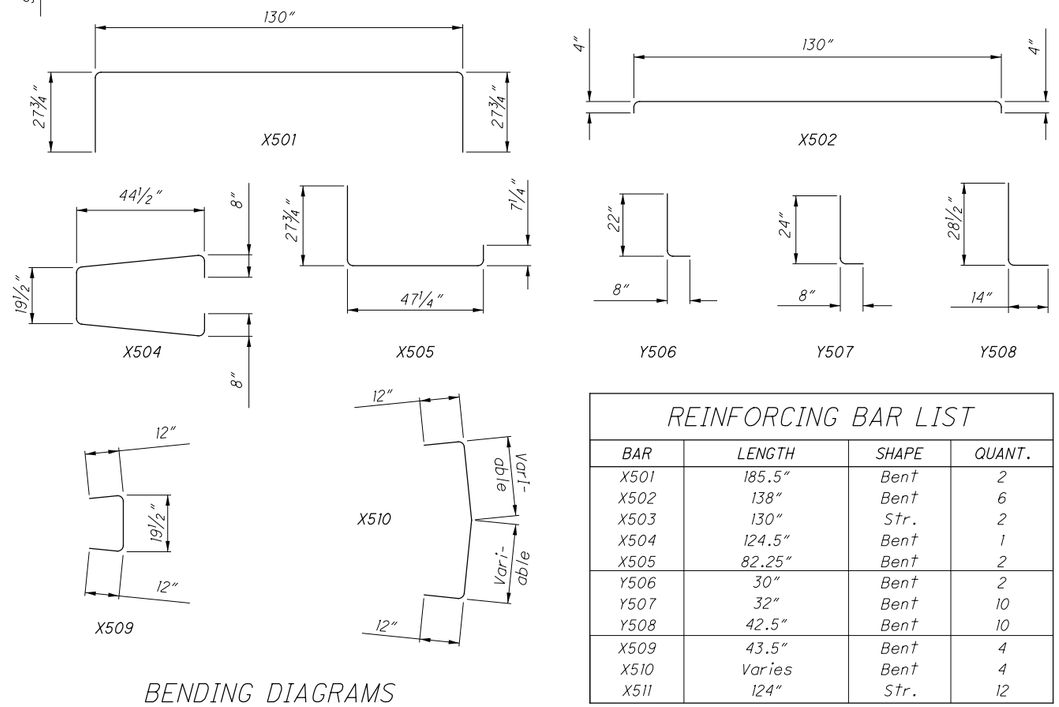

BENDING DIAGRAMS

NOTES

GENERAL: This barrier segment is used to split one run of portable concrete barrier into dual runs. Attach directly to ODOT's 32" PCB; however, other approved barrier shapes may be connected to this segment by the use of an appropriate transition unit. Attach at least one standard PCB segment in between this "Y" and an Impact Attenuator. Its field application is shown in MOT plans and on MT standard drawings. Do not use this barrier in an unanchored configuration next to bridge deck edges or similiar dropoffs, anchor according to method shown on PCBDD or other approved method.

BARRIER DETAILS: Use SCD RM-4.2 for details not shown here, including the geometry of this pin and loop segment matches in every way the design of the end connections shown on the HINGED CONNECTION and JOINT CONNECTION Details (the alternate J-J Hooks connection design is permitted). Additionally, barrier edges may be radiused or chamfered as per the LEGEND Note, barrier is to be permanently marked as mentioned in the MARKINGS Note, and delineate as per the REFLECTORIZATION Note.

MATERIAL SPECIFICATIONS: The minimum design strength of the concrete is 4,000 psi and meets the requirements of CMS 499. For reinforcing steel, use ASTM A615 Grade 60 black steel and provide 2" min. rebar cover. Material specifications for the Hinge and Reinforcing Bars, as well as the Connecting Hardware may be found on SCD RM-4.2. For additional material specifications not shown here, see SCD RM-4.2 and CMS 622.

HANDLING: The fabricator is responsible for the design of a lifting system for handling segments. As a minimum, use three lifting points at the locations suggested in the Plan views, and design with a lifting factor of safety of 4. Any protrusions from the lifting hook design is not to affect the crash worthiness of the barrier. The calculations shall be signed, sealed and dated by a Registered Engineer and include these calculations with the Manufacturing Drawings required by Supplement 1073.12. Refer to Part 5 of the PCI Handbook. Approximate segment weight is 8,500 lbs [3850 kg].

PAYMENT: Payment will be made under **Item 622 - Portable Barrier, "Y" Connector, Each,** and will include all forms, materials and labor to cast this segment.

ALTERNATE METHOD: Contractors may choose to use a wide Impact Attenuator in lieu of the concrete "Y" alternate. The chosen unit will be a Type 2 or 3 Impact Attenuator matching the product previously called for on the project plans at the expected installation location.

REINFORCING BAR LIST

BAR	LENGTH	SHAPE	QUANT.
X501	185.5"	Bent	2
X502	138"	Bent	6
X503	130"	Str.	2
X504	124.5"	Bent	1
X505	82.25"	Bent	2
Y506	30"	Bent	2
Y507	32"	Bent	10
Y508	42.5"	Bent	10
X509	43.5"	Bent	4
X510	Varies	Bent	4
X511	124"	Str.	12

OFFICE OF ROADWAY ENGINEERING

DESIGNED XXX REVIEWED XXX

REVISION DATE 04-16-2010 CHECKED CHECKED

PLAN INSERT SHEET

*PCB "Y" CONNECTOR SEGMENT

THIS DRAWING REPLACES Y BARRIER PLAN ISERT SHEET DATED 11-30-07

PIS PCB-Y

1 / 1

0 / 0