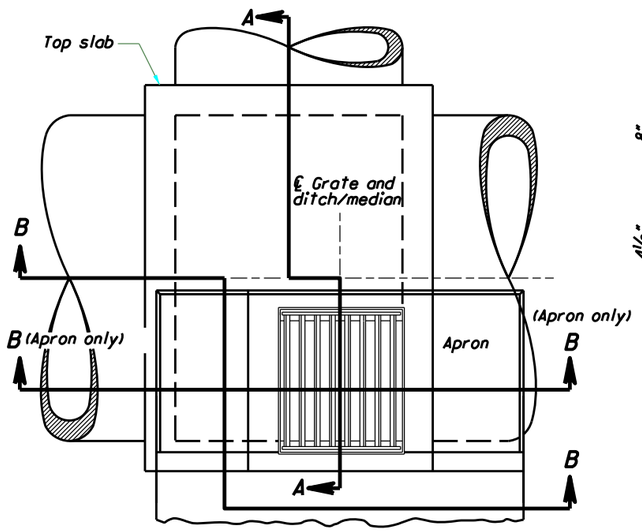

PLAN

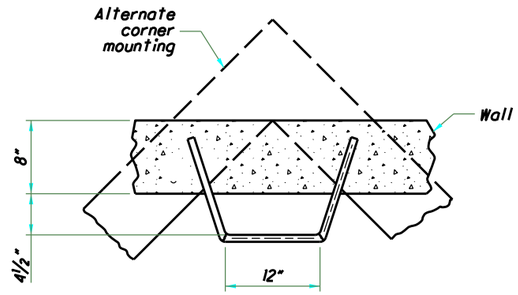

STEP DETAIL

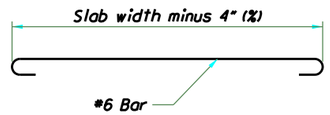

Bar length = % dimension + 16"

BENDING DIAGRAM

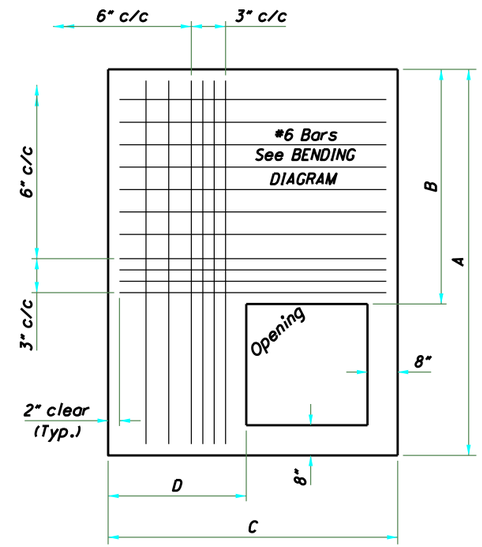

TOP SLAB DETAIL

TOP SLAB DIMENSIONS (English)						
PIPE DIAMETER	CB-4A				CB-5A & 8A	
	A	B	C	D	A or C	B or D
Under 42"	5'-4"	2'-0"	6'-8"	8"	5'-4"	2'-0"
42"	5'-7"	2'-3"	6'-8"	8"	5'-7"	2'-3"
48"	6'-2"	2'-10"	6'-8"	8"	6'-2"	2'-10"
54"	6'-9"	3'-5"	6'-9"	9"	6'-9"	3'-5"
60"	7'-4"	4'-0"	7'-4"	1'-4"	7'-4"	4'-0"
66"	7'-11"	4'-7"	7'-11"	1'-11"	7'-11"	4'-7"
72"	8'-6"	5'-2"	8'-6"	2'-6"	8'-6"	5'-2"

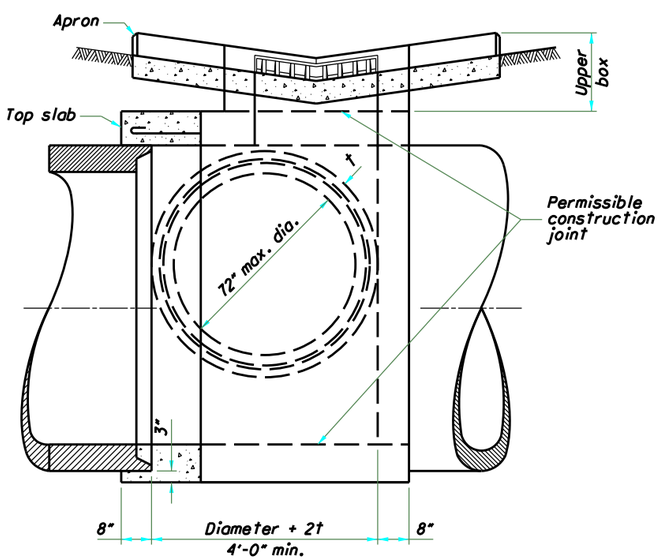

SECTION B-B

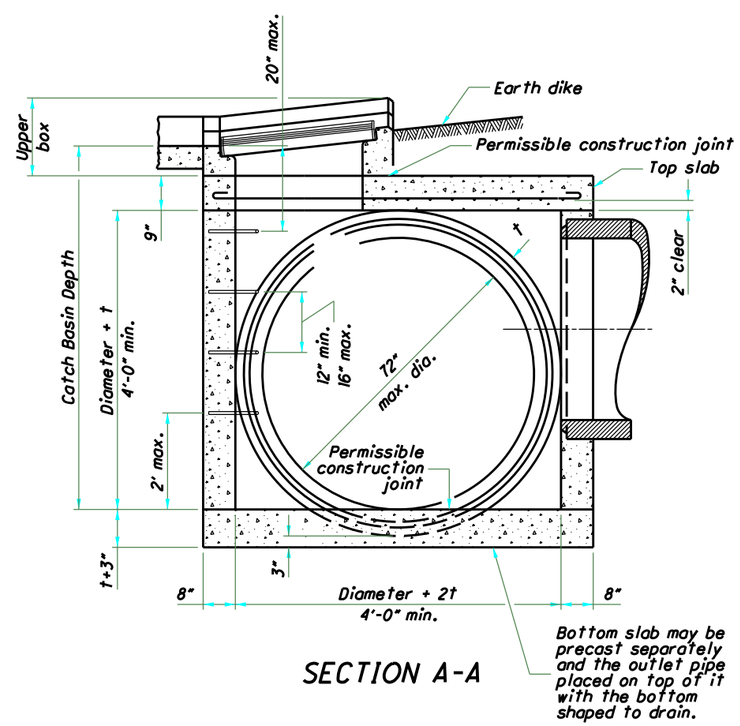

SECTION A-A

NOTES

DESIGN: The lower box, shown here, is designed for use with the upper boxes of **SCD CB-3.1, CB-3.2, and CB-3.3** (shown). See the appropriate drawing for specific details.

WALLS: Construct brick or cast-in-place walls with a nominal thickness of 8" from the bottom slab to the upper box.

PRECAST CONSTRUCTION: Permitted, except for the apron. Meet the concrete requirements of CMS 706.13. Provide precast walls at least 6" thick with sufficient reinforcing to permit shipping and placement without damage. Reduce the wall thickness from the outside.

STEPS: Provide steps meeting the requirements of **SCD MH-1.1** where the depth exceeds 6'.

BASINS OVER 12 FEET DEEP: Use precast or cast-in-place concrete; reinforce with #4 bars on 12" centers both vertically and horizontally with 2" clearance from inside wall face.

LOCATION AND ELEVATION: When given on the plans, the location is the center of the grate. The elevation is the lowest point on the grate.

OPENINGS: Obtain the Engineer's approval for any pipe openings greater than 4" from the outside of the pipe to the structure. Fill all voids per CMS 604.

CONCRETE APRONS: Construct aprons in such a manner that the outside edges are at equal elevations.

If specified in the plans, grouted riprap may be used in place of the concrete apron.

DITCH PROTECTION: Provide a 150' length of ditch erosion protection as shown. Installation and payment for ditch erosion protection are per CMS 670.

BASINS IN SAG: When in a sag, omit the earth dike and longitudinal slope of the grate, and provide concrete apron and ditch protection on each side of the basin.

PAYMENT: The concrete apron with cutoff wall or grouted riprap and dike are incidental to **Item 604 - Catch Basins.** However, the apron is not required when **Item 604 - Catch Basins, Without Apron,** is specified.

CATCH BASINS No. 4A, No. 5A, and No. 8A

STATE OF OHIO DEPARTMENT OF TRANSPORTATION

STATE HYDRAULIC ENGINEER

REVISIONS
7-20-01
7-19-02
7-15-05
7-20-12

ROADWAY HYDRAULIC ENGINEER
Matt Cozzoli

OFFICE OF HYDRAULIC ENGINEERING

STANDARD HYDRAULIC CONSTRUCTION DRAWING

CATCH BASINS No's 4A, 5A, 8A

SCD NUMBER
CB-3.4