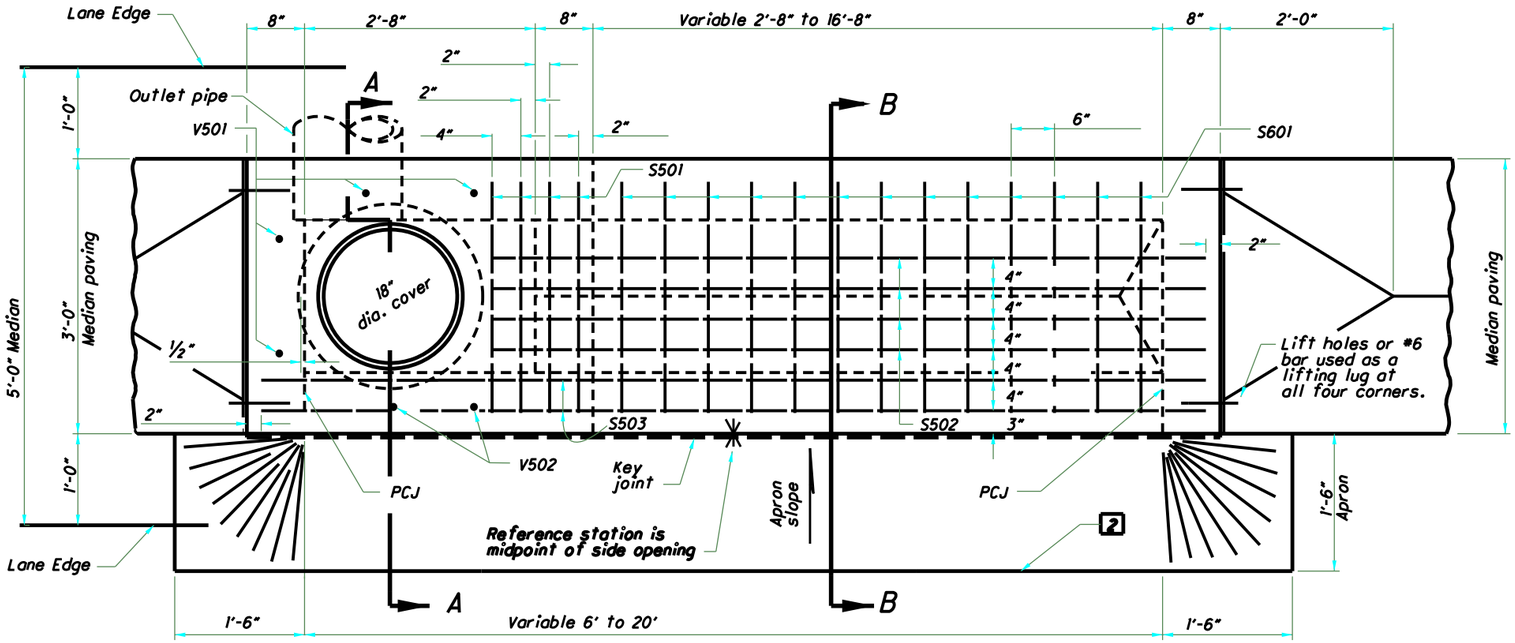

PLAN VIEW

See Sheet 2 of 2 for Sections

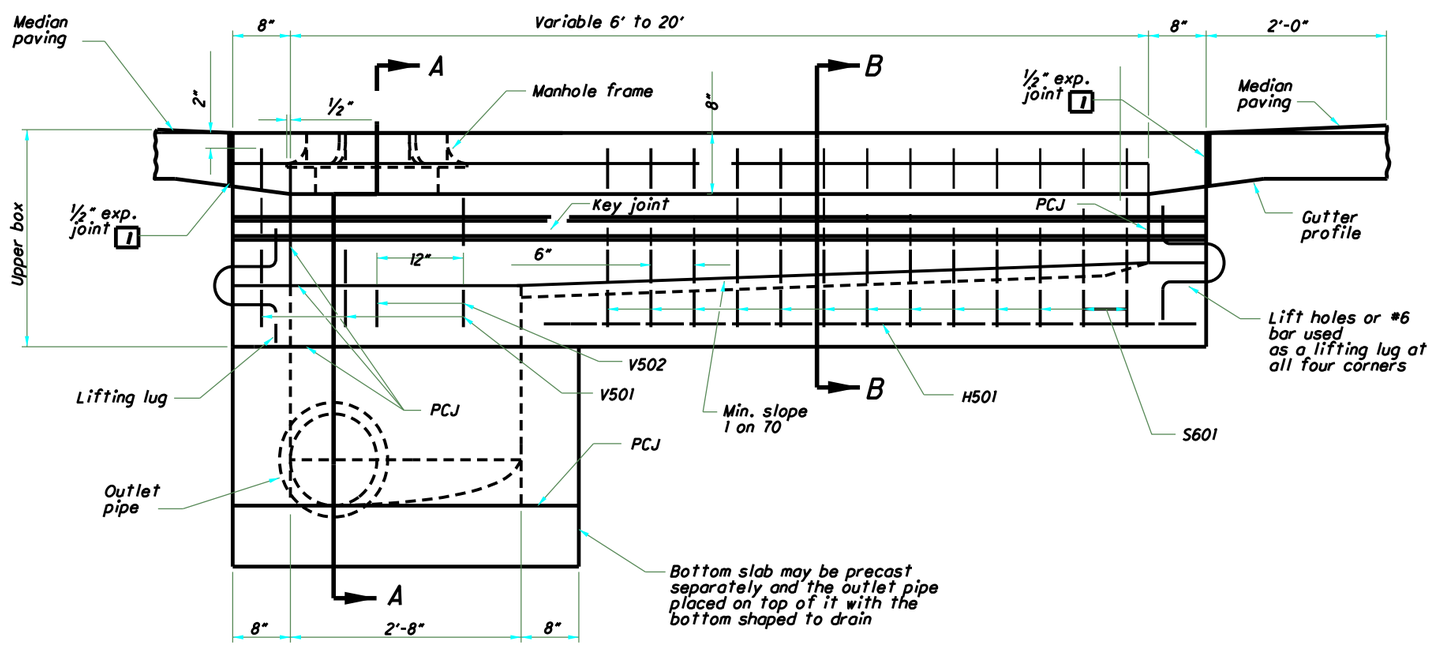

FRONT ELEVATION

MEDIAN INLETS (6' to 20')

NOTES

CASTINGS: Provide a design essentially the same and equally as strong and heavy as those shown, or meet the requirements of CMS 711.14.

Fit and finish the bearing areas of frame and cover to provide a firm and even seat for the entire cover in the frame. Ensure there are no projections on bearing areas of either casting, and the cover seats in its frame without rocking.

Minimum weight of frame and cover: 130 lbs.

SUMP WALLS: The walls between the upper box and bottom slab may be brick, concrete block, cast-in-place or precast concrete construction. Precast walls shall have a minimum thickness of 6" and shall be reinforced sufficiently to permit shipping and handling without damage.

DEPRESSED APRON: The 18" depressed apron shall be an integral part of concrete pavements, with the hand finishing required for the 2" depression being performed before the initial set. When the inlets are used with flexible pavements, the depressed apron shall be of 9" thick Class C concrete. Payment for all labor and material required to construct the depressed apron shall be included in the cost of the inlet. The subgrade shall be adjusted to receive the depressed apron.

CONCRETE: Provide Class C concrete when cast-in-place. When precast, provide concrete that meets the requirements of CMS 706.13. Mark the inlet number on the structure. Seal the exposed concrete surfaces of the inlet per item 512 when specified in the plans.

REINFORCING STEEL: Provide epoxy coated reinforcing steel in accordance with CMS 509.09.

QUANTITIES: Deduct the quantity of median pavement within the limits of the inlet from the project quantities.

SIDE OPENING: Details shown for the right side of the inlet also apply to the left side openings where needed for drainage of the left median shoulder as shown in the plans. Locate the sump at the downgrade end of the inlet for both right and left side openings.

OPENINGS: All pipe openings are the outside diameter of the pipe being supplied plus 2" when fabricated or field cut. Fill any voids per CMS 601.

UPPER BOX: May be precast, or cast-in-place. If precast, set it in a bed of mortar at the sump walls and a bed of compacted sand at all other points. Provide reinforcing steel for precast upper boxes equivalent to the design shown. Construction joints other than those shown are permitted in the endwalls to facilitate the removal of precasting forms. The interior trough may have a flat bottom.

PCJ: Permissible Construction Joint.

LEGEND

1 Provide a 1" minimum expansion joint in concrete pavements or concrete shoulders.

2 Butt joint when used in flexible pavement.

STATE OF OHIO DEPARTMENT OF TRANSPORTATION

STATE HYDRAULIC ENGINEER

REVISIONS
7-20-01
7-19-02
7-15-05
7-20-12

ROADWAY HYDRAULIC ENGINEER
Matt Cozzoli

OFFICE OF HYDRAULIC ENGINEERING

STANDARD HYDRAULIC CONSTRUCTION DRAWING

MEDIAN INLET NO. 2

SCD NUMBER
I-1.1

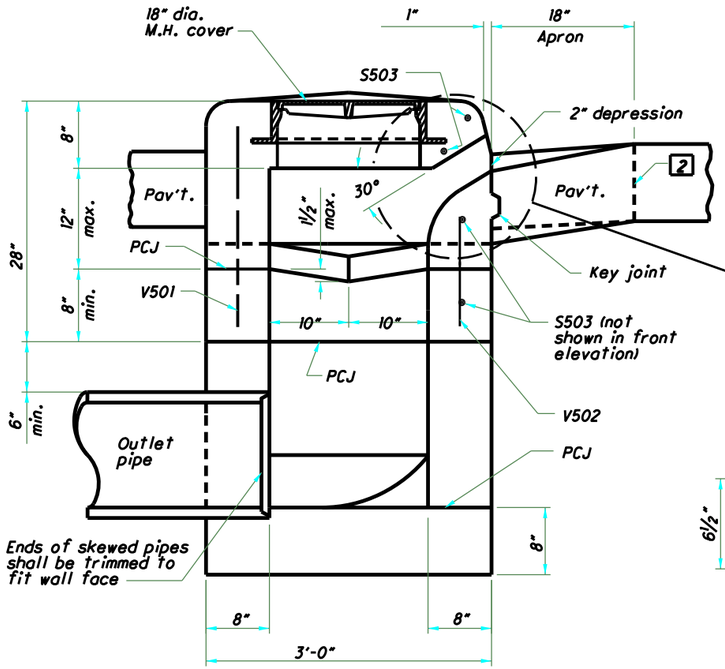

SECTION A-A
(See Sht. 1/2.)

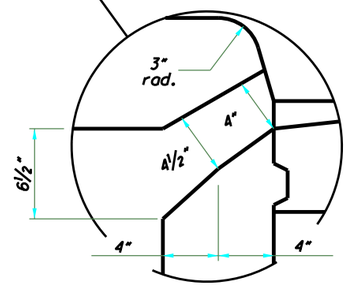

ALTERNATE OPENING

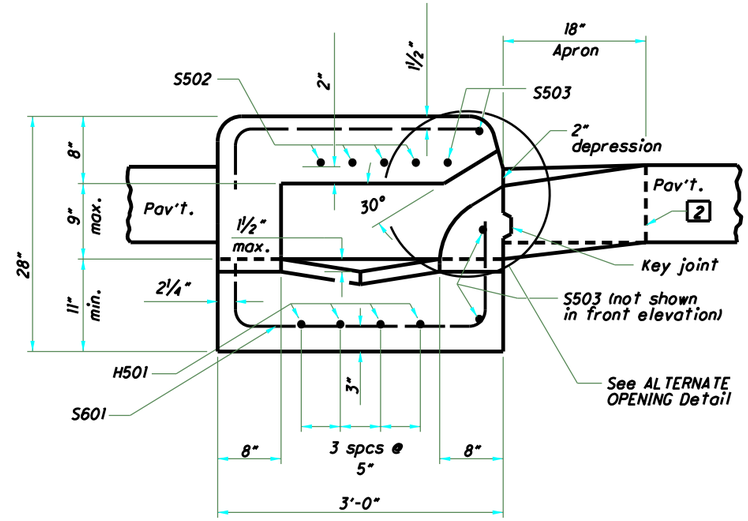

SECTION B-B
(See Sht. 1/2)

See Sheet 1 of 2 for NOTES and LEGEND

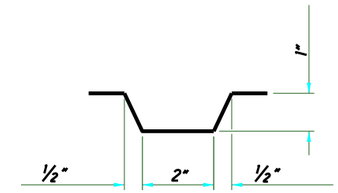

KEY JOINT

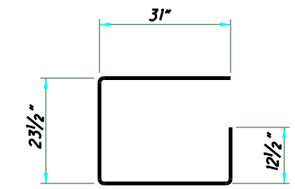

S601

#6 ROUND BAR
BENDING DIAGRAM

CONCRETE AND REINFORCING QUANTITIES (English)

INLET LENGTH	CONCRETE	REINFORCING														Weight
		S601 #6 bar		S501 #5 bar		S502 #5 bar		S503 #5 bar		H501 #5 bar		V501 #5 bar		V502 #5 bar		
	(cubic yards)	No.	Length	No.	Length	No.	Length	No.	Length	No.	Length	No.	Length	No.	Length	(lbs.)
6'	2.2	5	8'-2"	4	2'-7"	4	4'-4"	4	7'-0"	4	3'-8"	4	2'-0"	2	1'-0"	145
8'	2.6	9	8'-2"	4	2'-7"	4	6'-4"	4	9'-0"	4	5'-8"	4	2'-0"	2	1'-0"	219
10'	3.0	13	8'-2"	4	2'-7"	4	8'-4"	4	11'-0"	4	7'-8"	4	2'-0"	2	1'-0"	293
12'	3.4	17	8'-2"	4	2'-7"	4	10'-4"	4	13'-0"	4	9'-8"	4	2'-0"	2	1'-0"	367
14'	3.8	21	8'-2"	4	2'-7"	4	12'-4"	4	15'-0"	4	11'-8"	4	2'-0"	2	1'-0"	442
16'	4.2	25	8'-2"	4	2'-7"	4	14'-4"	4	17'-0"	4	13'-8"	4	2'-0"	2	1'-0"	516
18'	4.6	29	8'-2"	4	2'-7"	4	16'-4"	4	19'-0"	4	15'-8"	4	2'-0"	2	1'-0"	590
20'	5.0	33	8'-2"	4	2'-7"	4	18'-4"	4	21'-0"	4	17'-8"	4	2'-0"	2	1'-0"	664

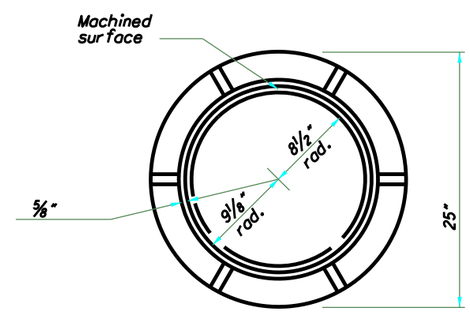

PLAN OF FRAME

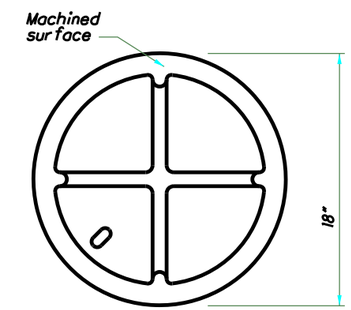

BOTTOM PLAN OF COVER

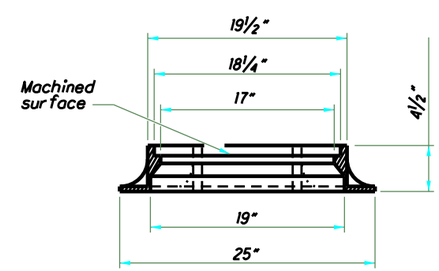

FRAME SECTION
MANHOLE FRAME

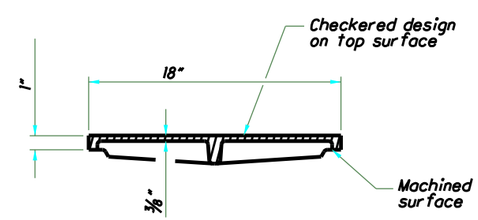

COVER SECTION
MANHOLE COVER

Note:
The above table of quantities is included with this drawing for estimating purposes only. Include the cost of furnishing and placing all concrete, reinforcing steel, casting, etc., in Item 604 for payment. All straight bars are #5.

STATE OF OHIO DEPARTMENT OF TRANSPORTATION
STATE HYDRAULIC ENGINEER

REVISIONS
7-20-01
7-19-02
7-15-05
7-20-12

ROADWAY HYDRAULIC ENGINEER
Matt Cozzoli

OFFICE OF HYDRAULIC ENGINEERING

STANDARD HYDRAULIC CONSTRUCTION DRAWING
MEDIAN INLET No. 2

SCD NUMBER
I-1.1

2 / 2