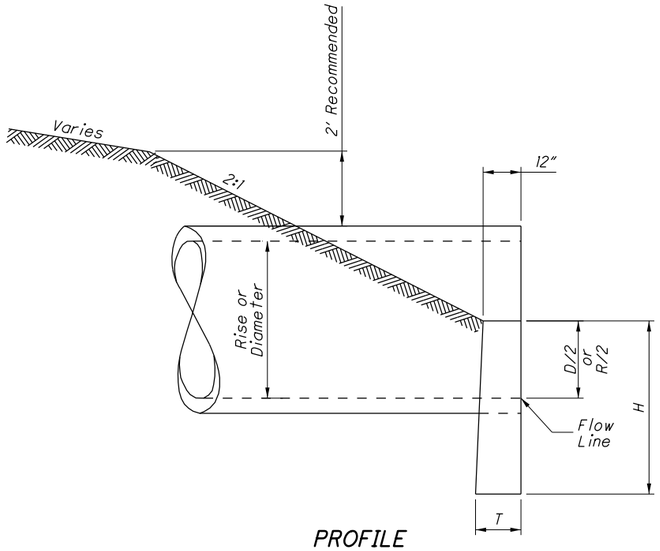

PROFILE

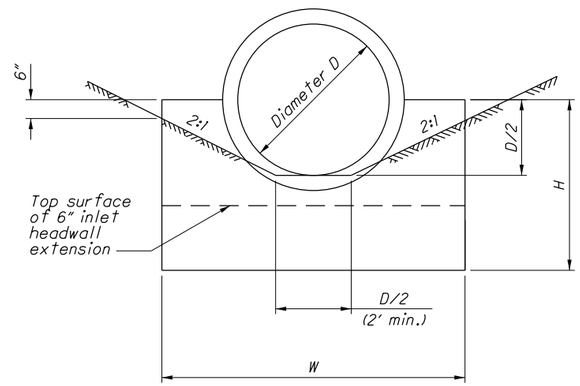

CIRCULAR

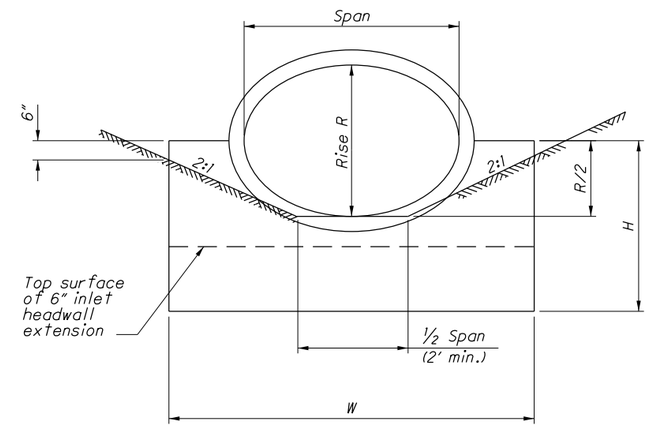

ELLIPTICAL

CONCRETE PIPE

See Sheet 2 of 2 for Pipe Tables and NOTES.

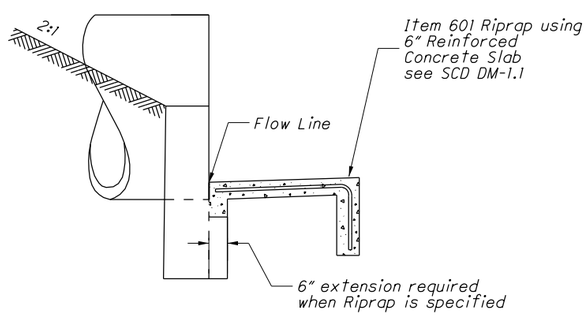

INLET CHANNEL PROTECTION DETAIL

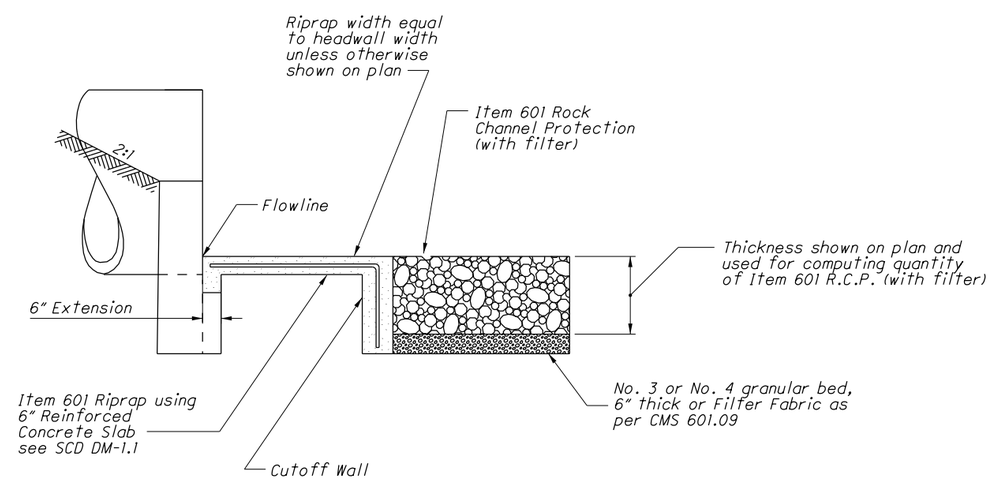

OUTLET CHANNEL PROTECTION DETAIL

STATE OF OHIO DEPARTMENT OF TRANSPORTATION

STATE HYDRAULIC ENGINEER

REVISIONS
7/30/07
7/20/12
1/18/13

ROADWAY HYDRAULIC ENGINEER
Matt Cozzoli

OFFICE OF HYDRAULIC ENGINEERING

STANDARD HYDRAULIC CONSTRUCTION DRAWING

HALF-HEIGHT HEADWALLS FOR CONCRETE PIPE

SCD NUMBER
HW-2.2

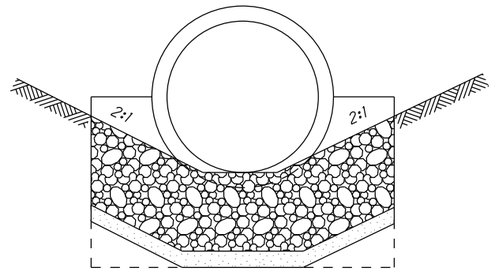

Riprap and rock channel protection width equal to headwall width unless otherwise shown on the plans. (Minimum width 4'-0".)

NOTES

GENERAL: Provide a riprap reinforced concrete slab according to SCD DM-1.1 if the pipe is depressed or it is specified in the plan. Payment for the slab is made per square yard of **Item 601 Riprap Using 6" Reinforced Concrete** Slab and includes the cost of the cutoff wall.

This drawing is for cast in place half-height concrete headwalls. When furnishing precast half-height headwalls, conform to pre-approved designs on file with the Office of Materials Management. Precast half-height headwalls are only approved for round conduits with a maximum conduit diameter of 78".

CONCRETE: Use 4000 psi compressive strength concrete for headwalls.

Concrete quantities are based on headwalls without the 6" extension under the channel protection.

C.I.P. HEADWALL FOR CONCRETE PIPE (English)

CIRCULAR					ELLIPTICAL					
D	W	H	T	Conc. cu. yds.	Span	Rise	W	H	T	Conc. cu. yds.
12"	2'-0"	3'-0"	12"	0.20	--	--	--	--	--	--
15"	2'-6"	3'-2"	12"	0.25	--	--	--	--	--	--
18"	3'-0"	3'-3"	12"	0.31	23"	14"	3'-0"	3'-2"	12"	0.29
21"	3'-6"	3'-4"	12"	0.37	30"	19"	3'-7"	3'-4"	12"	0.35
24"	4'-0"	3'-6"	12"	0.43	34"	22"	3'-11"	3'-5"	12"	0.38
27"	4'-6"	3'-8"	12"	0.49	38"	24"	4'-6"	3'-6"	12"	0.44
30"	5'-0"	3'-9"	12"	0.56	42"	27"	4'-8"	3'-7"	12"	0.45
33"	5'-6"	3'-10"	12"	0.62	45"	29"	5'-2"	3'-8"	12"	0.49
36"	6'-0"	4'-0"	12"	0.69	49"	32"	5'-5"	3'-10"	12"	0.52
39"	6'-6"	4'-2"	12"	0.77	53"	34"	5'-11"	4'-0"	14"	0.66
42"	7'-0"	4'-3"	12"	0.84	60"	38"	6'-10"	4'-2"	14"	0.82
48"	8'-0"	4'-6"	14"	1.09	68"	43"	8'-0"	4'-4"	16"	1.01
54"	9'-3"	4'-9"	14"	1.32	76"	48"	9'-2"	5'-0"	16"	1.34
60"	10'-6"	5'-6"	16"	1.93	83"	53"	10'-4"	5'-2"	18"	1.65
66"	11'-9"	5'-9"	18"	2.42	91"	58"	11'-6"	5'-5"	18"	1.97
72"	13'-0"	6'-0"	18"	2.77	98"	63"	12'-7"	5'-7"	20"	2.38
78"	14'-3"	6'-3"	20"	3.37	106"	68"	13'-9"	5'-10"	20"	2.69
84"	15'-6"	6'-6"	22"	4.05	113"	72"	14'-9"	6'-0"	22"	3.14
90"	16'-9"	6'-9"	22"	4.51	121"	77"	15'-11"	6'-3"	22"	3.49
96"	18'-0"	7'-0"	24"	5.31	128"	82"	17'-0"	6'-5"	24"	4.04
102"	19'-3"	7'-3"	26"	6.20	136"	87"	18'-2"	6'-8"	24"	4.84
108"	20'-6"	7'-6"	26"	6.78	143"	92"	19'-4"	6'-10"	26"	5.12
114"	21'-9"	7'-9"	28"	7.81	151"	97"	20'-6"	7'-1"	26"	5.42
120"	23'-0"	8'-0"	30"	8.93	166"	106"	22'-7"	7'-5"	28"	6.60
126"	24'-3"	8'-3"	30"	9.57	180"	116"	24'-10"	7'-10"	30"	7.99
132"	25'-6"	8'-6"	32"	10.84	--	--	--	--	--	--
144"	28'-8"	9'-0"	34"	13.00	--	--	--	--	--	--

STATE OF OHIO DEPARTMENT OF TRANSPORTATION

STATE HYDRAULIC ENGINEER

REVISIONS
7/30/07
7/20/12
1/18/13

ROADWAY HYDRAULIC ENGINEER
Matt Cozzoli

OFFICE OF HYDRAULIC ENGINEERING

STANDARD HYDRAULIC CONSTRUCTION DRAWING

HALF-HEIGHT HEADWALLS FOR CONCRETE PIPE

SCD NUMBER
HW-2.2