EXCAVATION METHODS

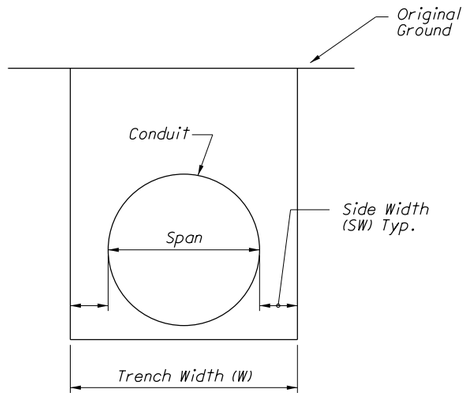

METHOD A-CUT

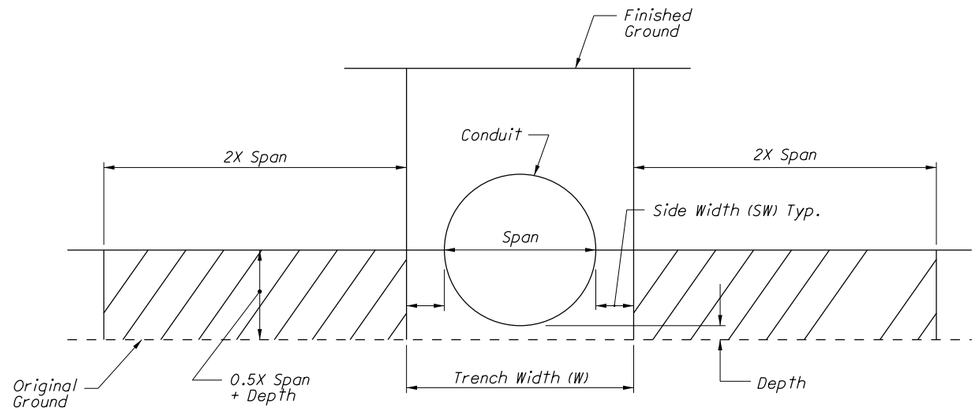

METHOD B-FILL

Minimum Constructed Embankment

TRENCH DIMENSIONS

MATERIAL	SW	WIDTH (W)
Long Span	2'	Span+2(2)
Concrete	0.165 X Span	1.33 X Span
Metal & Plastic	0.5 + 0.125 X Span	1.25 X Span + 1

NOTES

- This drawing is intended for use in conjuction with SS 811 only.
- Use Structural Backfill Type 1, 2, or 3 per CMS 811.
- Use Embankment per SS 811.
- Conduit Span is the horizontal distance from outside wall to outside wall or outside corrugation measured at the widest point of the conduit.
- Conduit Rise is the vertical distance from outside wall to outside wall or outside corrugation measured at the middle of the conduit.
- All dimensions are in feet unless specified.

BEDDING TYPES

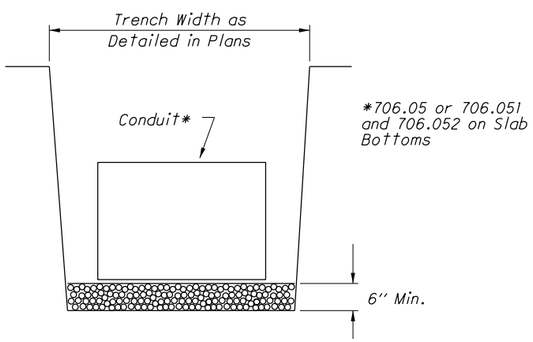

TYPE 1 BEDDING

Structural Backfill

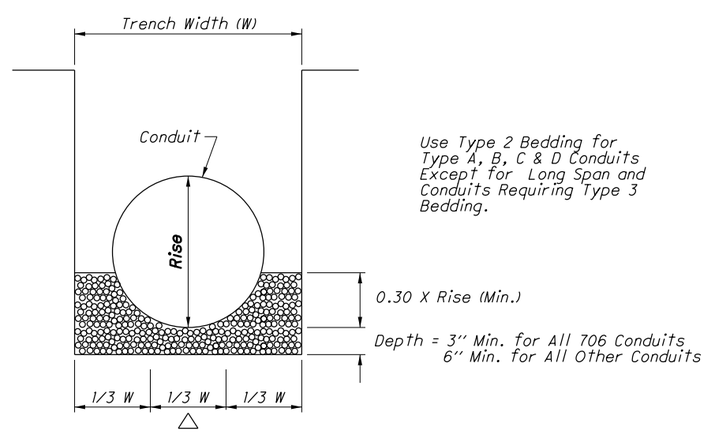

TYPE 2 BEDDING

△ The Middle 1/3 W Under the Conduit Shall Be Uncompacted

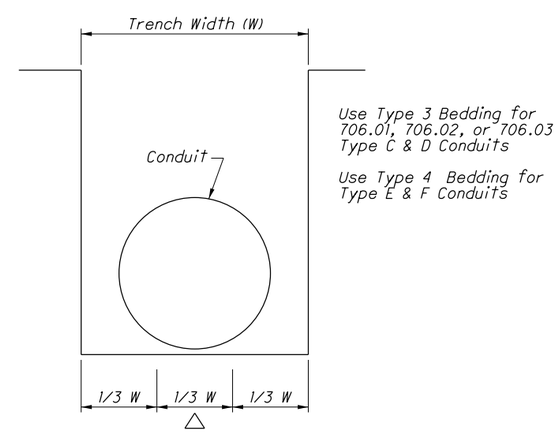

TYPE 3 & 4 BEDDING

△ Scarify and Loosen the Middle 1/3 W Under the Conduit for Type 3 Bedding

STATE OF OHIO DEPARTMENT OF TRANSPORTATION

STATE HYDRAULIC ENGINEER

REVISIONS
7-19-02
1-21-05
4-21-06
7-15-11
1-18-13

ROADWAY HYDRAULIC ENGINEER
Matt Cozzoli

ALL METRIC DIMENSIONS (IN BRACKETS [ ]) ARE IN MILLIMETERS UNLESS OTHERWISE NOTED.

OFFICE OF HYDRAULIC ENGINEERING

STANDARD HYDRAULIC CONSTRUCTION DRAWING

CONDUIT INSTALLATION

SCD NUMBER
DM-1.4

BACKFILL CONDITIONS

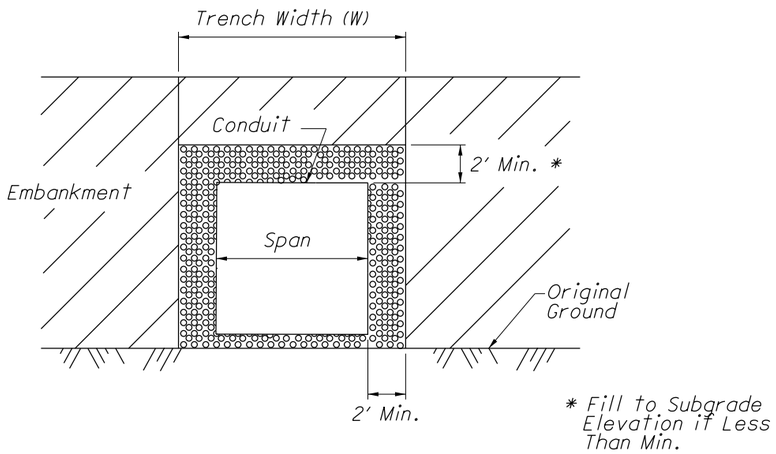

LONG SPAN-FILL

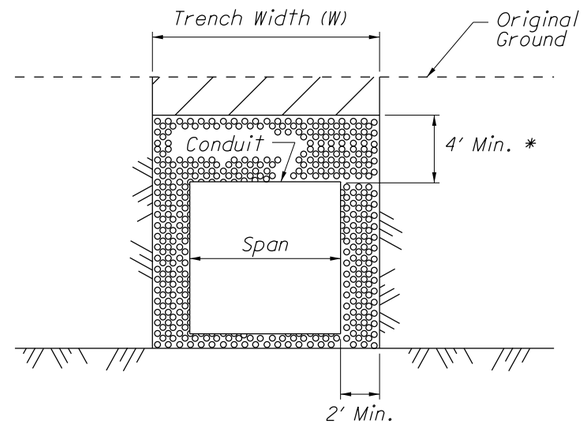

LONG SPAN-CUT

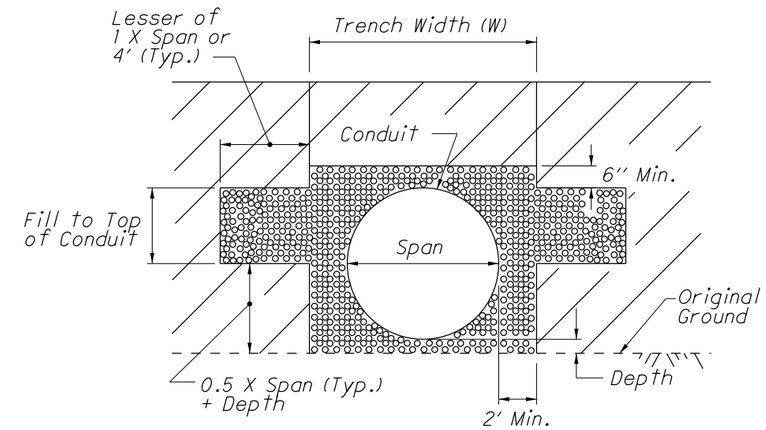

** PLASTIC CONDUIT, TYPE C & D -FILL

** For All Other Type C & D Conduits Place & Compact Backfill on Top of Bedding.

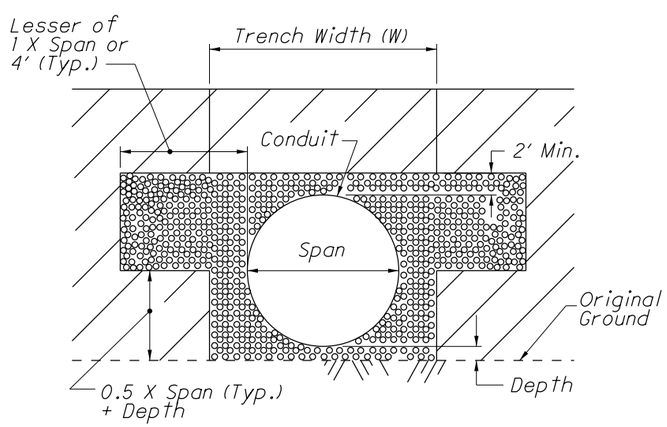

CONDUIT, TYPE A & B-FILL

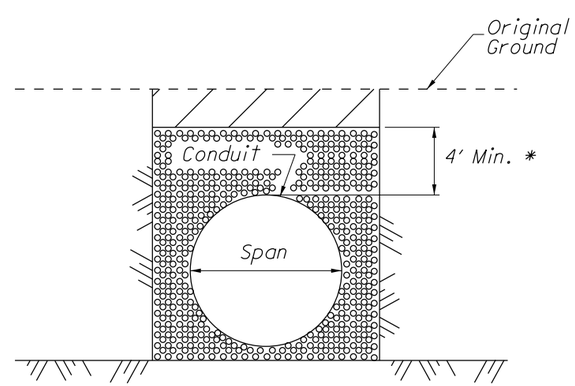

CONDUIT TYPE A & B-CUT

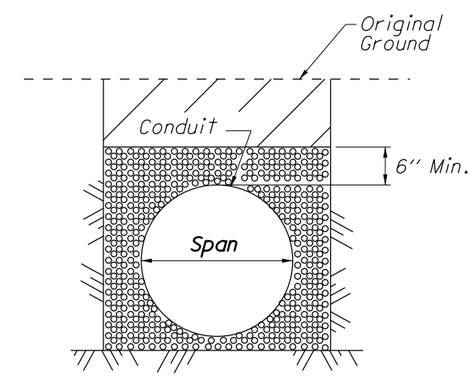

** PLASTIC CONDUIT, TYPE C-CUT

- Construction Embankment

- Structural Backfill

NOTES

Backfill Conduits per SS 811.

STATE OF OHIO DEPARTMENT OF TRANSPORTATION

STATE HYDRAULIC ENGINEER

REVISIONS
7-19-02
1-21-05
4-21-06
7-15-11
1-18-13

ROADWAY HYDRAULIC ENGINEER
Matt Cozzoli

OFFICE OF HYDRAULIC ENGINEERING

STANDARD HYDRAULIC CONSTRUCTION DRAWING
CONDUIT INSTALLATION

SCD NUMBER
DM-1.4