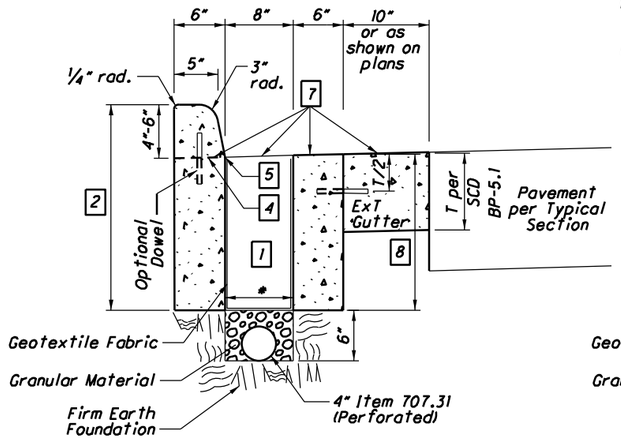

EXFILTRATION TRENCH
TYPE A - Section A-A
Curb and Gutter Application
(NTS)

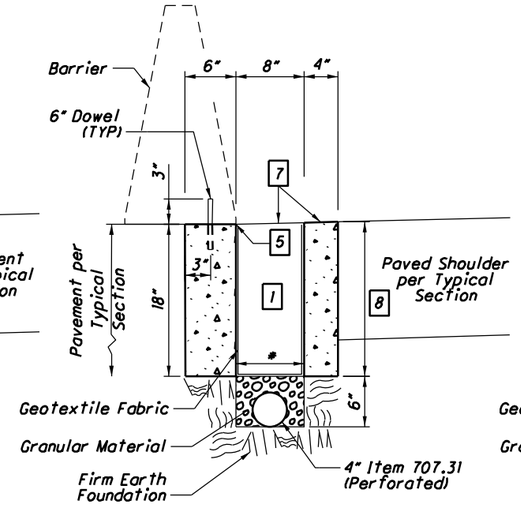

EXFILTRATION TRENCH
TYPE B - Section B-B
Barrier Application
(NTS)

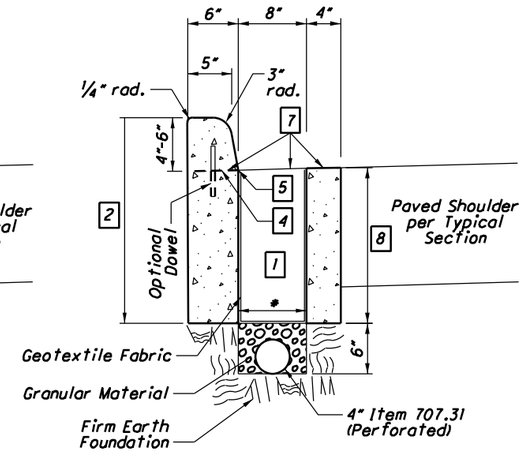

EXFILTRATION TRENCH
TYPE C Section C-C
Various Curb Application
(NTS)

* Bottom dimension may be reduced by up to ½" to assist in form removal during construction

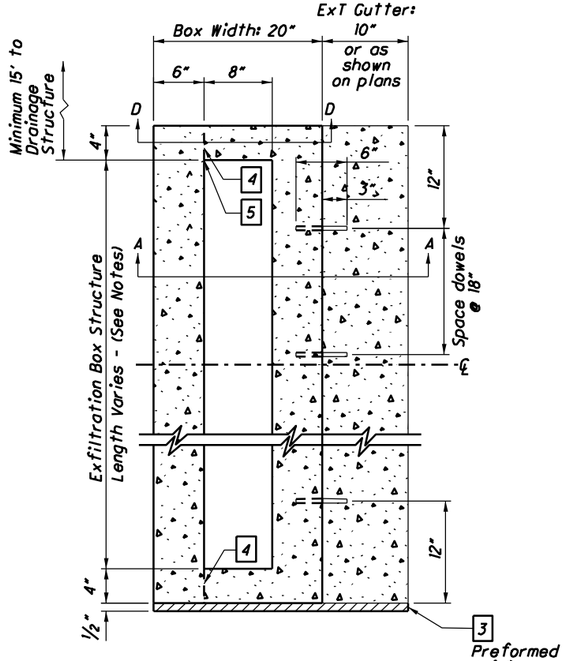

EXFILTRATION TRENCH
TYPE A
Plan View
(NTS)

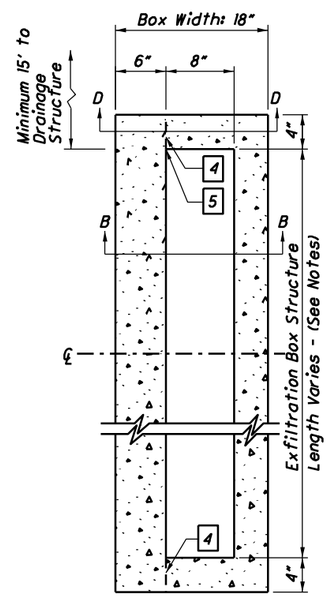

EXFILTRATION TRENCH
TYPE B
Plan View
(NTS)

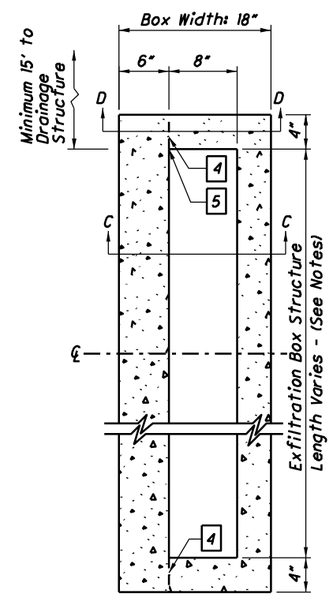

EXFILTRATION TRENCH
TYPE C
Plan View
(NTS)

NOTES

EXFILTRATION TRENCH (ExT): *Locate the exfiltration box structure as shown on the plans.*

The exfiltration box structure may be precast, cast in the field or a combination of precast and cast in the field. The minimum length of a precast exfiltration box structure is 4'. More than 1 precast section may be provided to meet the required length shown in the plans.

Provide concrete conforming to CMS 511 for exfiltration trench base.

If the exfiltration box structure is precast, furnish reinforcing steel conforming to CMS 509.02 and CMS 709.00 for the precast structure in a sufficient amount to permit shipping and placement without damage. Locate all lifting devices on the exterior side walls of the precast structure.

Maintain the cross slope of the pavement as shown on the Standard Construction Drawing or as shown on the plans. Additional variations in dimensions from the Standard Construction Drawing for precast exfiltration box structures may occur. Variances for precast structure dimensions must be approved by the Office of Hydraulics.

Furnish 6" epoxy coated #4 reinforcing bars, conforming to CMS 509.02 and 709.00, to be used as dowels to connect proposed barrier or field cast curb to the top of the precast exfiltration box structure and to connect ExT gutter and exfiltration box structure. Space dowels for curb every 12" on center for the length of the exfiltration box structure. Space dowels for ExT gutter 12" from the ends of the ExT base and every 18" on center for the length of the exfiltration box structure. When dowels are required, drill in place or precast the dowel opening. If dowel openings are drilled, fill with epoxy when placing the dowel. Furnish galvanized inserts for dowels.

Provide concrete conforming to CMS 609 for 12" exfiltration trench gutter for Exfiltration Trench Type A. Cost for the concrete is included in the price of Item 835 - Exfiltration Trench, Type A. Costs for the 4" perforated conduit (Item 707.31), filter media, and exfiltration trench box structure are included in the price of Item 835 - Exfiltration Trench, Type ___. Cost for the curb for ExT, Types A and C is included in the price of Item 835 - Exfiltration Trench, Type ___. Cost for Barrier for ExT, Type B is included with the Barrier.

All materials and labor, including excavation and backfill are paid for at the contract price for ***ITEM 835 - EXFILTRATION TRENCH, TYPE ___.***

1. *Exfiltration Trench Filter Media (See SS835) - Maintain free from debris and sediment laden runoff throughout construction of the project.*
2. *22" for 4" Curb and Gutter and 24" for 6" Curb and Gutter.*
3. *Furnish preformed expansion joint material according to 705.03 when abutting concrete.*
4. *Optional Construction Joint w/ dowels.*
5. *Location for Station and Offset. Elevation according to Typical Section.*
6. *If curb portion is to be cast in field, furnish dowels for the curb as shown for Type A and C. For 4" and 6" curb height, extend the dowels 2" and 3", respectively, above the exfiltration trench base.*
7. *Match the cross slope of the top of the ExT walls, the top of the filter media, and the ExT gutter (if applicable) with the the proposed cross slope of the adjacent pavement or gutter cross slope.*
8. *Determine the front wall dimension of the ExT by using the dimensions at the outside edge of the back wall and the cross slope from 7.*

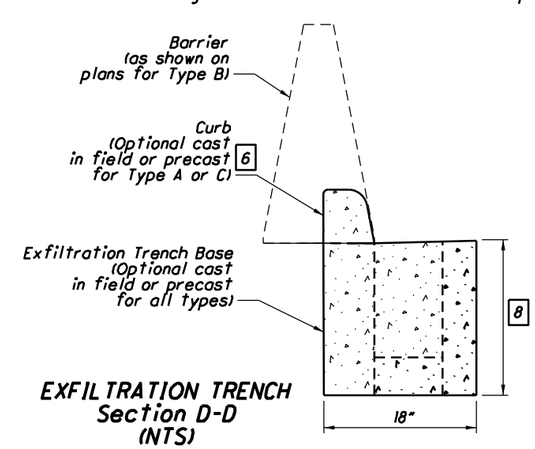

EXFILTRATION TRENCH
Section D-D
(NTS)

STATE OF OHIO DEPARTMENT OF TRANSPORTATION

STATE HYDRAULIC ENGINEER

REVISIONS
1/20/06
4/21/06
10/17/08
7/20/12

ENVIRONMENTAL HYDRAULIC ENGINEER
R. Humphreys

OFFICE OF HYDRAULIC ENGINEERING

STANDARD HYDRAULIC CONSTRUCTION DRAWING
WATER QUALITY - EXFILTRATION TRENCH

SCD NUMBER
WQ-1.3

1 / 1