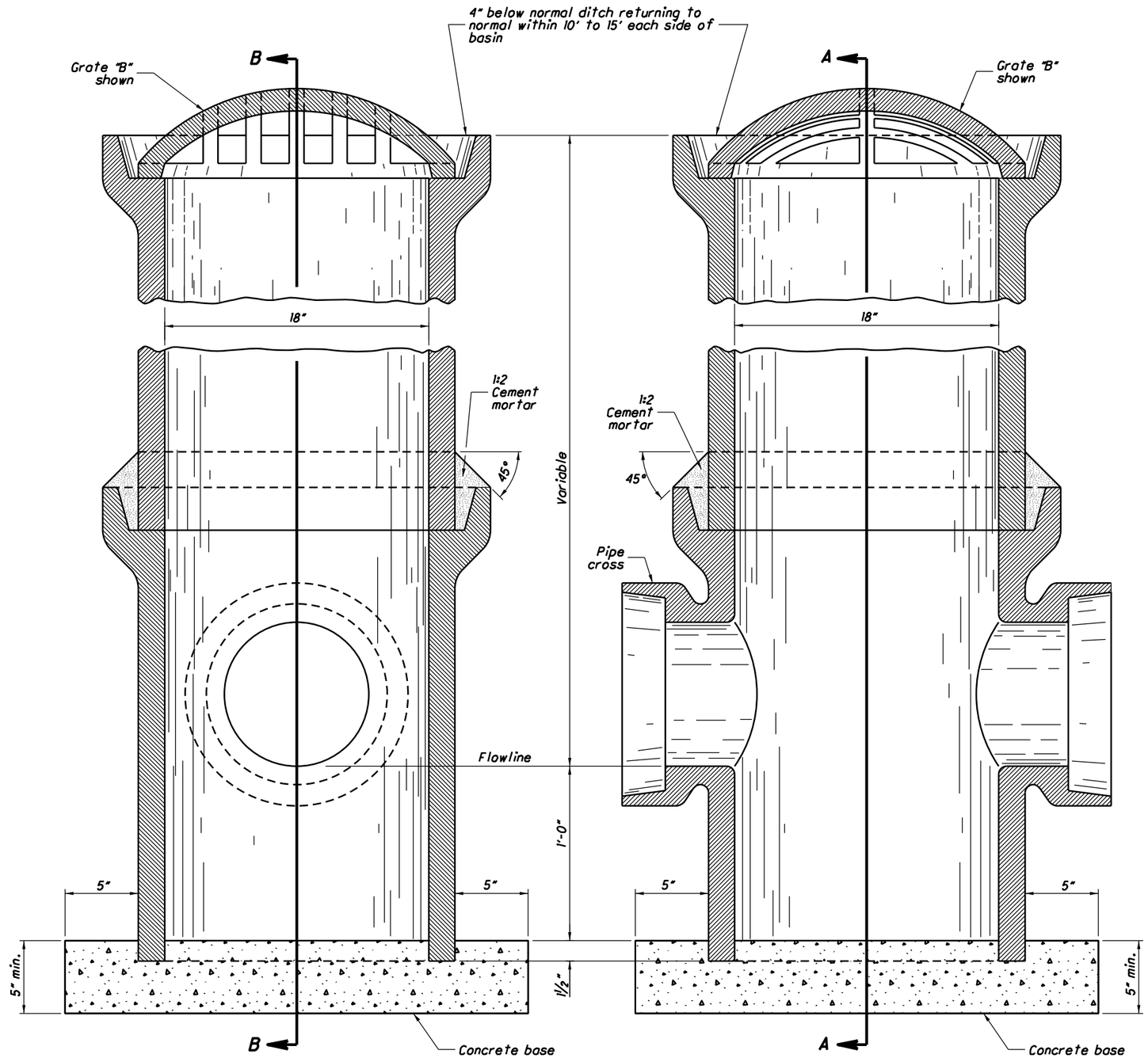

SECTION A-A

SECTION B-B

NOTES

GENERAL: Exercise care to construct the catch basin to the proper grade and in a true vertical position. Do not cut holes inside of pipe.

GRATES: Provide Grate "A" unless the plans specify Grate "B".

Cast the following text into the top of the grate:

"DUMP NO WASTE" and **"DRAINS TO WATERWAY"**

Print text in bold, capital letters at least ½" high. "WATERWAY" may be substituted with "STREAM", "RIVER", "LAKE", etc. Actual placement and logo may vary per manufacturer.

CASTINGS: Meet the requirements of CMS 611. Provide a design essentially the same and equally as strong as the one shown. Minimum weight is 70 lbs. for Grate "A" and 75 lbs. for Grate "B".

Lighter weight grates that meet the requirements of CMS 711.14 may also be provided. Provide grate openings and dimensions as shown here unless otherwise shown in the plans.

PRECAST CONSTRUCTION: Permitted. Meet the concrete requirements of CMS 706.13. Provide sufficient reinforcing to permit shipping and placement without damage.

LOCATION AND ELEVATION: When given on the plans the location is at the center of the grate. The elevation is at the lowest point on the grate.

CONCRETE BASE: Use 4000 psi compressive strength concrete for bases.

CROSS: Where the sewer line is not continuous through a catch basin, plug the upstream opening of the cross properly using a vitrified or concrete stopper and a sealed joint.

RISER AND CROSS: Use standard strength vitrified clay pipe, standard strength non-reinforced concrete pipe having bell and spigot ends, or precast as noted above.

RISER PIPE: Diameter is 18" regardless of size of sewer pipe.

PAYMENT: All materials and labor, including excavation and backfilling, are paid for under **Item 611 - Catch Basin, No. 7.**

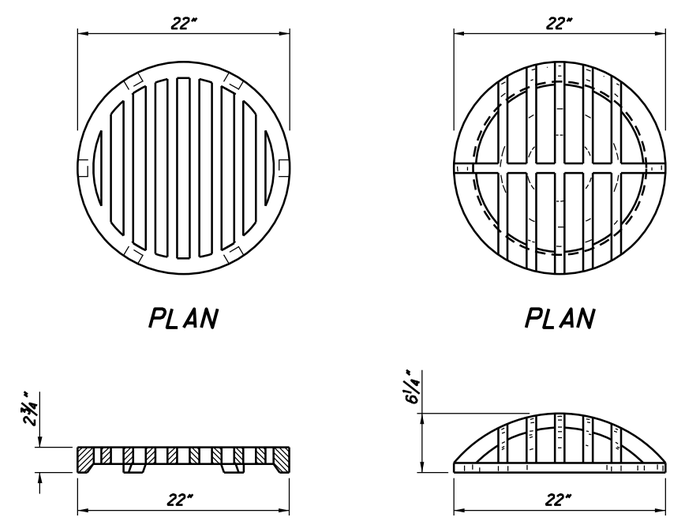

SIDE DITCH CATCH BASIN No. 7

STATE OF OHIO DEPARTMENT OF TRANSPORTATION

STATE HYDRAULIC ENGINEER

REVISIONS
7-20-01
7-19-02
7-20-12
1-18-13

ROADWAY HYDRAULIC ENGINEER
Matt Cozzoli

OFFICE OF HYDRAULIC ENGINEERING

STANDARD HYDRAULIC CONSTRUCTION DRAWING

SIDE DITCH CATCH BASIN No. 7

SCD NUMBER
CB-4.1

1 / 1