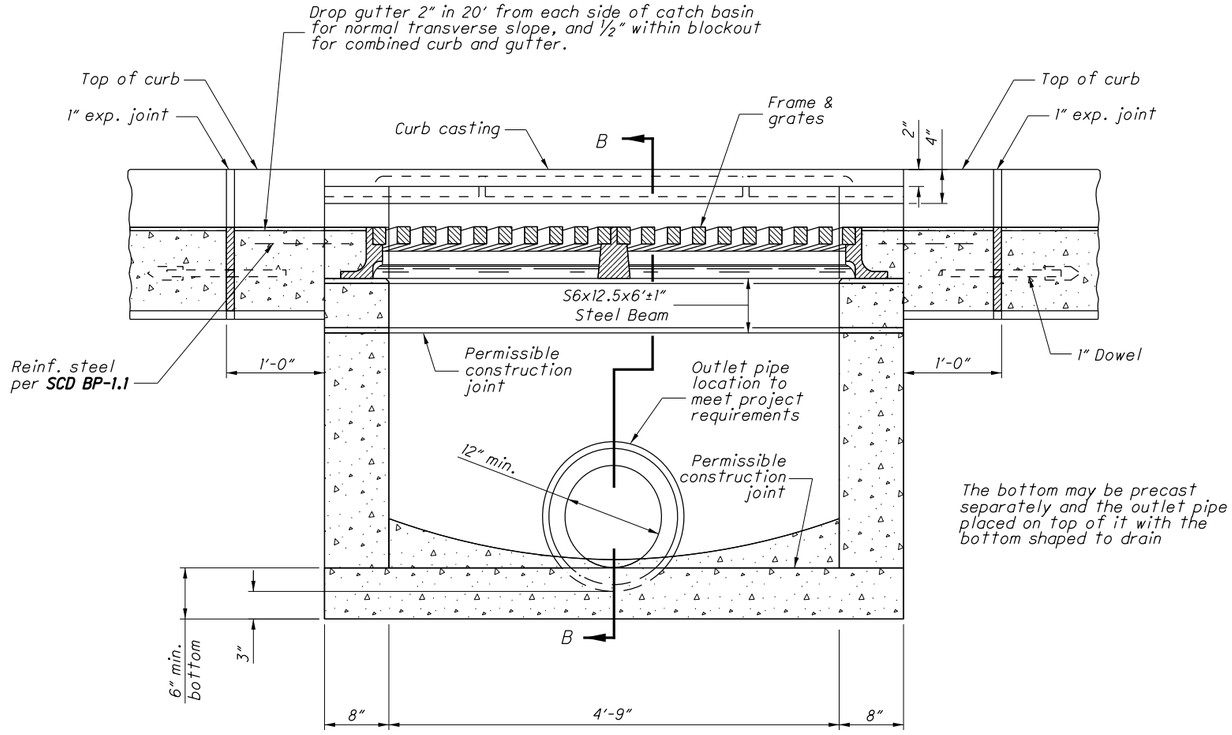

SECTION A-A

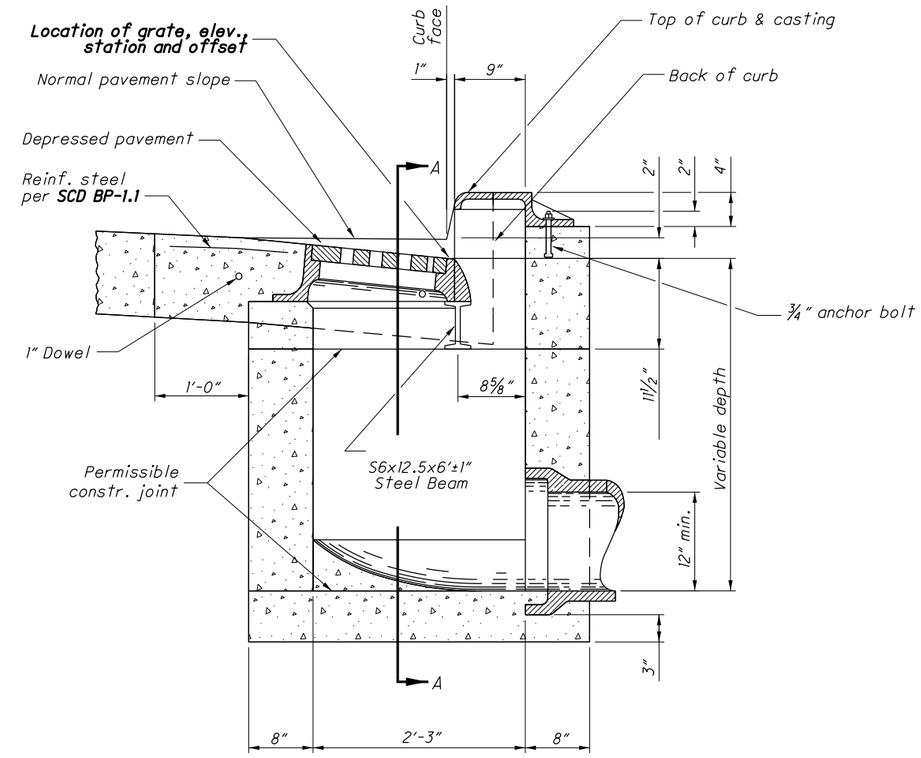

SECTION B-B
WITH CURB
(2" DEPRESSION)

1 Dowel location for curb & gutter

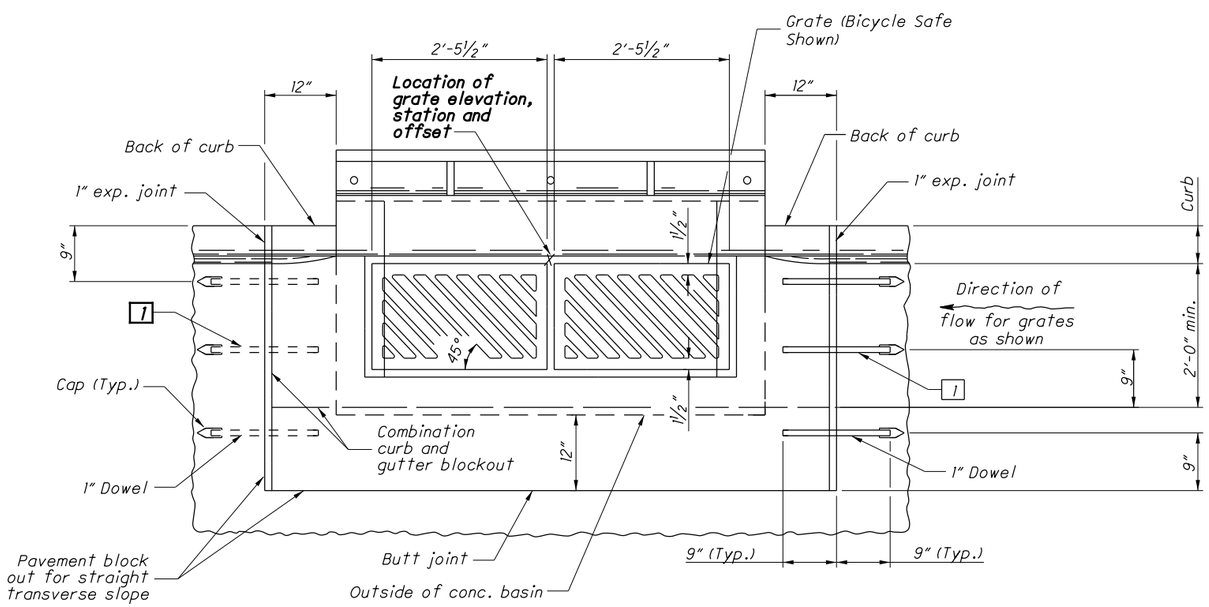

PLAN OF CATCH BASIN AND PAVEMENT JOINTS

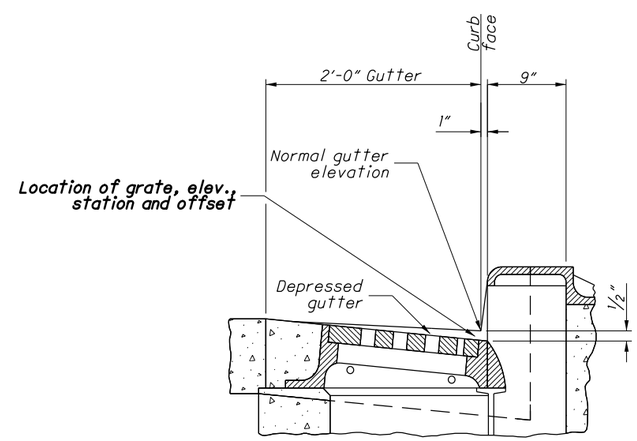

SECTION B-B
WITH CURB & GUTTER
(½" DEPRESSION)

CATCH BASIN No. 3

See Sht. 2/2 for NOTES

STATE OF OHIO DEPARTMENT OF TRANSPORTATION

STATE HYDRAULIC ENGINEER

REVISIONS
7-20-01
7-19-02
7-15-05
7-20-12
1-18-13

ROADWAY HYDRAULIC ENGINEER
Matt Cozzoli

OFFICE OF HYDRAULIC ENGINEERING

STANDARD HYDRAULIC CONSTRUCTION DRAWING

CATCH BASIN NO. 3

SCD NUMBER
CB-2.1

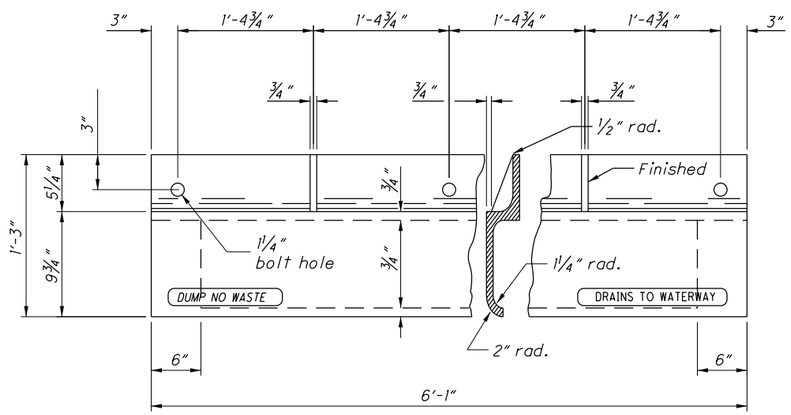

PLAN & SECTION

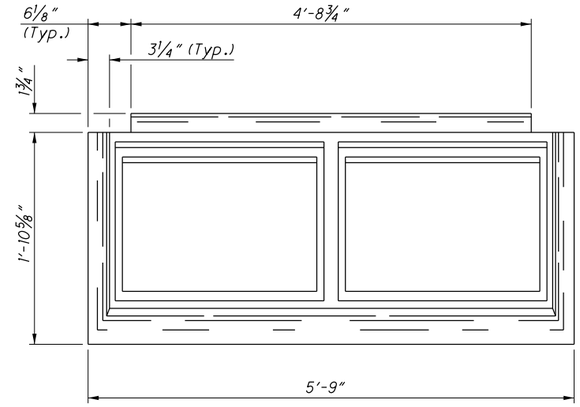

PLAN

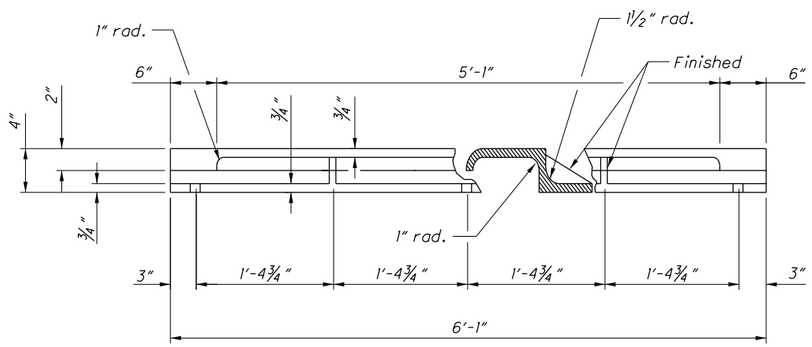

FRONT VIEW & SECTION

CURB CASTING

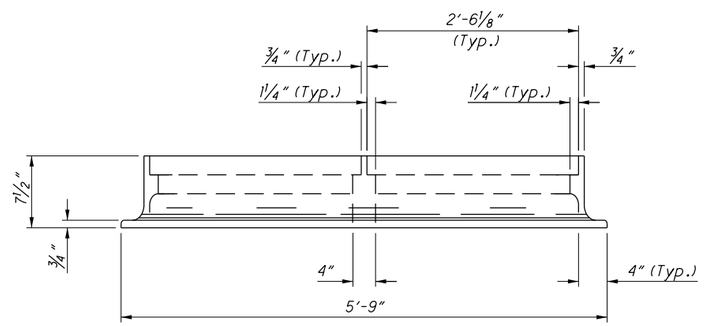

FRONT VIEW

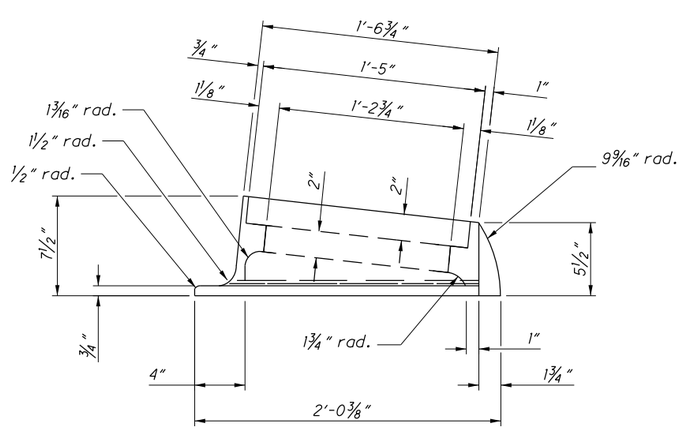

END VIEW FRAME

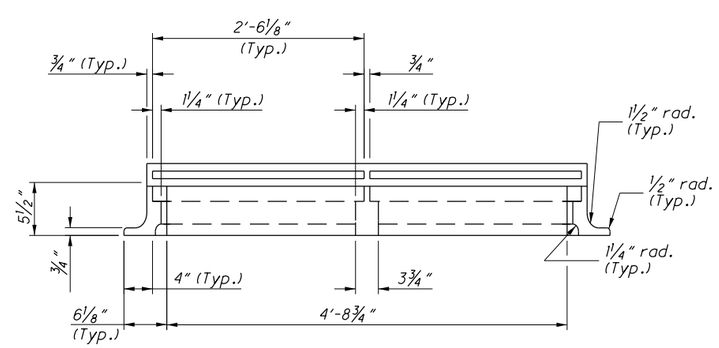

BACK VIEW

FRAME

NOTES

GRATES: Two required. For details, see **SCD CB-2.2.** Provide Grate "V" unless the plans specifically require the diagonal grate. If the diagonal grate is specified, place it so that the diagonal bars direct drainage flow toward the curb.

CASTINGS: Provide a design essentially the same and equally as strong as the one shown. Minimum weight:

Curb Casting . . . . . 305 lbs.
Two Grates . . . . . 254 lbs.
Frame . . . . . 590 lbs.
Two Grate "V" . . . . 210 lbs.

Lighter weight frames and grates that meet the requirements of CMS 711.14 may also be provided. Provide grate openings and dimensions as shown here unless otherwise shown in the plans.

Cast the following text into the top of the curb casting:

"DUMP NO WASTE" and **"DRAINS TO WATERWAY"**

Print text in bold, capital letters at least ¾" high. See example on Plan & Section. "WATERWAY" may be substituted with "STREAM", "RIVER", "LAKE", etc. Actual placement and logo may vary per manufacturer.

BEARING AREAS: Fit and finish the frame and grate to provide a firm and even seat. No projections are permitted on bearing areas, and the grate must seat in its frame without rocking.

WALLS: When used in place of concrete, construct brick side walls with 8" nominal thickness.

PRECAST CONSTRUCTION: Permitted, except for the apron. Meet CMS 706.13 concrete requirements. Provide precast walls at least 6" thick with sufficient reinforcing to permit shipping and placement without damage. Reduce the wall thickness from the outside.

MINIMUM DEPTH: The minimum depth is per the cover requirements for that pipe type.

OPENINGS: Obtain the Engineer's approval for any pipe openings greater than 4" from the outside of the pipe to the structure. Fill all voids per CMS 611.

DOWELS: Furnish four 1"x18" dowels for concrete pavement or gutter blockout. See **SCD BP-2.2** for dowel details.

BLOCKOUT: Pave blockouts with 4000 psi compressive strength concrete in PCC pavement or gutter. Blockouts are paid for as part of the pavement or gutter with no deduction in pavement, curb or gutter quantities because of the castings. Cast a 4000 psi compressive strength concrete apron, the size of the 2'-0" gutter blockout, in place in asphalt pavement (no dowels required) with the cost included in the catch basin bid price. No deduction is made in curb quantities.

PAYMENT: All materials and labor, including excavation and backfilling, are paid for under **Item 611 - Catch Basin, No. 3.**

STATE OF OHIO DEPARTMENT OF TRANSPORTATION

STATE HYDRAULIC ENGINEER

REVISIONS
7-20-01
7-19-02
7-15-05
7-20-12
1-18-13

ROADWAY HYDRAULIC ENGINEER
Matt Cozzoli

OFFICE OF HYDRAULIC ENGINEERING

STANDARD HYDRAULIC CONSTRUCTION DRAWING

CATCH BASIN NO. 3

SCD NUMBER
CB-2.1