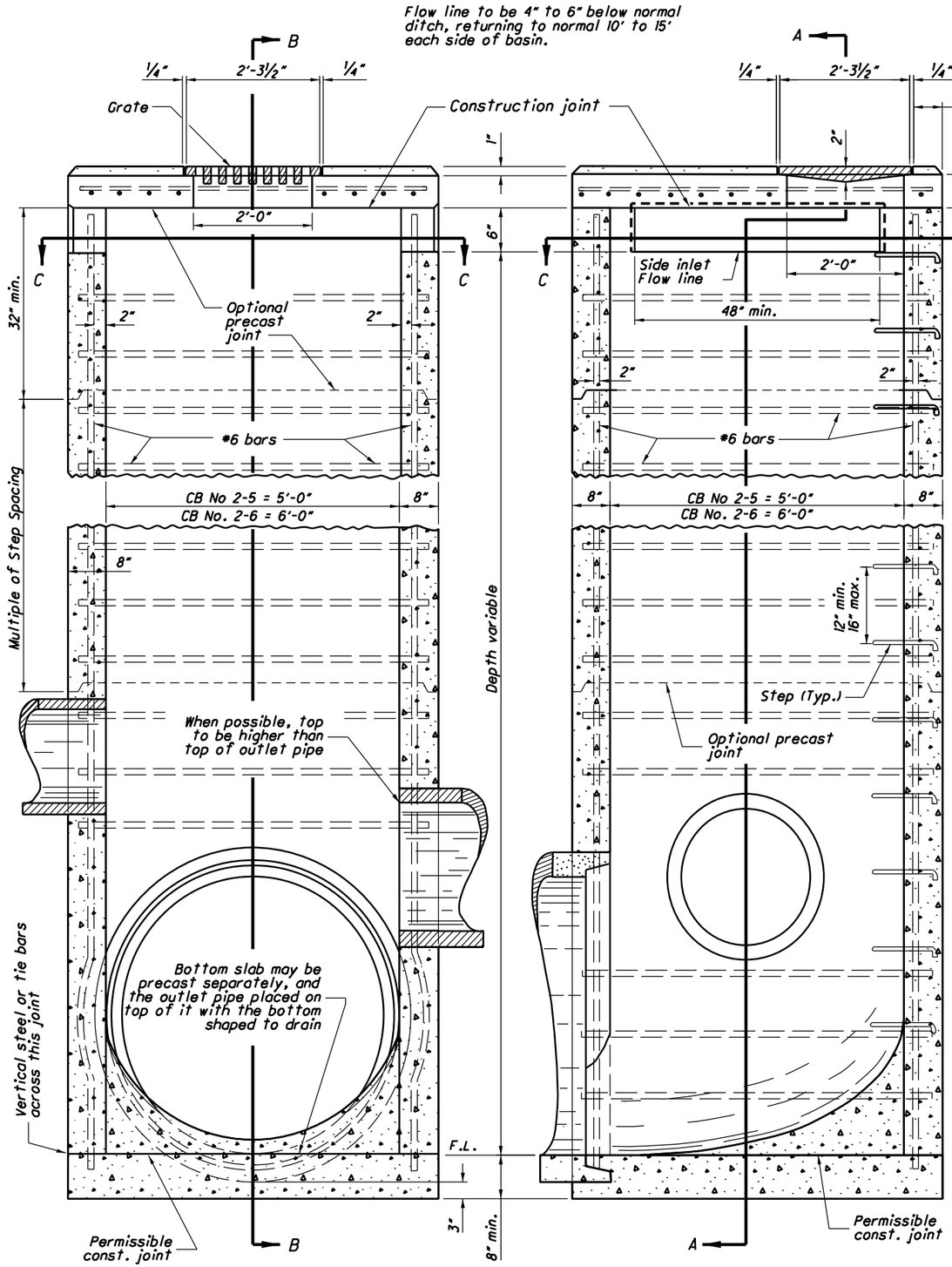


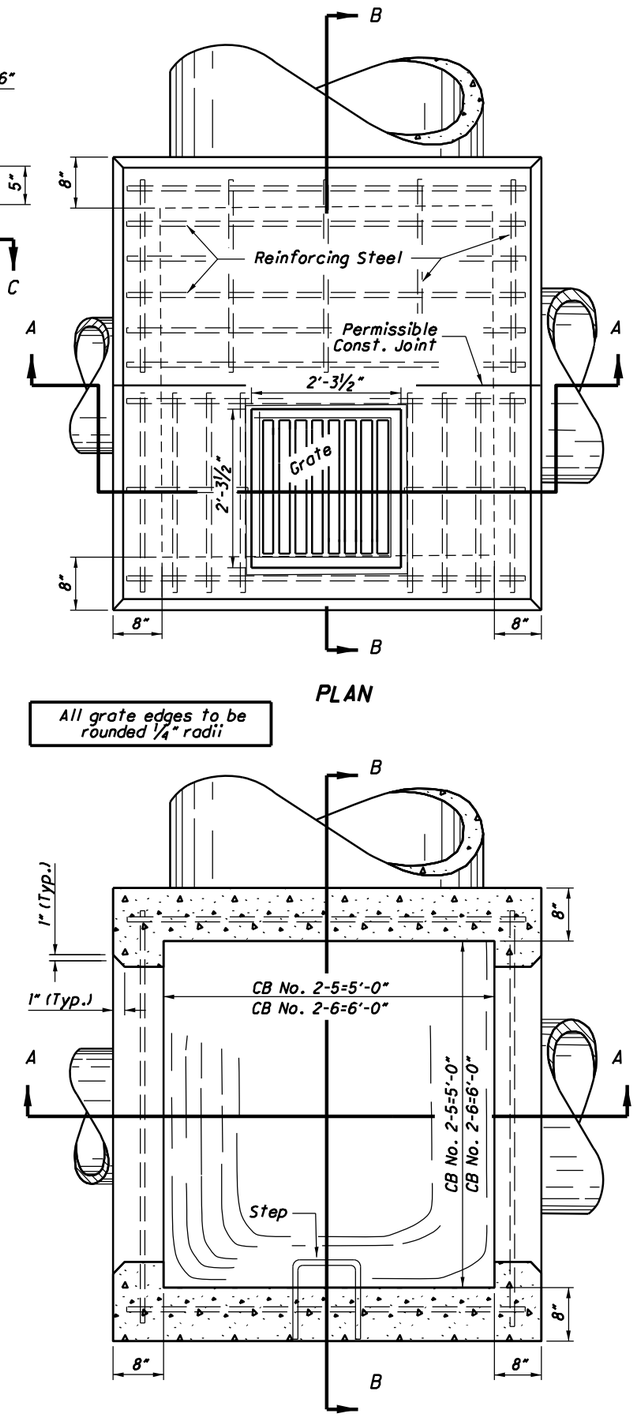


CATCH BASINS No. 2-5 & No. 2-6

## NOTES

**GRATE:** See details on **SCD CB-1.1.** Minimum weight of grate: 120 lbs., or meets the requirements of CMS 711.14. Provide grate openings and dimensions as shown here unless otherwise shown in the plans.

If necessary, bicycle safe grates will be specified in the plans. Furnish Neenah No. R-4859-C or East Jordan No. 5110 Type M3 bicycle safe grates or approved equals.

Cast the following text into the top of the grate:

**"DUMP NO WASTE"** and **"DRAINS TO WATERWAY"**

Print text in bold, capital letters at least 1/2" high. "WATERWAY" may be substituted with "STREAM", "RIVER", "LAKE", etc. Actual placement and logo may vary per manufacturer.

**WALLS:** Construct reinforced concrete walls 8" thick, as shown. Construct brick walls used in place of reinforced concrete with a nominal thickness of 12". Provide precast walls at least 6" thick with sufficient reinforcing to permit shipping and handling without damage and at least equivalent to reinforced cast-in-place construction.

**STEPS:** Provide steps where the depth exceeds 6'. Meet the requirements of **SCD MH-1.1.**

**CONCRETE:** Use 4000 psi compressive strength for Cast-in-place concrete. Meet the requirements of CMS 706.13 for all precast concrete and mark with the catch basin number.

**REINFORCEMENT:** Provide #6 bars spaced 6" center to center and #6 tie bars spaced as shown for top reinforcing. Main bars to clear bottom of slab by 1 1/4". Side wall to be reinforced with #6 bars horizontal in each side, 6' long for CB No. 2-5 and 7' long for CB 2-6, spaced at 1' center to center, and #6 bars in each corner length equals depth plus 1'.

**PRECAST BASE:** If a precast base is used, set it deep enough so that the top can be placed on the base to provide the grate elevation specified in the plans. Do not use brick layers to adjust the top elevation.

**LOCATION AND ELEVATION:** When given on the plans, the location and the elevation are at the top center of the grate. When side openings are provided, the elevation is at the flow line of the side inlet.

**MINIMUM DEPTH:** The minimum depth of CB No. 2-5 and CB No. 2-6 is the outside diameter (O.D.) of the outlet pipe plus 7".

**OPENINGS:** Obtain the Engineer's approval for any pipe openings greater than 4" from the outside of the pipe to the structure. Fill all voids per CMS 611.

**SIDE INLETS:** Provide inlets on both sides of the No. 2-5 and 2-6 catch basin in sags and on upstream side only where the ditch has a continuous down grade past the catch basin. Do not use catch basins with side inlets within the Clear Zone.

**PAYMENT:** All materials and labor, including excavation and backfilling, are paid for under **Item 611 - Catch Basin, No. 2-5 or Item 611 - Catch Basin, No. 2-6.**

| CATCH BASIN | OUTLET PIPE SIZE |
|---|---|
| 2-5 | 48" to 54" |
| 2-6 | 60" to 72" |

STATE OF OHIO DEPARTMENT OF TRANSPORTATION

STATE HYDRAULIC ENGINEER

REVISIONS
7-20-01
7-19-02
7-15-05
7-20-12
1-18-13

ROADWAY HYDRAULIC ENGINEER
Matt Cozzoli

OFFICE OF HYDRAULIC ENGINEERING

STANDARD HYDRAULIC CONSTRUCTION DRAWING

CATCH BASINS No's 2-5 & 2-6

SCD NUMBER
CB-1.3

1/1