NON-EXCELSIOR EROSION CONTROL MAT INSTALLATION

(FOR EXCELSIOR EROSION CONTROL MATS, SEE BELOW)

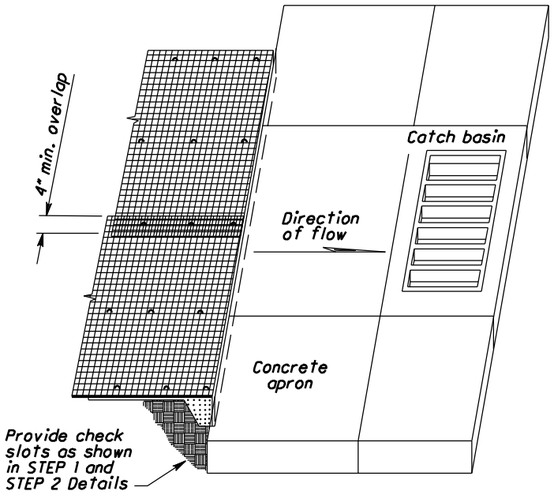

CHECK SLOT AT STRUCTURES

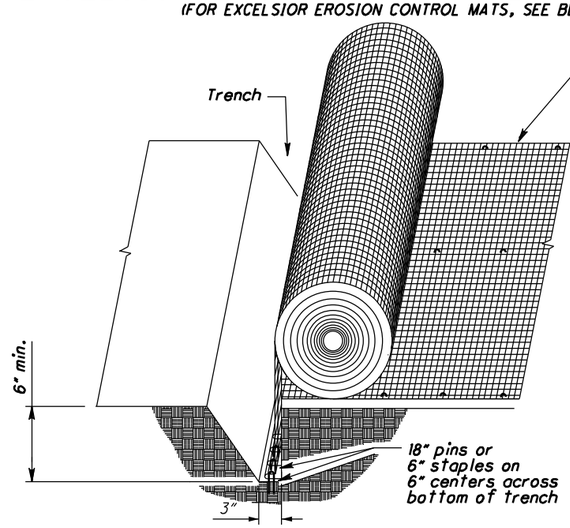

STEP 1

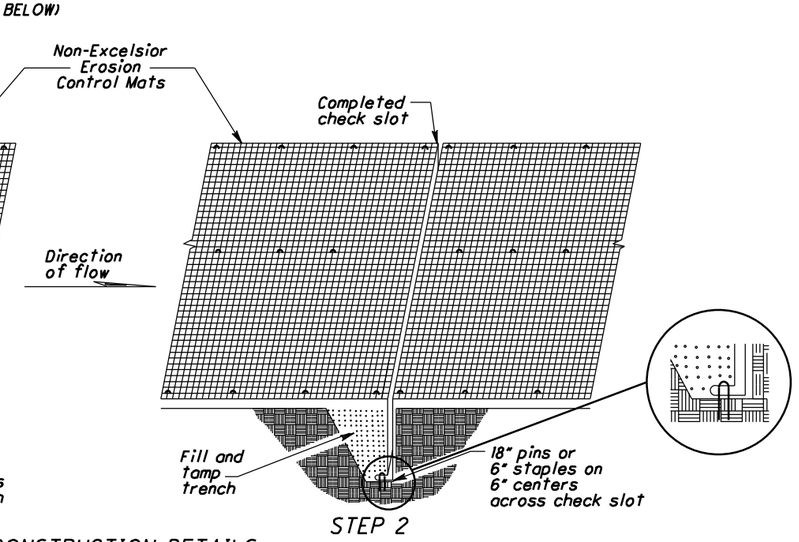

STEP 2

CHECK SLOT CONSTRUCTION DETAILS

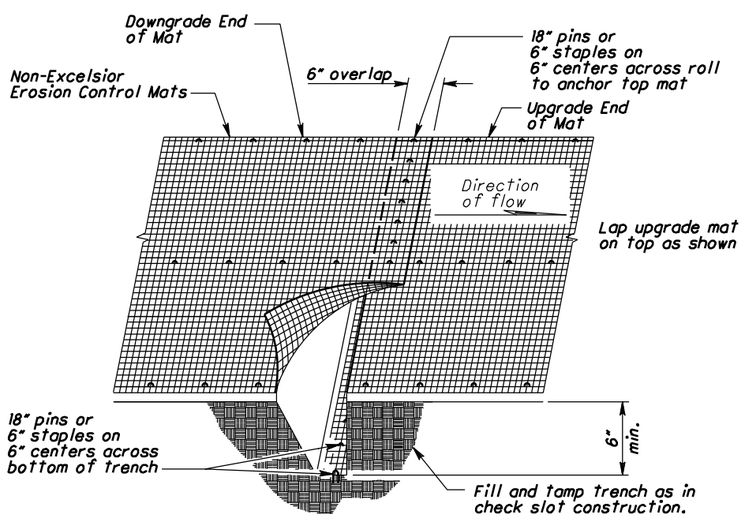

END OF ROLL OVERLAP

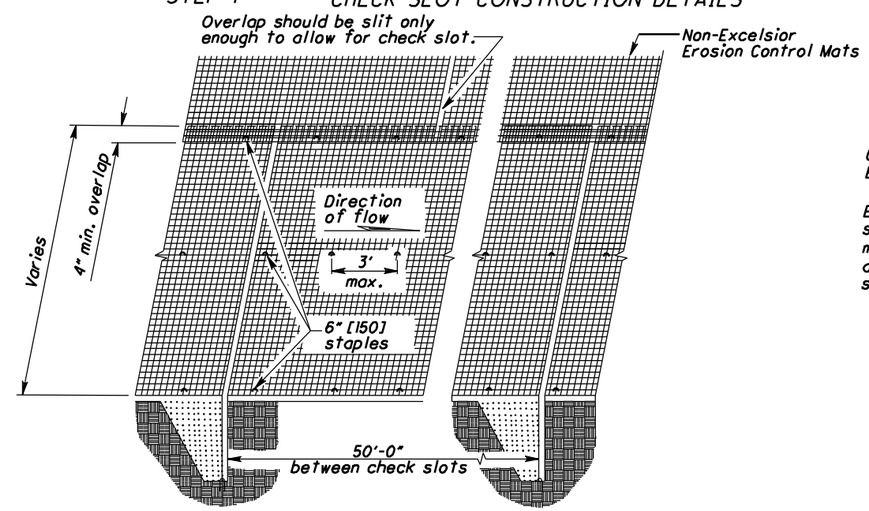

TYPICAL INSTALLATION

NOTES

GENERAL: The details shown govern the installation of Erosion Control Mats unless otherwise shown in the plan.

END OF RUN: Use a check slot and staple or pin in the slot as shown in END OF ROLL OVERLAP Detail for all mats excluding excelsior mats. When placing matting for all ditch protection, start at the downstream end, as shown in the CHECK SLOT AT STRUCTURES Detail.

EXCELSIOR EROSION CONTROL MAT INSTALLATION

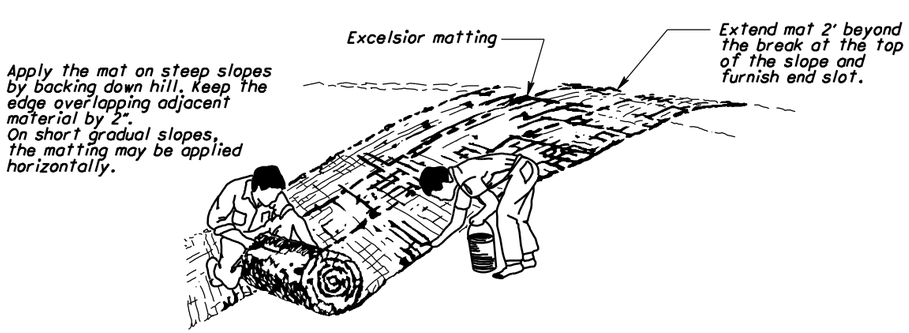

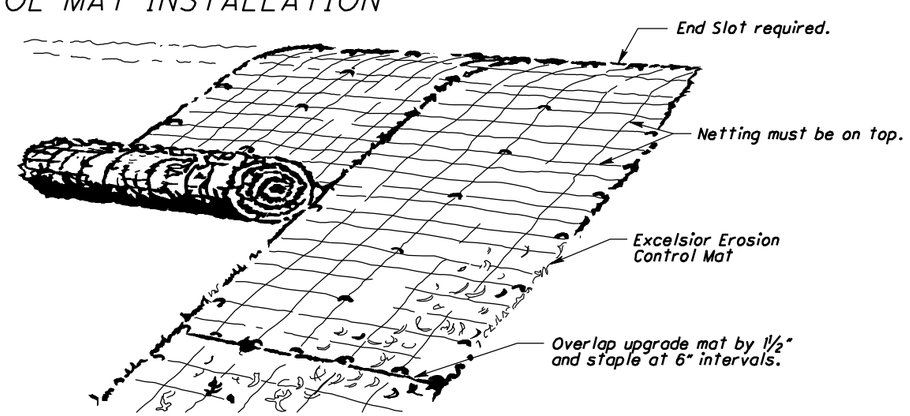

STATE OF OHIO DEPARTMENT OF TRANSPORTATION

STATE HYDRAULIC ENGINEER

REVISIONS
7-20-01
7-19-02
1-21-05
7-20-12

ROADWAY HYDRAULIC ENGINEER
Matt Cozzoli

OFFICE OF HYDRAULIC ENGINEERING

STANDARD HYDRAULIC CONSTRUCTION DRAWING

EROSION CONTROL MAT

SCD NUMBER
DM-4.2

1/1