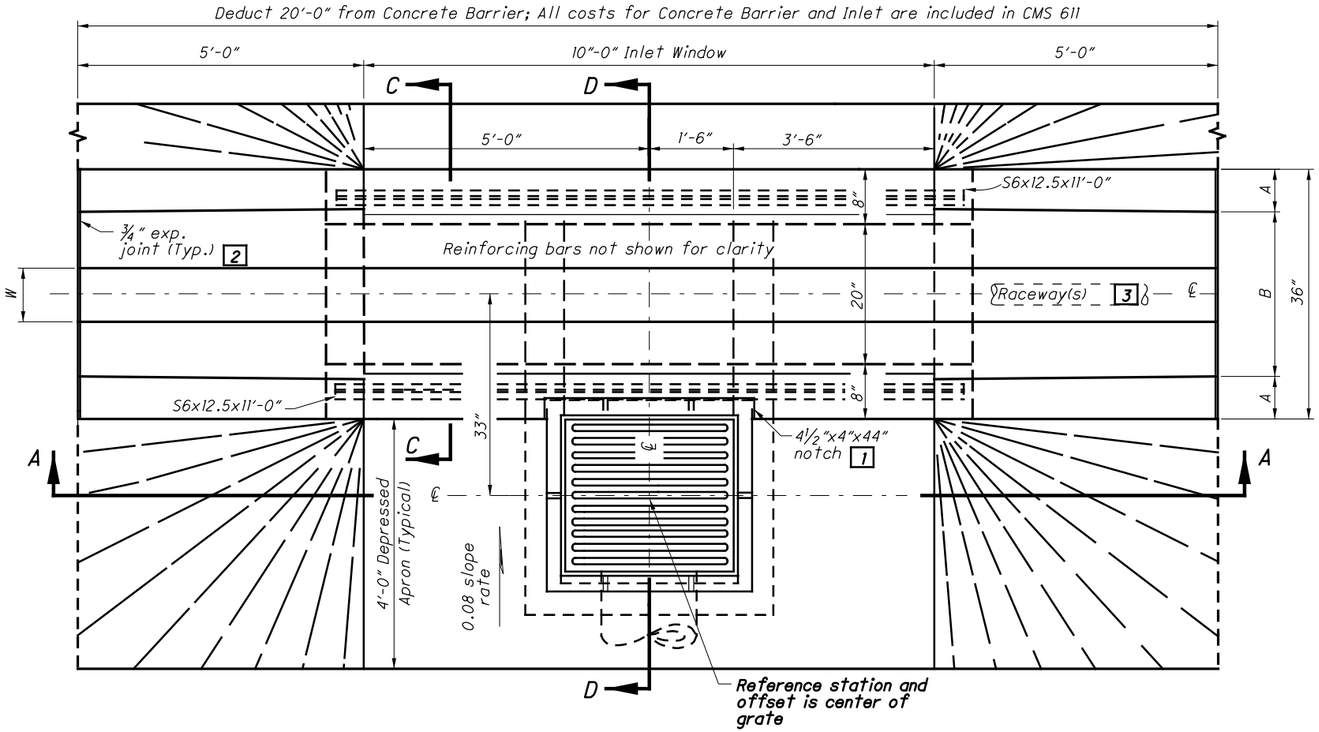

PLAN VIEW

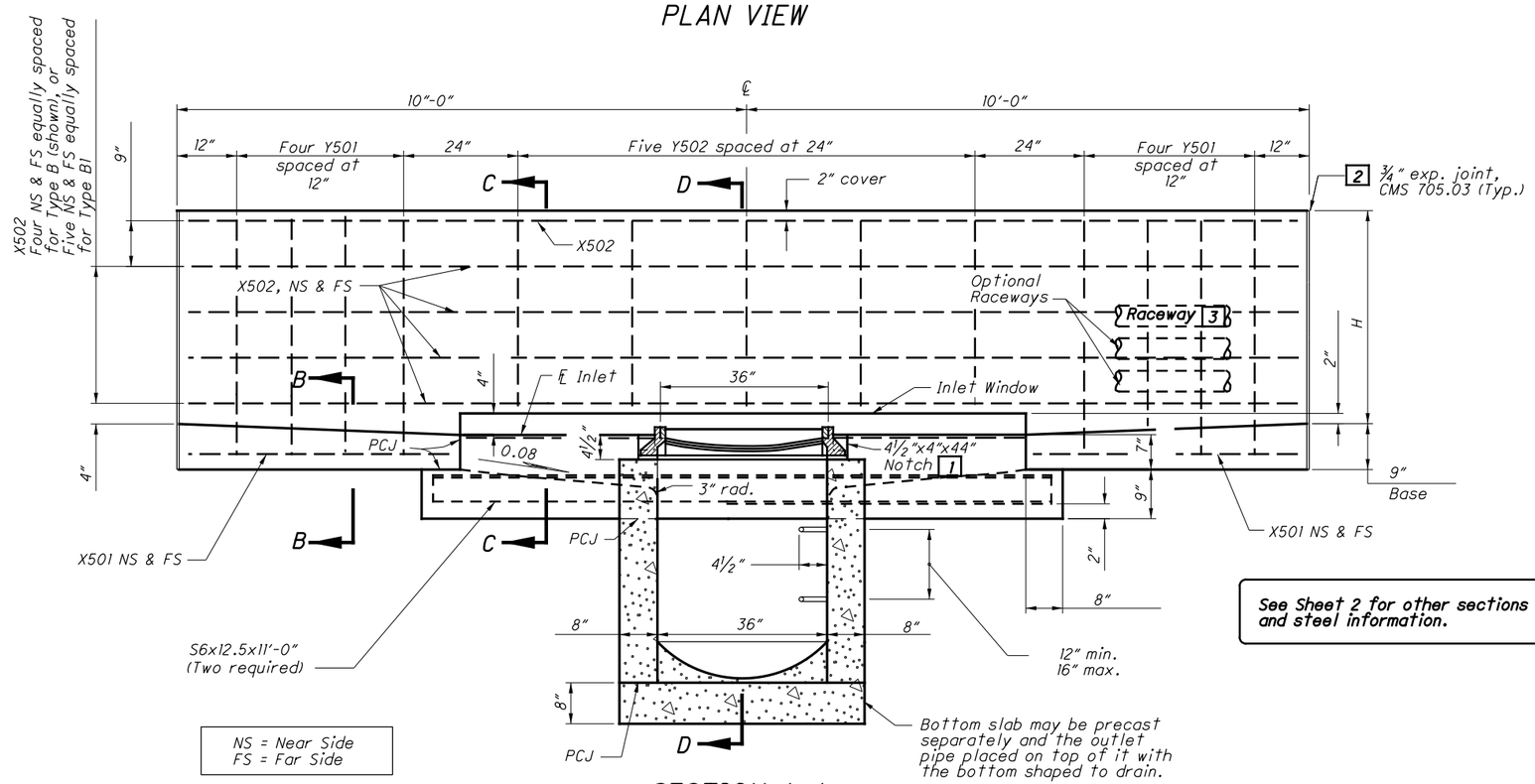

SECTION A-A

NS = Near Side
FS = Far Side

See Sheet 2 for other sections and steel information.

NOTES

GENERAL: For details of Single Slope Concrete Barriers, see SCD RM-4.3.

WALLS: The walls between the bottom slab and the upper permissible construction joint may be built of brick, concrete block or cast-in-place concrete, 8" nominal thickness for depths of 12' or less. Precast walls have a minimum thickness of 6" and are reinforced sufficiently to permit shipping and handling without damage. The unit above the upper permissible construction joint may be precast or cast-in-place.

CONCRETE: Provide 4000 psi compressive strength concrete for cast-in-place structures. When precast, provide concrete that meets the requirements of CMS 706.13. Mark the inlet number on the structure. Seal the exposed concrete surfaces of the barrier per Item 512 when specified in the plans.

REINFORCING STEEL: Provide epoxy coated reinforcing steel in accordance with CMS 509.09.

CASTINGS: Minimum weight of frame and cover is 540 lbs. See Sheet 2 for CASTING DETAILS.

Lighter weight frames and grates that meet the requirements of CMS 711.14 may also be provided. Grate openings and dimensions may not differ from those shown unless otherwise shown in the plans.

STEPS: Provide steps in accordance with SCD MH-1.1.

INLETS OVER 12 FEET IN DEPTH: Precast or cast-in-place inlets over 12 feet in depth. Reinforce with #5 bars on 12" centers both vertically and horizontally with 2" clearance from the inside wall face.

OPENINGS: Pipe openings are the outside diameter of the pipe being supplied plus 2" when fabricated or field cut. Fill any voids per CMS 601.

PCJ: Permissible construction joint.

PAYMENT: Payment will be made at the unit price bid per Each for Item 611 - Inlet, No. 3 for Single Slope Barrier, Type ____ (B or B1) and includes all materials, reinforcing steel, castings, raceways, wiring and labor required to construct the inlet as shown. Sealing of exposed concrete and sealing of the barrier will be paid for under Item 512 when specified in the plans.

LEGEND

1. After casting is placed, fill notch with 4000 psi compressive strength concrete.
2. Provide a 1½" minimum expansion joint in concrete pavement or concrete shoulders.
3. 4" electrical raceway for Types B & B1. See Sheet 2 for RACEWAY PLACEMENT Details.

STANDARD INLET TYPES

INLET NO. 3	W	H	A	B
Type B	12"	42"	4"	28"
Type B1	12"	57"	1⅛"	33¾"

STATE OF OHIO DEPARTMENT OF TRANSPORTATION

STATE HYDRAULIC ENGINEER

REVISIONS
7-16-04
7-15-05
10-21-11
7-20-12
1-18-13

ROADWAY HYDRAULIC ENGINEER
Matt Cozzoli

OFFICE OF HYDRAULIC ENGINEERING

STANDARD HYDRAULIC CONSTRUCTION DRAWING

INLET No. 3 FOR SINGLE SLOPE BARRIER, TYPES B & B1

SCD NUMBER
I-2.1

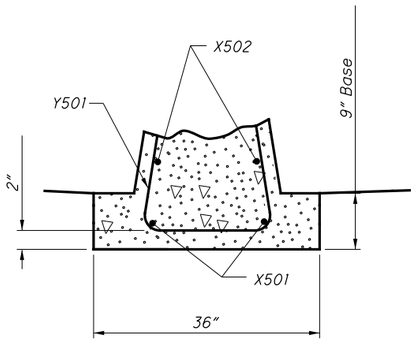

PARTIAL SECTION B-B

See Sheet 1

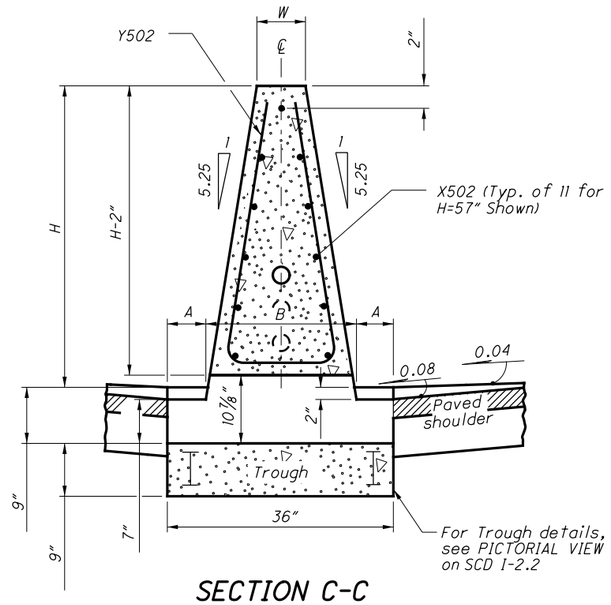

SECTION C-C

See Standard Inlet Types on first sheet for dimensions A, B. H and W.

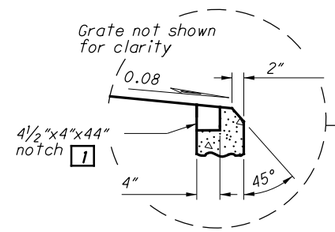

ALTERNATE SPILLWAY DETAIL

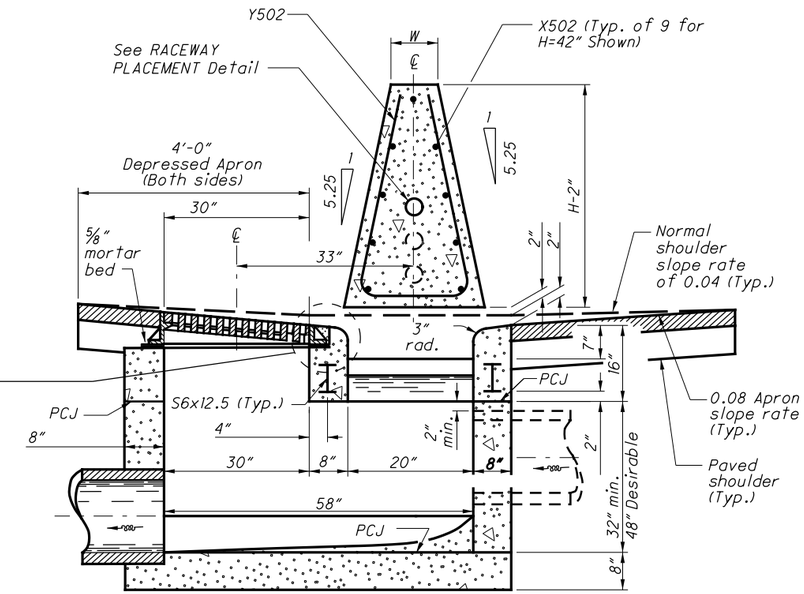

SECTION D-D

See Sheet 1

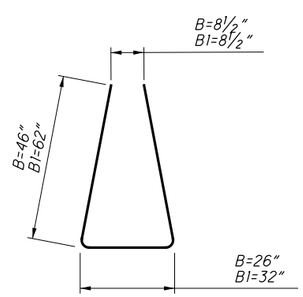

Y501

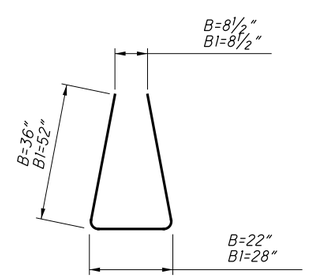

Y502

BENDING DIAGRAMS

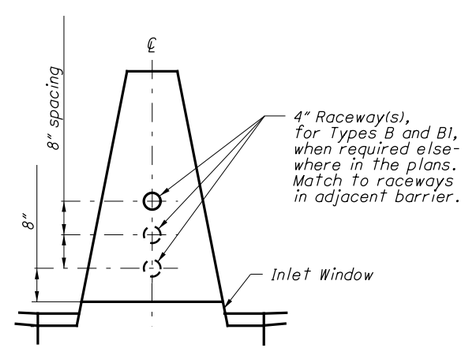

RACEWAY PLACEMENT

(Over Inlet Window)

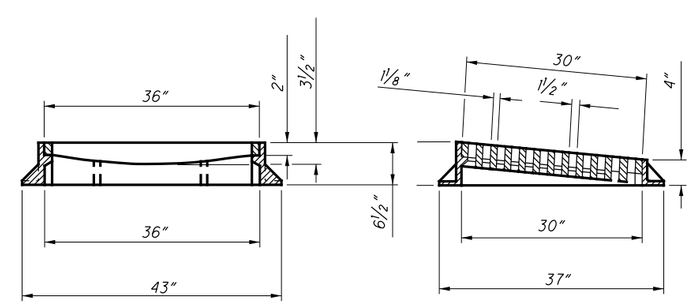

CASTING DETAILS

STEEL LIST (For Estimating Purposes Only)										
INLET NO. 3	X501 #5 Straight		X502 #5 Straight		Y501 #5 Bent		Y502 #5 Bent		S6x12.5	
	No.	Length	No.	Length	No.	Length	No.	Length	No.	Length
Type B	4	4'-8"	9	19'-8"	8	9'-9"	5	7'-9"	2	11'-0"
Type B1	4	4'-8"	11	19'-8"	8	12'-9"	5	10'-9"	2	11'-0"

For Standard Inlet Types, NOTES, LEGEND, Plan and Section A-A, see Sheet 1.

STATE OF OHIO DEPARTMENT OF TRANSPORTATION

STATE HYDRAULIC ENGINEER

REVISIONS
7-16-04
7-15-05
10-21-11
7-20-12
1-18-13

ROADWAY HYDRAULIC ENGINEER
Matt Cozzoli

OFFICE OF HYDRAULIC ENGINEERING

STANDARD HYDRAULIC CONSTRUCTION DRAWING

INLET No. 3 FOR SINGLE SLOPE BARRIER, TYPES B & B1

SCD NUMBER
I-2.1