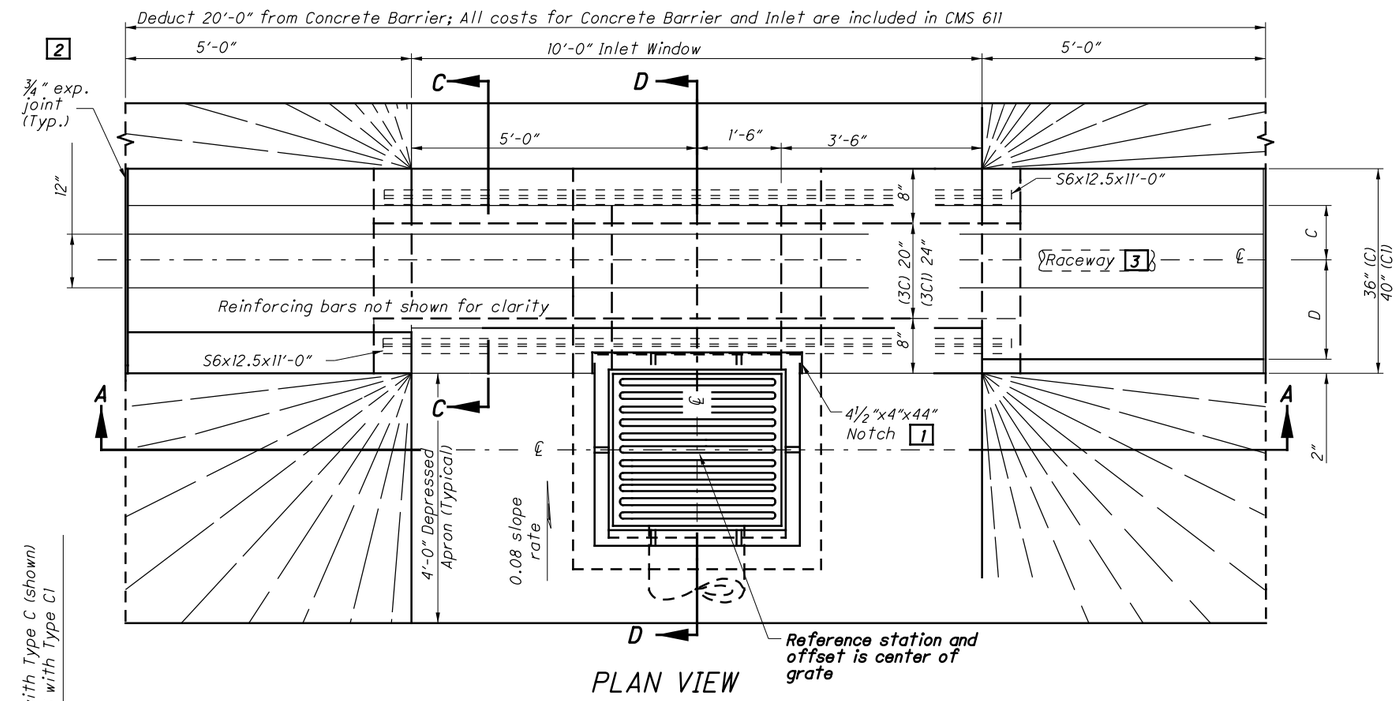

PLAN VIEW

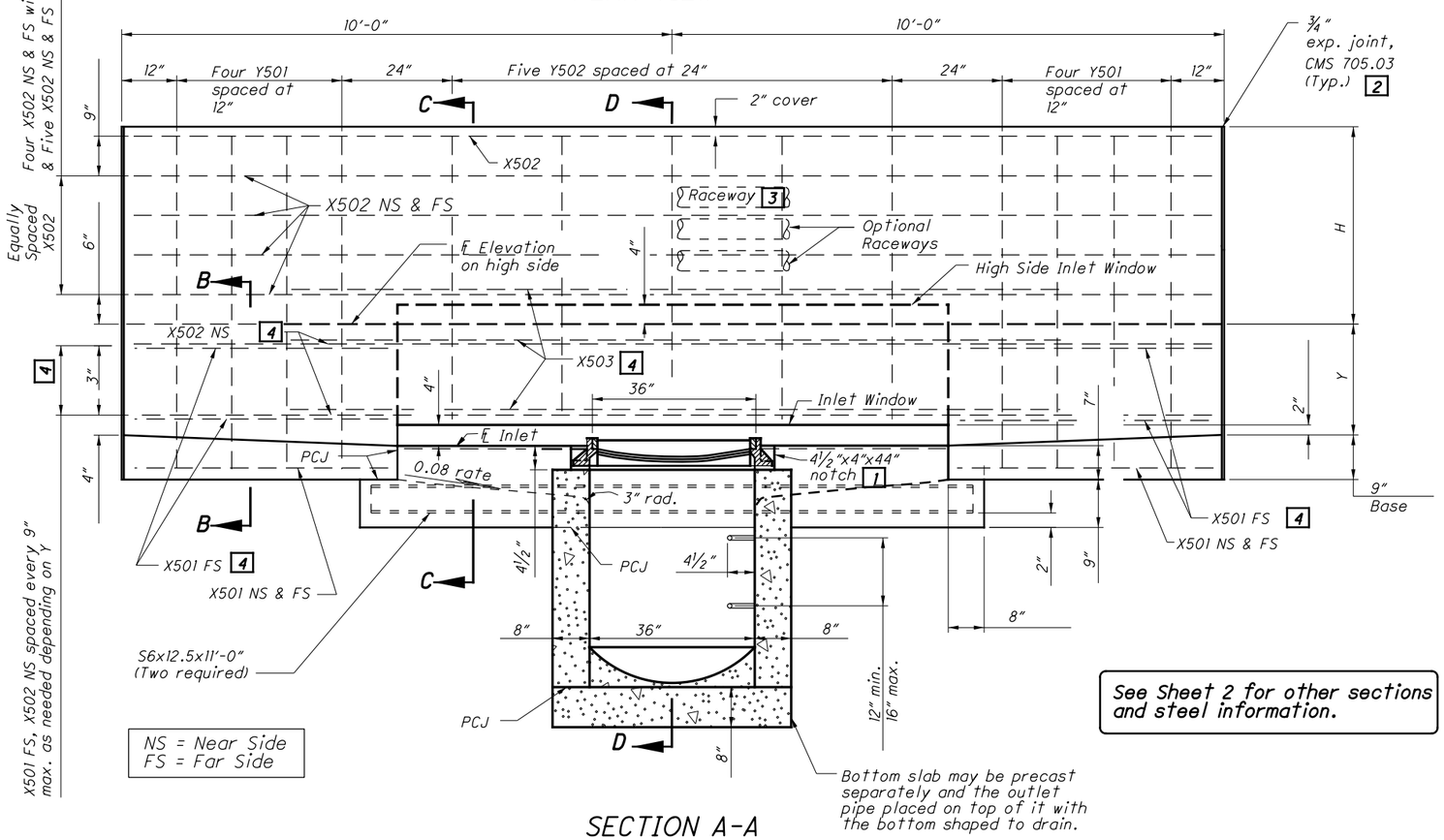

SECTION A-A

NOTES

GENERAL: See SCD RM-4.3 for details of Single Slope Concrete Barriers.

VARIABLE DIMENSIONS: Y denotes bifrucation and varies from greater than 0 to 24", as shown in the plans. Dimension D is dependent on Y and also varies.

WALLS: The walls between the bottom slab and the upper permissible construction joint may be built of brick, concrete block or cast-in-place concrete with a nominal thickness of 8" for depths of 12' or less. If precast, provide walls with a minimum thickness of 6" and reinforcement sufficient to permit shipping and handling without damage. The unit above the upper permissible construction joint may be precast or cast-in-place.

CONCRETE: Provide 4000 psi compressive strength concrete if cast-in-place. When precast, provide concrete that meets the requirements of CMS 706.13. Mark the inlet number on the structure. Seal the exposed concrete surfaces of the inlet per item 512 when specified in the plans.

REINFORCING STEEL: Provide epoxy coated reinforcing steel in accordance with CMS 509.09.

CASTINGS: Minimum mass of frame and cover is 540 lbs. See this sheet for CASTING DETAILS.

Lighter weight frames and grates that meet the requirements of CMS 711.14 may also be provided. Grate openings and dimensions may not differ from those shown unless otherwise shown in the plans.

STEPS: Provide steps in accordance with SCD MH-1.1.

INLETS OVER 12 FEET IN DEPTH: Provide precast or cast-in-place concrete for inlets over 12 feet in depth. Reinforce with #5 bars on 12" centers both vertically and horizontally with 2" clearance from the inside wall face.

OPENINGS: Pipe openings are the outside diameter of the pipe being supplied plus 2" when fabricated or field cut. Fill any voids per CMS 601.

PCJ: Permissible construction joint.

PAYMENT: Payment will be made at the unit price bid per Each for Item 611 - Inlet No. 3, for Single Slope Barrier, Type ____ (C or CI) and includes all materials, reinforcing steel, castings, raceways, wiring and labor required to construct the inlet, as shown. Sealing of exposed concrete and sealing of the barrier will be paid for under Item 512 when specified in the plans.

LEGEND

1. After casting is placed, fill notch with 4000 psi compressive strength concrete.
2. Provide a 1 1/2" minimum exp. joint in concrete pavement or concrete shoulders.
3. 4" electrical raceway. See Sheet 2 for RACEWAY PLACEMENT Details.
4. Number of X501, X502 and X503 reinforcing bars varies depending on bifrucation (Dimension Y).

STANDARD INLET TYPES

INLET No. 3	H	C	D
Type C	42"	14"	Varies from 14" when Y=0, to 18 3/8" when Y=24"
Type CI	57"	16 7/8"	Varies from 16 7/8" when Y=0, to 21 3/8" when Y=24"

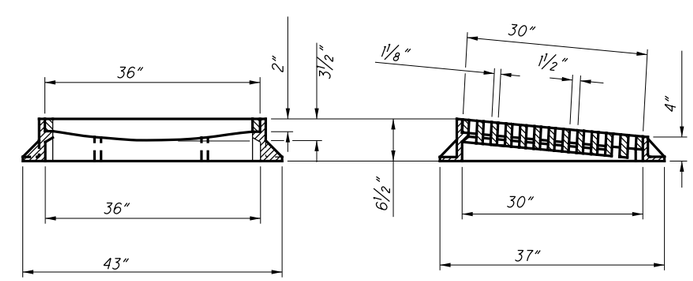

CASTING DETAILS

STATE OF OHIO DEPARTMENT OF TRANSPORTATION

STATE HYDRAULIC ENGINEER

REVISIONS
7-16-04
7-15-05
7-20-12
1-18-13

ROADWAY HYDRAULIC ENGINEER
Matt Cozzoli

OFFICE OF HYDRAULIC ENGINEERING

STANDARD HYDRAULIC CONSTRUCTION DRAWING

INLET No. 3 FOR SINGLE SLOPE BARRIER, TYPES C & C1

SCD NUMBER I-2.2

1 / 2

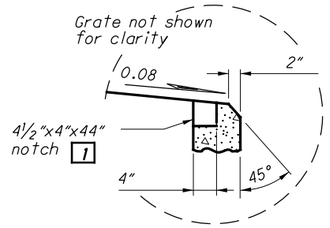

ALTERNATE SPILLWAY DETAIL

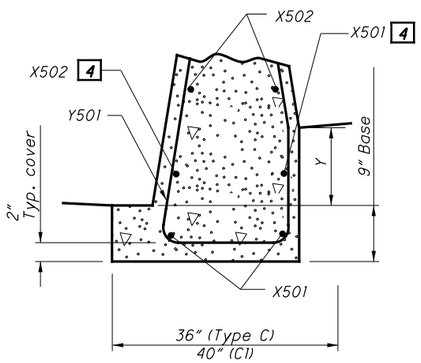

PARTIAL SECTION B-B

See Sheet 1

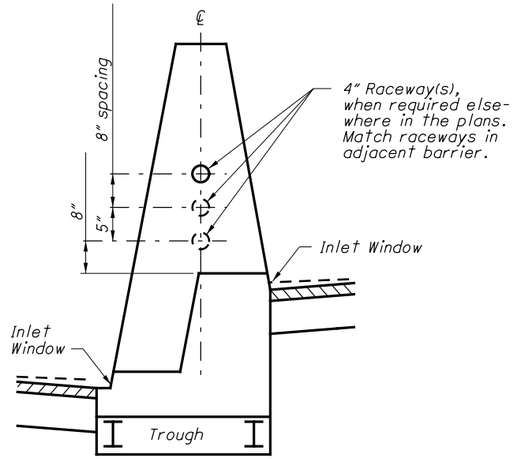

RACEWAY PLACEMENT

(Over Inlet Window)

For Standard Inlet Types, NOTES, LEGEND, Plan View and Section A-A, see Sheet 1.

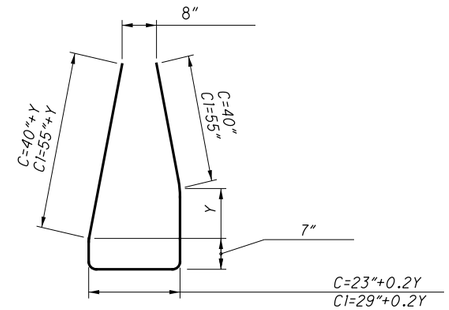

Y501

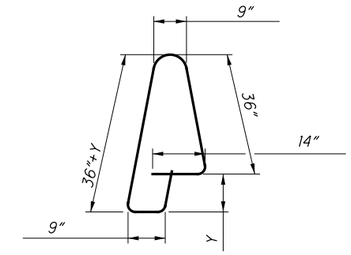

Y502
For Type C

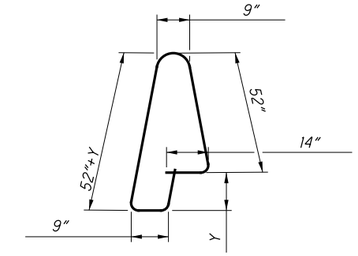

Y502
For Type C1

BENDING DIAGRAMS

STEEL LIST (For Estimating Purposes Only)

INLET NO. 3	X501 4 #5		X502 4 #5		X503 4 #5		Y501 #5		Y502 #5		S6x12.5	
	Straight		Straight		Straight		Bent		Bent			
	No.	Length	No.	Length	No.	Length	No.	Length	No.	Length	No.	Length
Type C	Varies 4 to 8	4'-8"	Varies 9 to 11	19'-8"	Varies 1 to 3	12'-0"	8	Varies 9'-6" to 13'-11"	5	Varies 8'-0" to 12'-0"	2	11'-0"
Type C1	Varies 4 to 8	**4'-8"**	Varies 11 to 13	19'-8"	Varies 1 to 3	**12'-0"**	8	Varies 12'-6" to 16'-11"	5	Varies 10'-6" to 14'-6"	2	11'-0"

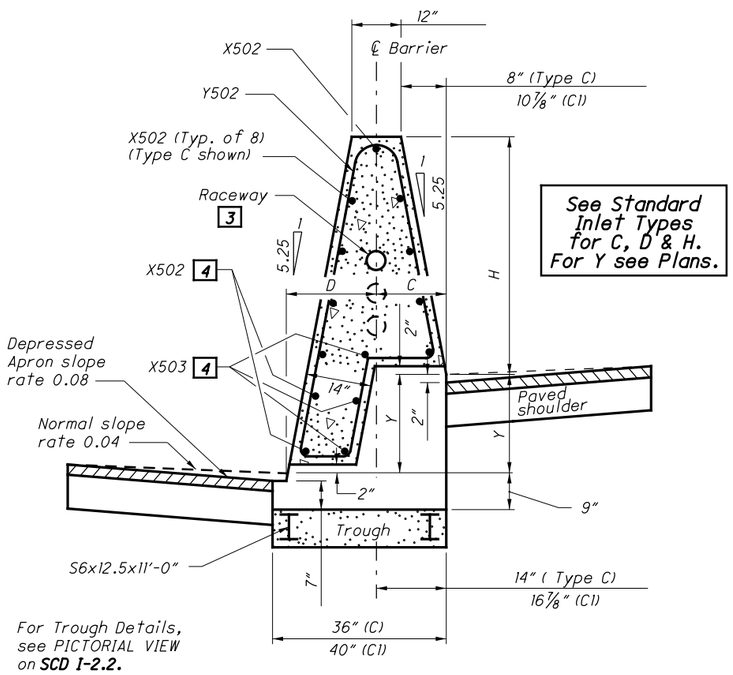

See Standard Inlet Types for C, D & H. For Y see Plans.

For Trough Details, see PICTORIAL VIEW on **SCD I-2.2.**

SECTION C-C

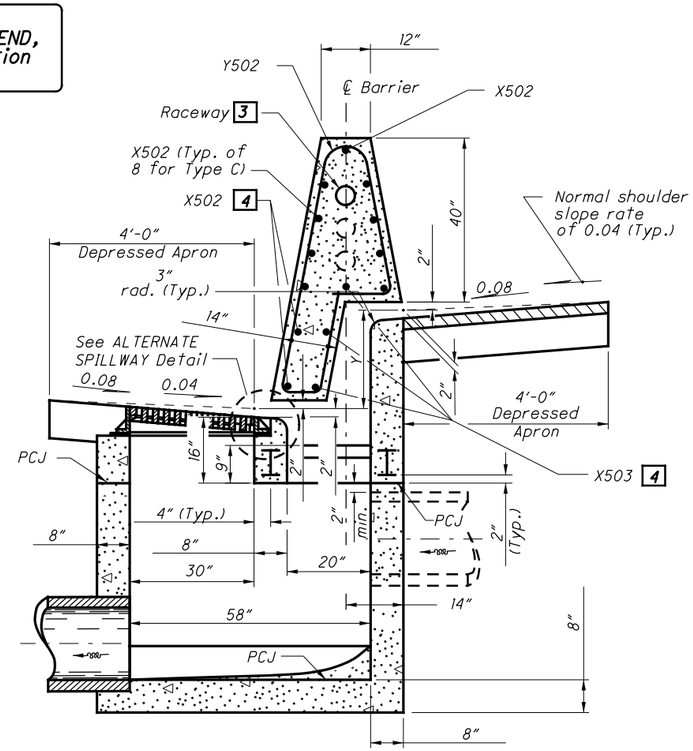

TYPE C
H=42"

SECTION D-D

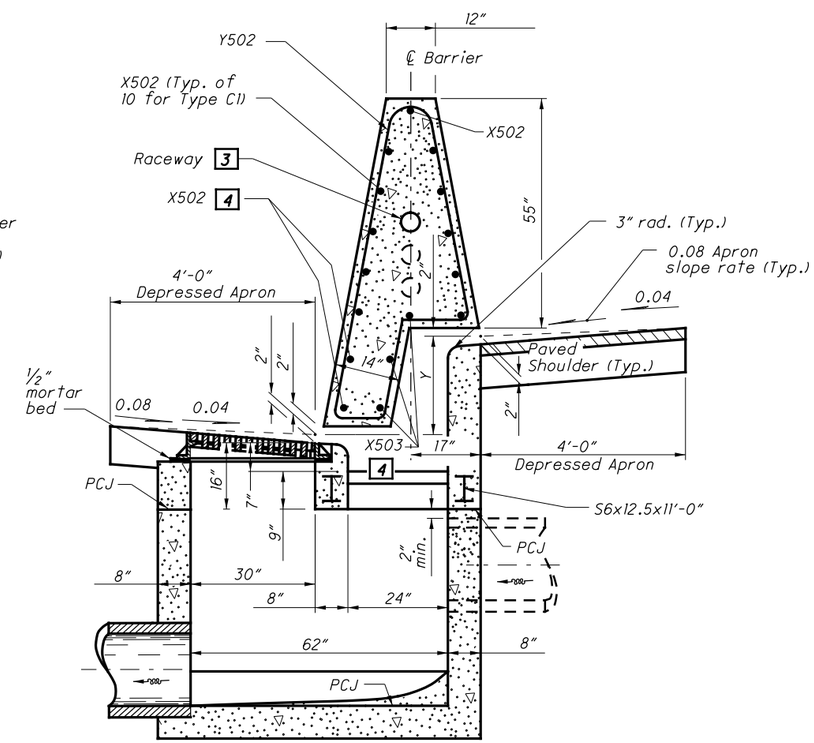

TYPE C1
H=57"

SECTION D-D

STATE OF OHIO DEPARTMENT OF TRANSPORTATION

STATE HYDRAULIC ENGINEER

REVISIONS
7-16-04
7-15-05
7-20-12
1-18-13

ROADWAY HYDRAULIC ENGINEER
Matt Cozzoli

OFFICE OF HYDRAULIC ENGINEERING

STANDARD HYDRAULIC CONSTRUCTION DRAWING

INLET No.3 FOR SINGLE SLOPE BARRIER, TYPES C & C1

SCD NUMBER
I-2.2