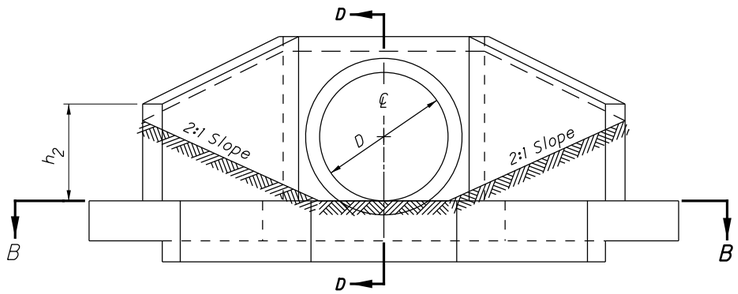

ELEVATION

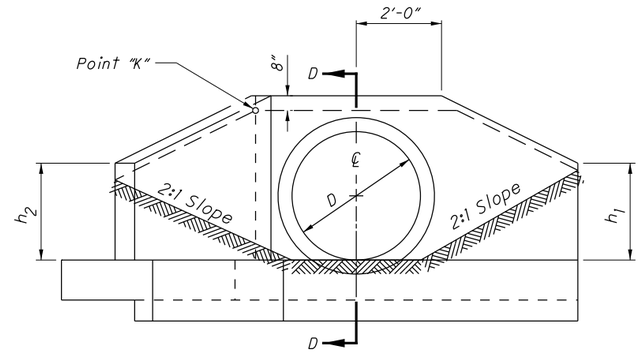

ELEVATION

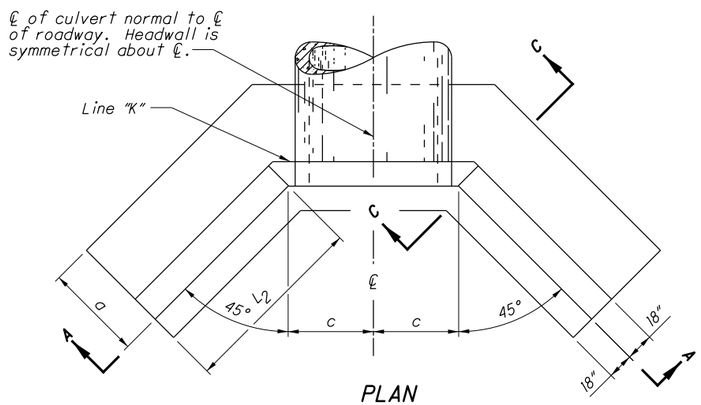

PLAN
TYPE "A"

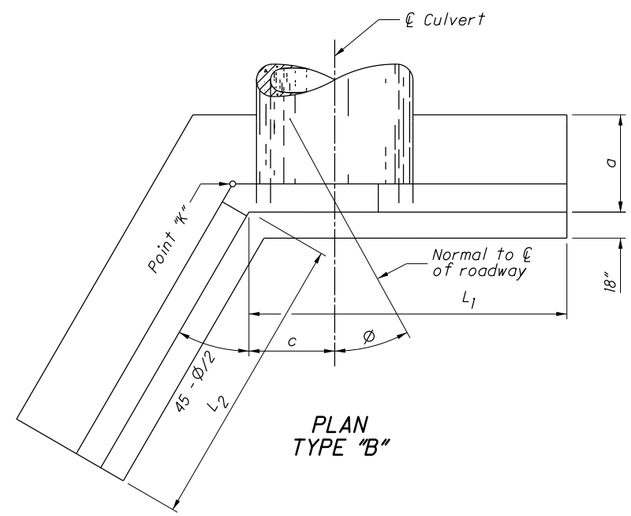

PLAN
TYPE "B"

NOTES

APPLICATION: *Provide Full Height Headwalls for skewed and non-skewed culverts having a diameter or rise of 42" to 84" inclusive. Use Type "A" when the skew angle (Φ) is ten degrees or less and Type "B" when the skew angle is over ten degrees.*

CONCRETE: *Use 4000 psi compressive strength concrete.*

REINFORCING STEEL: *Provide epoxy coated #5 bars.*

DETAILS AND QUANTITIES: *Are shown for circular sections only. When used with reinforced elliptical concrete pipe or corrugated metal pipe arches, adjust dimensions and quantities to conform to those listed for the nearest size circular pipe. Apply the dimensions established by vertical diameter to span. Round all calculated dimensions established by horizontal diameter to the nearest 1". Chamfer all exposed corners ¾".*

FOUNDATION: *Where the soil borings indicate a bearing capacity of less than 2,600 pounds per square foot, increase the width of the footing.*

HEADWALL LOCATION: *Determine by the intersection of the embankment slope at the back of the headwall at point "K". Provide 2:1 slopes adjacent to the headwall.*

PAYMENT: *Item 602 Concrete Masonry includes reinforcing.*

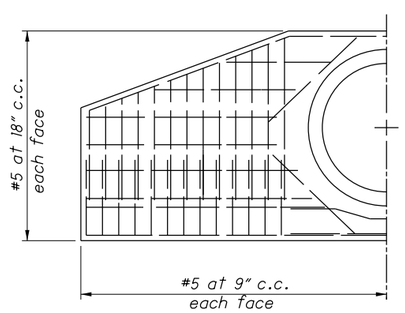

HALF SECTION A-A

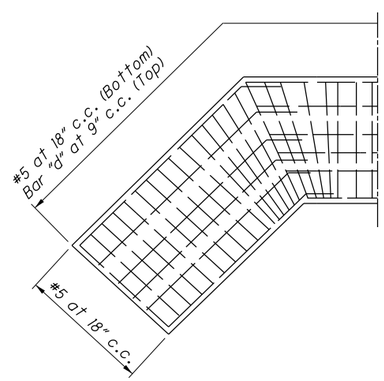

HALF-SECTION B-B

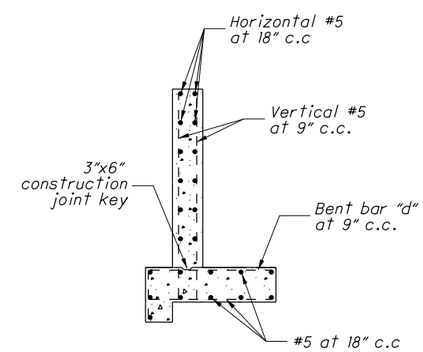

SECTION C-C

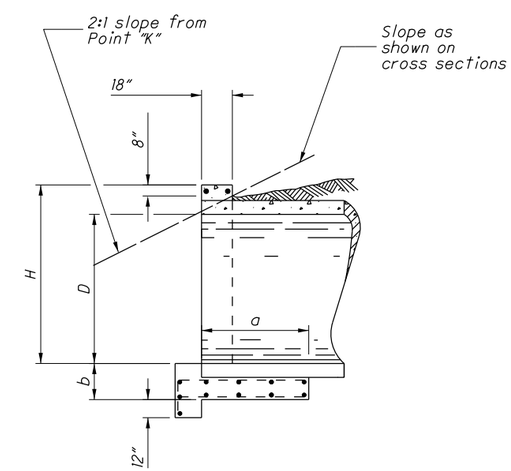

SECTION D-D

STATE OF OHIO DEPARTMENT OF TRANSPORTATION

STATE HYDRAULIC ENGINEER

REVISIONS
7/30/07
7/20/12
1/18/13

ROADWAY HYDRAULIC ENGINEER
Matt Cozzoli

OFFICE OF HYDRAULIC ENGINEERING

STANDARD HYDRAULIC CONSTRUCTION DRAWING

FULL-HEIGHT HEADWALLS

SCD NUMBER
HW-1.1

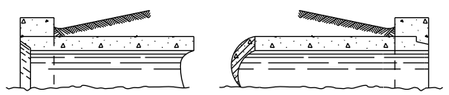

INLET END
GROOVE OR BELL
UPSTREAM

OUTLET END

RIGID PIPE

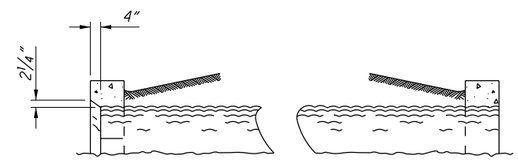

INLET END

OUTLET END

CORRUGATED PIPE
END TREATMENT OF HEADWALL

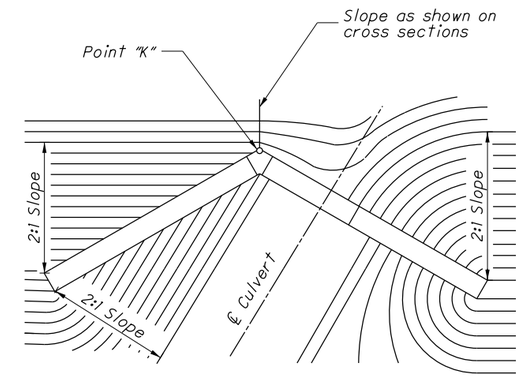

LOCATION AND GRADING PLAN FOR
SKEWED PIPE CULVERT - TYPE B

FULL-HEIGHT HEADWALLS (English)

PIPE DIA. D	H	a	b	c	Bar# d	Ø ≈ 0°					Ø ≈ 15°							Ø ≈ 30°							Ø ≈ 45°							PIPE DIA. D
						L_2	h_2	Conc. CMP (cy)	Conc. RCP (cy)	Steel (lbs.)	L_1	L_2	h_1	h_2	Conc. CMP (cy)	Conc. RCP (cy)	Steel (lbs.)	L_1	L_2	h_1	h_2	Conc. CMP (cy)	Conc. RCP (cy)	Steel (lbs.)	L_1	L_2	h_1	h_2	Conc. CMP (cy)	Conc. RCP (cy)	Steel (lbs.)	
42"	4'-11"	3'-3"	1'-6"	2'-6"	#5	3'-7"	3'-1"	7.0	6.7	598	8'-9"	4'-6"	3'-8"	3'-2"	7.3	7.1	619	7'-10"	5'-9"	3'-2"	3'-3"	7.5	7.3	633	7'-10"	7'-9"	3'-2"	3'-3"	8.7	8.5	718	**42"**
48"	5'-5"	3'-6"	1'-6"	2'-9"	#5	4'-4"	3'-4"	8.5	8.2	793	10'-0"	5'-4"	4'-1"	3'-5"	9.0	8.7	776	8'-9"	6'-10"	3'-5"	3'-6"	9.1	8.8	801	8'-9"	9'-2"	3'-5"	3'-7"	10.6	10.3	925	**48"**
54"	5'-11"	3'-9"	1'-6"	3'-0"	#5	5'-2"	3'-8"	10.3	10.0	1,069	11'-4"	6'-3"	4'-6"	3'-8"	10.9	10.5	1,026	9'-8"	7'-11"	3'-8"	3'-9"	10.8	10.5	1,024	9'-8"	10'-7"	3'-8"	3'-10"	12.6	12.2	1,188	**54"**
60"	6'-6"	4'-0"	1'-6"	3'-3"	#5	5'-11"	3'-11"	12.3	11.8	1,149	12'-7"	7'-2"	4'-10"	4'-0"	12.9	12.4	1,174	10'-7"	9'-0"	3'-10"	4'-1"	12.7	12.3	1,157	10'-7"	12'-0"	3'-10"	4'-1"	14.8	14.3	1,354	**60"**
72"	7'-7"	4'-6"	1'-7"	3'-9"	#7	7'-5"	4'-5"	17.0	16.2	1,783	15'-1"	8'-11"	5'-7"	4'-6"	17.8	17.1	1,811	12'-5"	11'-2"	4'-3"	4'-7"	17.3	16.6	1,788	12'-5"	14'-10"	4'-3"	4'-8"	20.2	19.6	2,076	**72"**
84"	8'-8"	5'-0"	1'-10"	4'-3"	#8	9'-0"	5'-0"	23.7	22.8	2,595	17'-7"	10'-9"	6'-4"	5'-1"	24.8	23.9	2,596	14'-7"	13'-4"	4'-10"	5'-2"	24.1	23.3	2,511	14'-3"	17'-8"	4'-8"	5'-2"	27.9	27.0	2,990	**84"**

STATE OF OHIO DEPARTMENT OF TRANSPORTATION
STATE HYDRAULIC ENGINEER

REVISIONS
7/30/07
7/20/12
1/18/13

ROADWAY HYDRAULIC ENGINEER
Matt Cozzoli

OFFICE OF HYDRAULIC ENGINEERING

STANDARD HYDRAULIC CONSTRUCTION DRAWING
FULL-HEIGHT HEADWALLS

SCD NUMBER
HW-1.1