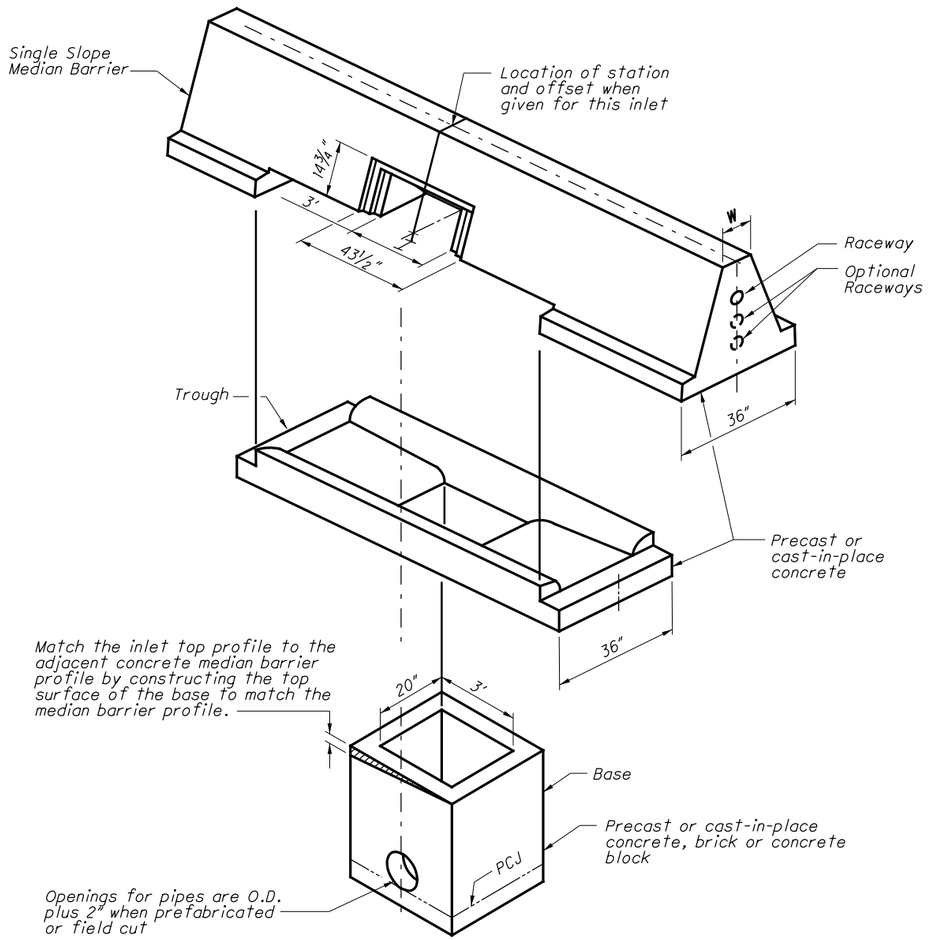

PICTORIAL VIEW

NOTES

GENERAL: For details of Single Slope Concrete Barriers, see SCD RM-4.3.

WALLS: The walls between the bottom slab and the upper permissible construction joint may be built of brick, concrete block or cast-in-place concrete, 8" nominal thickness for depths of 12' or less. Precast walls have a minimum thickness of 6" and are reinforced sufficiently to permit shipping and handling without damage.

CONCRETE: Provide 4000 psi compressive strength concrete when cast-in-place. When precast, provide concrete that meets the requirements of CMS 706.13. Mark the Inlet number on the structure. Seal the exposed concrete surfaces of the barrier per Item 512 when specified in the plans.

REINFORCING STEEL: Provide epoxy coated reinforcing steel in accordance with CMS 509.09.

STEPS: Provide steps in accordance with SCD MH-1.1.

INLETS OVER 12 FEET IN DEPTH: Precast or cast-in-place inlets over 12 feet in depth. Reinforce with #5 bars on 12" centers both vertically and horizontally, with 2" clearance from the inside wall face.

OPENINGS: Pipe openings are the outside diameter of the pipe being supplied plus 2" when fabricated or field cut. Fill any voids per CMS 601.

ACCESS DOOR: Provide galvanized steel for the door, frame and all inserts. Provide stainless steel hex head bolts.

DEPRESSED APRON: Slope the aprons on both sides of the inlet toward windows and fill with 4000 psi compressive strength concrete. On superelevated sections, slope the aprons as shown in Section C-C.

PCJ: Permissible construction joint.

PAYMENT: Payment will be made at the unit price bid per Each for Item 611 - Inlet, No. 4 for Single Slope Barrier, Type ___ (B or B1) and includes all materials, reinforcing steel, inlets, raceways, wiring, labor and incidentals required to construct the inlet, as shown. Sealing of exposed concrete and sealing of the barrier will be paid for under Item 512 when specified in the plans.

LEGEND

1 Provide a 1½" minimum exp. joint in concrete pavement or concrete shoulders.

2 4" electrical raceway, if required elsewhere in the plans. See RACEWAY PLACEMENT Details on Sheet 3.

STANDARD INLET TYPES

INLET NO. 4	W	H	A	B
Type B	12"	42"	4"	28"
Type B1	12"	57"	1⅛"	33¾"

STATE OF OHIO DEPARTMENT OF TRANSPORTATION

STATE HYDRAULIC ENGINEER

REVISIONS
7-16-04
7-15-05
10-21-11
7-20-12
1-18-13

ROADWAY HYDRAULIC ENGINEER
Matt Cozzoli

OFFICE OF HYDRAULIC ENGINEERING

STANDARD HYDRAULIC CONSTRUCTION DRAWING

INLET No. 4 FOR SINGLE SLOPE BARRIERS, TYPES B & B1

SCD NUMBER
I-2.4

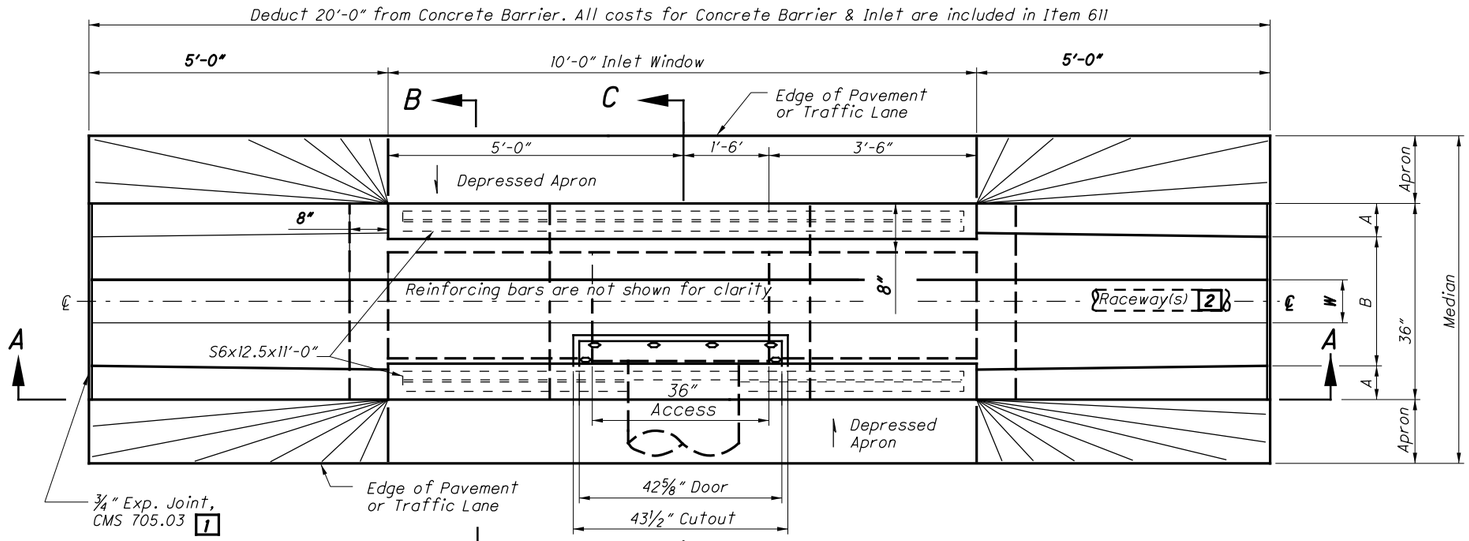

PLAN VIEW
NOT TO SCALE

NS = Near Side
FS = Far Side

For Dimensions W, H, A and B, see Standard Inlet Types on Sheet 1.

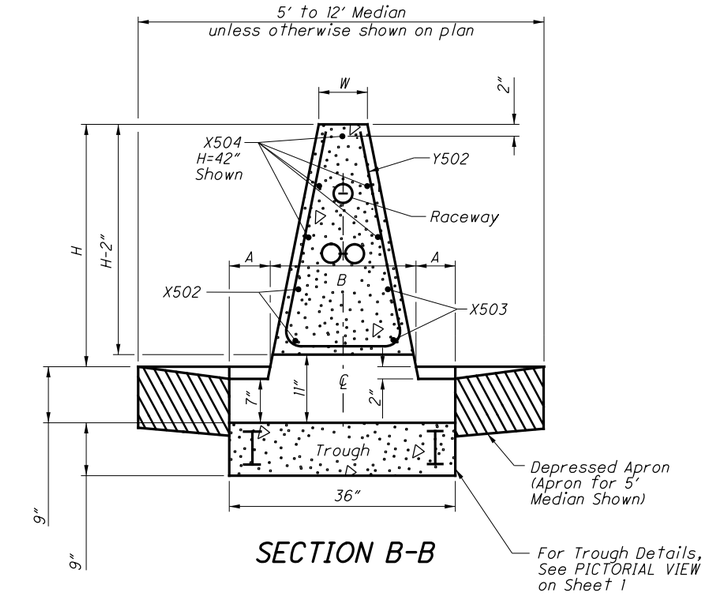

SECTION B-B

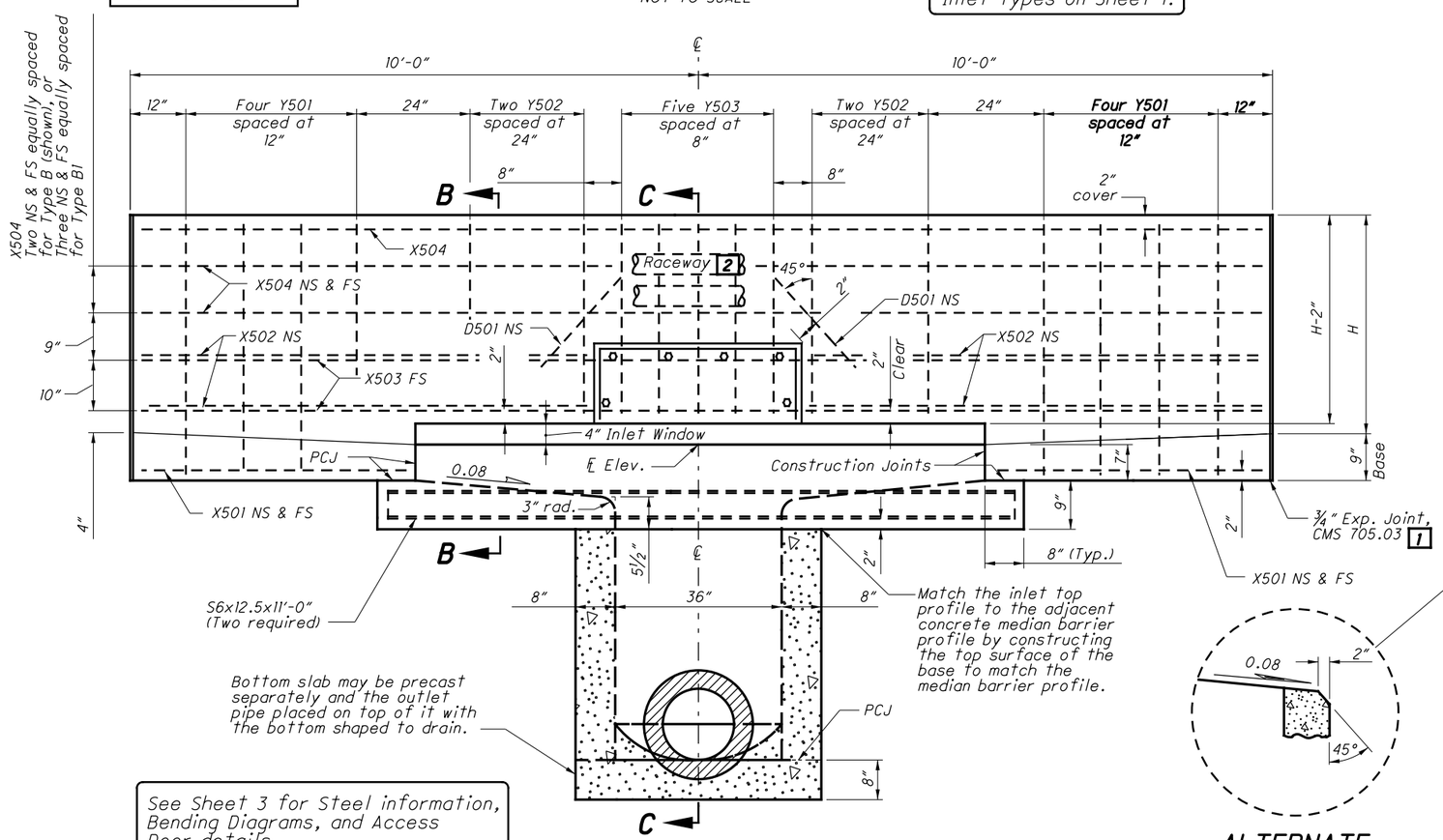

See Sheet 3 for Steel information, Bending Diagrams, and Access Door details.

SECTION A-A

ALTERNATE SPILLWAY DETAIL

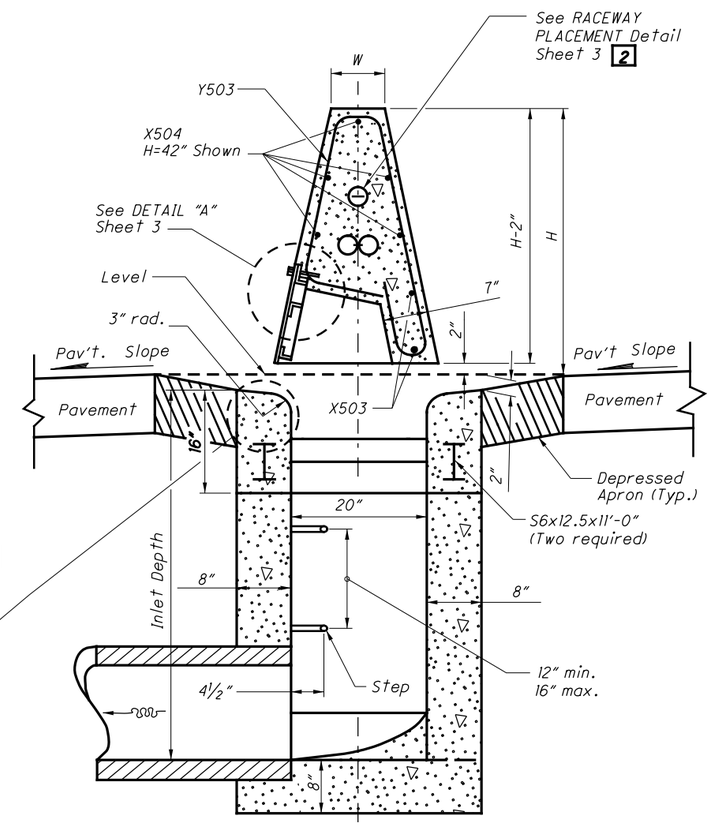

SECTION C-C

STATE OF OHIO DEPARTMENT OF TRANSPORTATION

STATE HYDRAULIC ENGINEER

REVISIONS
7-16-04
7-15-05
10-21-11
7-20-12
1-18-13

ROADWAY HYDRAULIC ENGINEER
Matt Cozzoli

OFFICE OF HYDRAULIC ENGINEERING

STANDARD HYDRAULIC CONSTRUCTION DRAWING

INLET No. 4 FOR SINGLE SLOPE BARRIER, TYPES B & B1

SCD NUMBER
I-2.4

STEEL LIST (For Estimating Purposes Only)

INLET NO. 4	X501 #5 bar Straight		X502 #5 bar Straight		X503 #5 bar Straight		X504 #5 bar Straight		Y501 #5 bar Bent		Y502 #5 bar Bent		Y503 #5 bar Bent		D501 #5 bar Straight		S6x12.5	
	No.	Length	No.	Length	No.	Length	No.	Length	No.	Length	No.	Length	No.	Length	No.	Length	No.	Length
Type B	4	4'-8"	4	7'-10"	2	19'-8"	5	19'-8"	8	9'-9"	4	7'-9"	5	7'-6"	2	2'-0"	2	11'-0"
Type B1	4	4'-8"	4	7'-10"	2	19'-8"	7	19'-8"	8	12'-9"	4	10'-9"	5	10'-5"	2	2'-0"	2	11'-0"

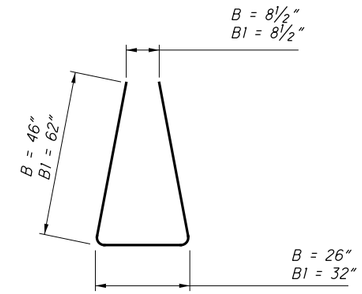

Y501

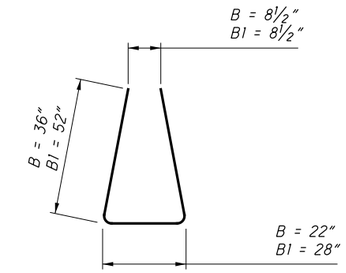

Y502

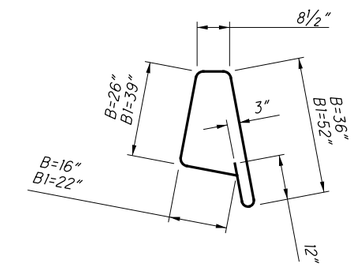

Y503

For Types B and B1

BENDING DIAGRAMS

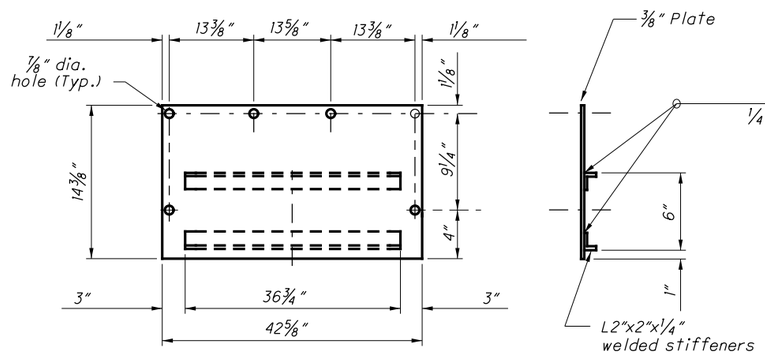

FRONT SIDE

ACCESS DOOR DETAILS

See Sheet 1 for NOTES and LEGEND. See Sheet 2 for Plan, Elevation, and Section Views.

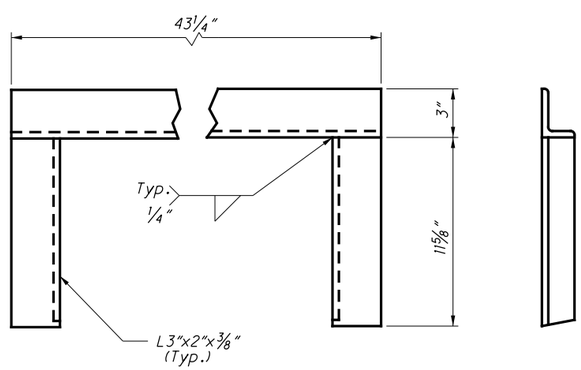

FRONT SIDE

WELDED FRAME DETAIL

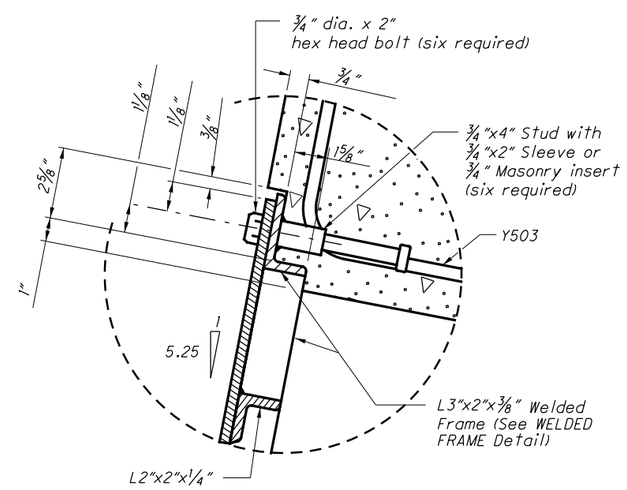

DETAIL "A"

See SECTION C-C ON Sheet 2

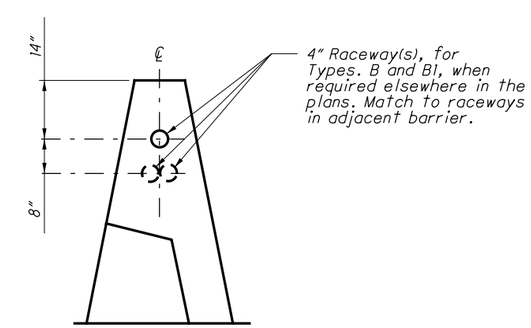

RACEWAY PLACEMENT

(Over Access Cutout)

STATE OF OHIO DEPARTMENT OF TRANSPORTATION

STATE HYDRAULIC ENGINEER

REVISIONS
7-16-04
7-15-05
10-21-11
7-20-12
1-18-13

ROADWAY HYDRAULIC ENGINEER Matt Cozzoli

OFFICE OF HYDRAULIC ENGINEERING

STANDARD HYDRAULIC CONSTRUCTION DRAWING

INLET No. 4 FOR SINGLE SLOPE BARRIER, TYPES B & B1

SCD NUMBER I-2.4