CONSTRUCTION METHODS

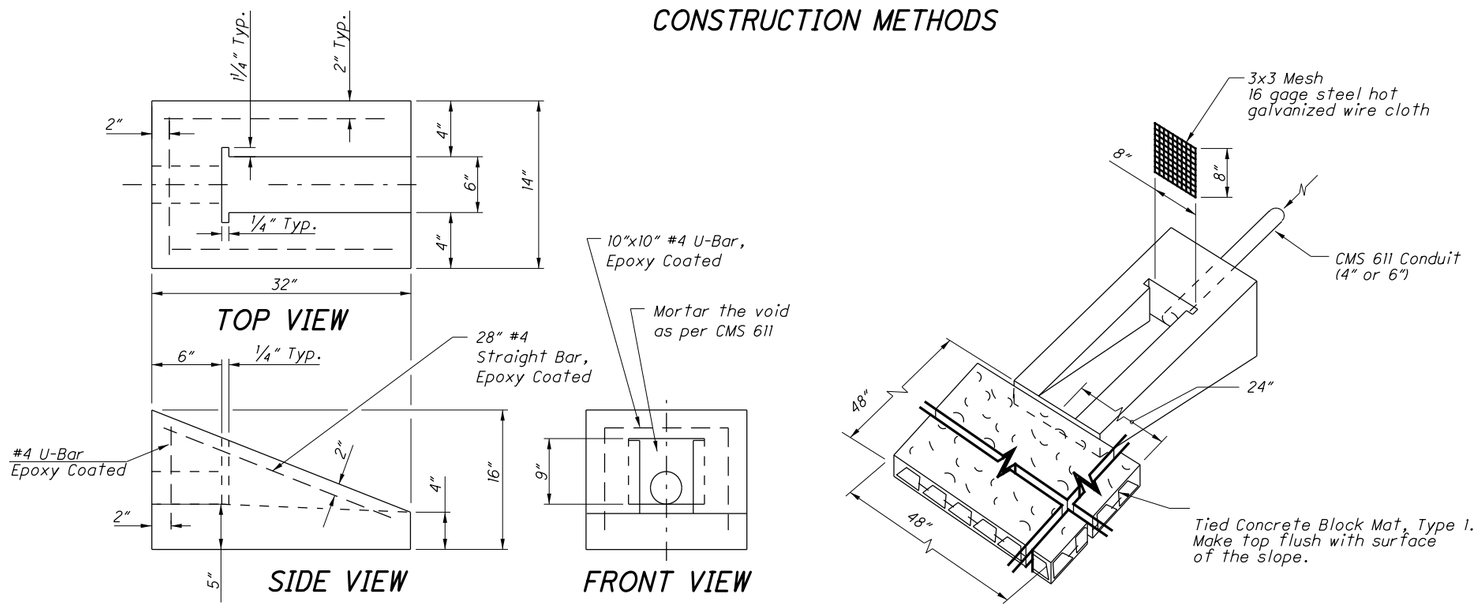

PRECAST REINFORCED CONCRETE OUTLET

NOTES

EROSION CONTROL PAD AND ANIMAL GUARDS: Provide these items at the outlet end of all farm drains except where they outlet into a drainage structure.

Furnish galvanized steel bolts or rods for the animal guard per CMS 711.02. Instead of drilling or punching the ½" diameter holes into the pipe, a metal collar meeting all of the above requirements may be clamped onto the pipe if approved by the Engineer.

PAYMENT: Erosion control pads and animal guards are included in the unit price bid for **Item 611 - __ Inch Conduit, Type __ .**

PRECAST REINFORCED CONCRETE OUTLET: Provide a concrete outlet that meets CMS 611 requirements.

PAYMENT: The precast reinforced concrete outlet and wire mesh are paid at the contract unit price bid for **Item 611 - Precast Reinforced Concrete Outlet.**

Tied Concrete Block Mat, Type 1 is paid at the contract unit price bid for **Item 601 - Tied Concrete Block Mat, Type 1.**

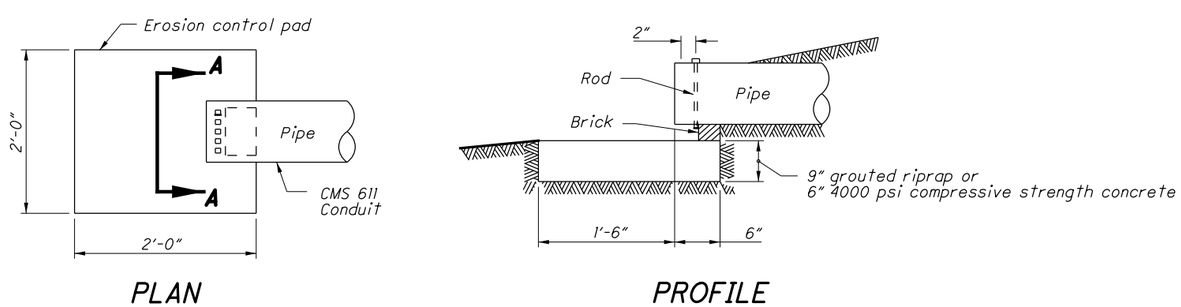

PLAN PROFILE

EROSION CONTROL PAD AND ANIMAL GUARD FOR OUTLET PIPE

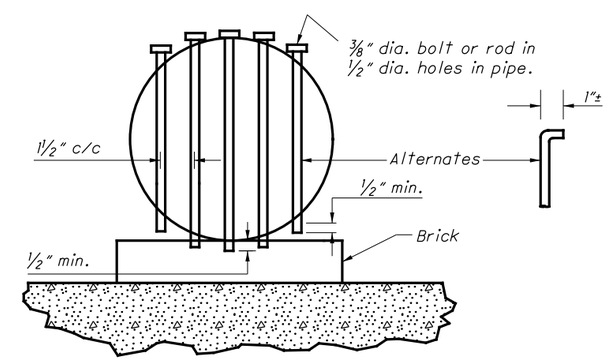

SECTION A-A

CONDUIT SIZE	4"	6"	8"	10"	12"	15"	18"
No. of Bolts	2	3	5	6	7	9	11

STATE OF OHIO DEPARTMENT OF TRANSPORTATION

STATE HYDRAULIC ENGINEER

REVISIONS
7-19-02
7-18-03
1-21-05
10-21-05
4-21-06
1-21-11
7-20-12
1-18-13

ROADWAY HYDRAULIC ENGINEER
Matt Cozzoli

OFFICE OF HYDRAULIC ENGINEERING

STANDARD HYDRAULIC CONSTRUCTION DRAWING

OUTLETS, DRAINS AND SEWERS

SCD NUMBER
DM-1.1

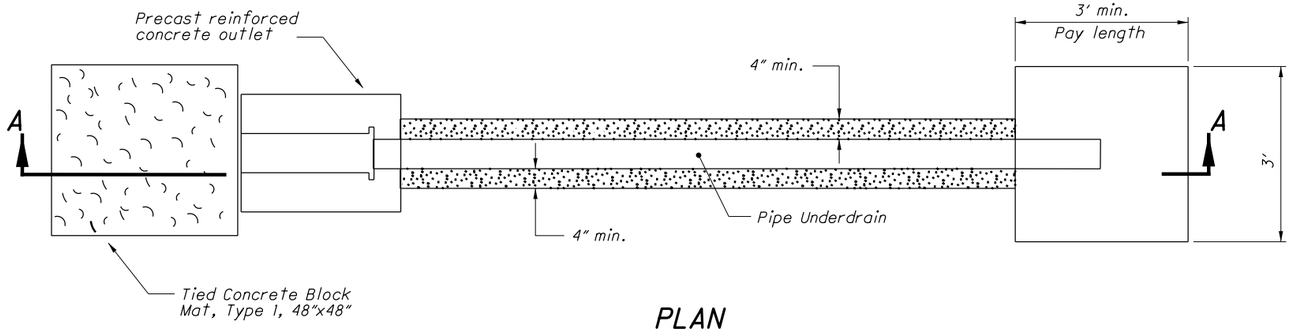

PLAN

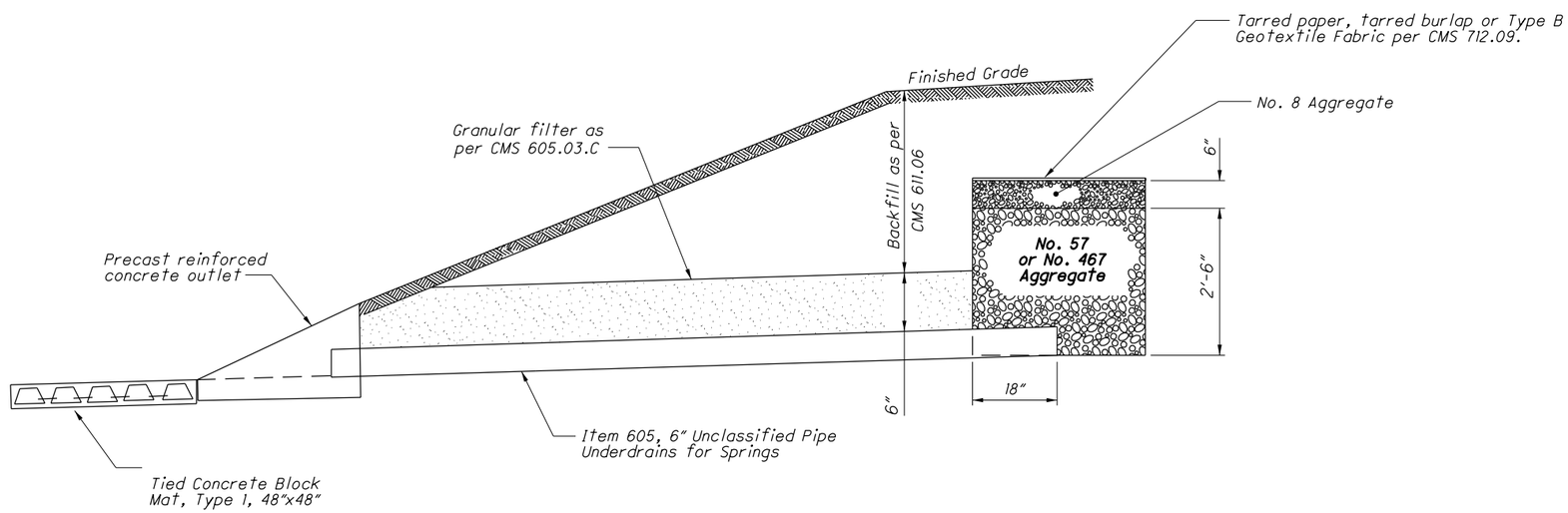

SECTION A-A
SPRING DRAIN DETAIL

NOTES

SPRING DRAIN: Aggregates, tarred paper, tarred burlap, or geotextile fabric backfill and necessary excavation for spring drains are included for payment in the unit price bid per Foot for **Item 605, Aggregate Drains for Springs.**

PAYMENT: The pipe is included in the unit price bid per Foot for **Item 605 - 6" Unclassified Pipe Underdrains for Springs.**

PRECAST REINFORCED CONCRETE OUTLET: Provide a concrete outlet that meets CMS 611 requirements.

PAYMENT: The precast reinforced concrete outlet and wire mesh is paid at the contract unit price bid for **Item 611 - Precast Reinforced Concrete Outlet.**

Tied Concrete Block Mat, Type 1 is paid at the contract unit price bid for **Item 601 - Tied Concrete Block Mat, Type 1.**

STATE OF OHIO DEPARTMENT OF TRANSPORTATION

STATE HYDRAULIC ENGINEER

REVISIONS
7-19-02
7-18-03
1-21-05
10-21-05
4-21-06
1-21-11
7-20-12
1-18-13

ROADWAY HYDRAULIC ENGINEER
Matt Cozzoli

OFFICE OF HYDRAULIC ENGINEERING

STANDARD HYDRAULIC CONSTRUCTION DRAWING

OUTLETS, DRAINS AND SEWERS

SCD NUMBER
DM-1.1

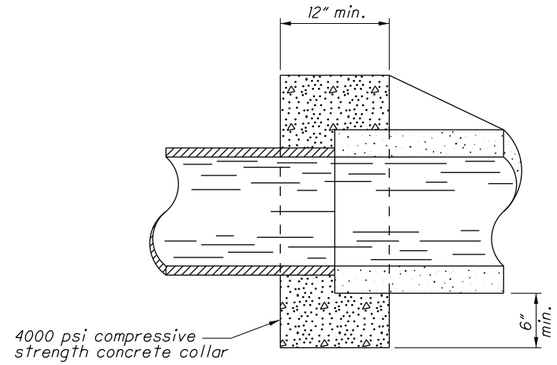

MASONRY COLLAR

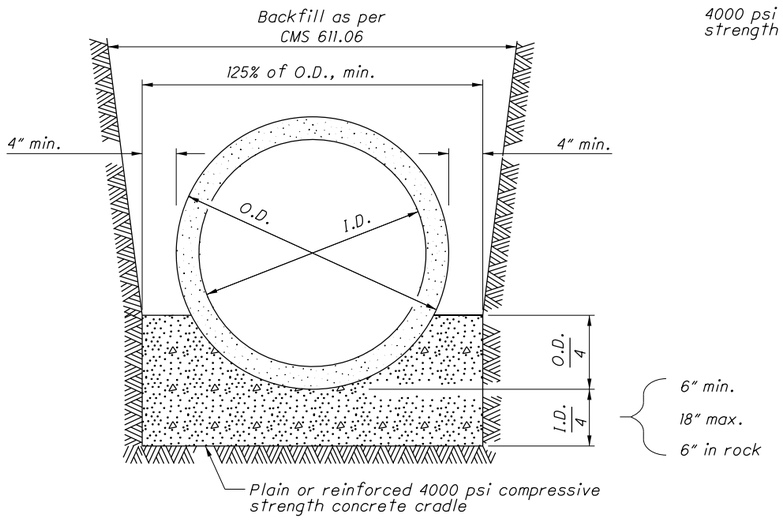

CONCRETE CRADLE

NOTES

MASONRY COLLARS: Provide a masonry collar where plans require that a pipe extension be joined to the end of an existing pipe with a butt joint. The cost is included in the unit price bid for the new conduit.

RIPRAP CUTOFF WALL:
The cost of the cutoff wall is included in the unit price bid for Item 601 Riprap Using 6" Reinforced Concrete Slab.

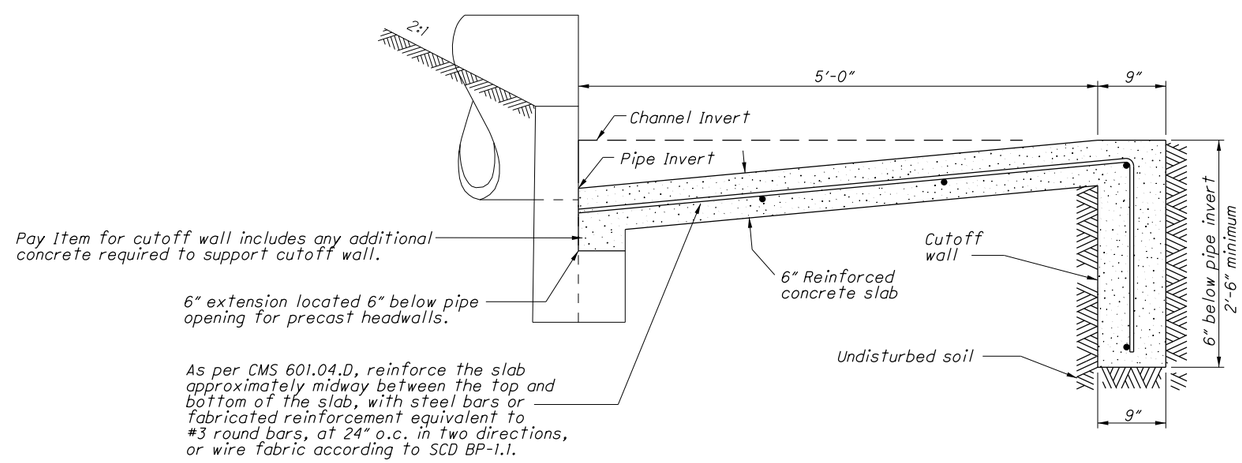

RIPRAP CUTOFF WALL

STATE OF OHIO DEPARTMENT OF TRANSPORTATION
STATE HYDRAULIC ENGINEER

REVISIONS
7-19-02
7-18-03
1-21-05
10-21-05
4-21-06
1-21-11
7-20-12
1-18-13

ROADWAY HYDRAULIC ENGINEER
Matt Cozzoli

OFFICE OF HYDRAULIC ENGINEERING

STANDARD HYDRAULIC CONSTRUCTION DRAWING
OUTLETS, DRAINS AND SEWERS

SCD NUMBER
DM-1.1