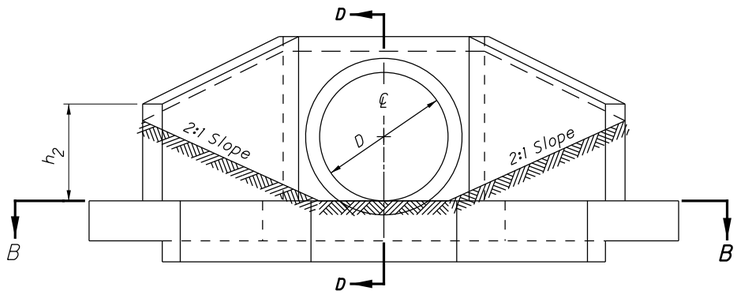

ELEVATION

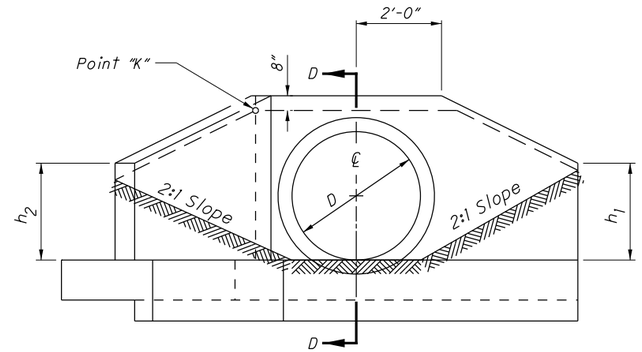

ELEVATION

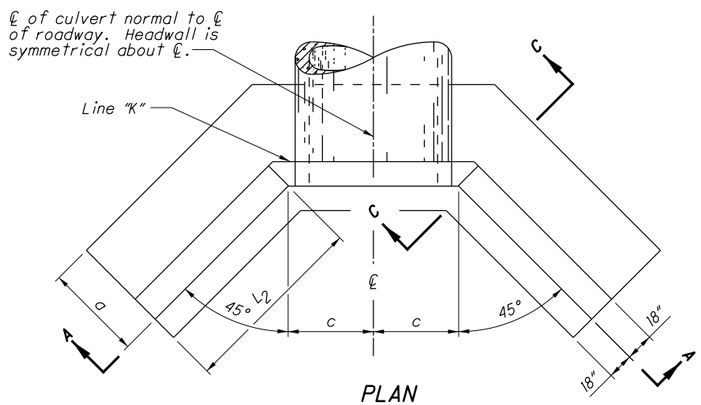

PLAN
TYPE "A"

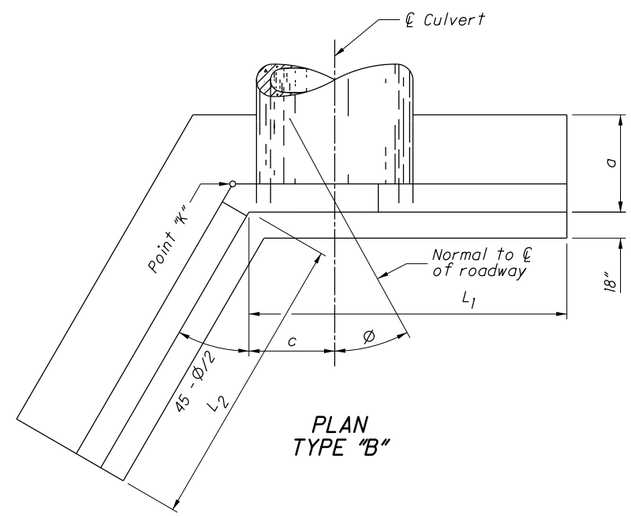

PLAN
TYPE "B"

NOTES

APPLICATION: *Provide Full Height Headwalls for skewed and non-skewed culverts having a diameter or rise of 42" to 84" inclusive. Use Type "A" when the skew angle (Φ) is ten degrees or less and Type "B" when the skew angle is over ten degrees.*

CONCRETE: *Use 4000 psi compressive strength concrete.*

REINFORCING STEEL: *Provide epoxy coated #5 bars.*

DETAILS AND QUANTITIES: *Are shown for circular sections only. When used with reinforced elliptical concrete pipe or corrugated metal pipe arches, adjust dimensions and quantities to conform to those listed for the nearest size circular pipe. Apply the dimensions established by vertical diameter to span. Round all calculated dimensions established by horizontal diameter to the nearest 1". Chamfer all exposed corners ¾".*

FOUNDATION: *Where the soil borings indicate a bearing capacity of less than 2,600 pounds per square foot, increase the width of the footing.*

HEADWALL LOCATION: *Determine by the intersection of the embankment slope at the back of the headwall at point "K". Provide 2:1 slopes adjacent to the headwall.*

PAYMENT: *Item 602 Concrete Masonry includes reinforcing.*

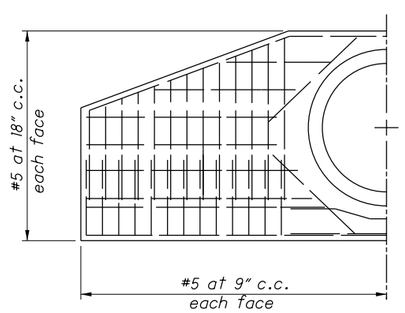

HALF SECTION A-A

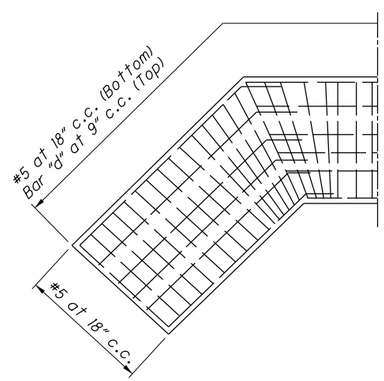

HALF-SECTION B-B

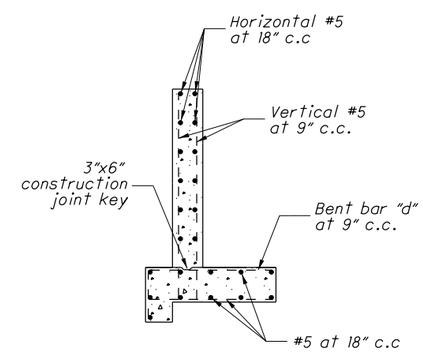

SECTION C-C

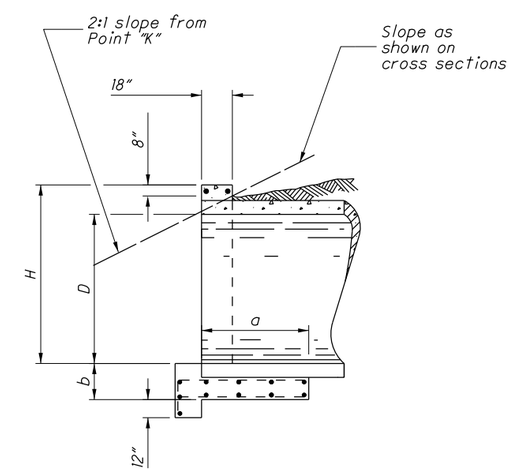

SECTION D-D

STATE OF OHIO DEPARTMENT OF TRANSPORTATION

STATE HYDRAULIC ENGINEER

REVISIONS
7/30/07
7/20/12
1/18/13

ROADWAY HYDRAULIC ENGINEER
Matt Cozzoli

OFFICE OF HYDRAULIC ENGINEERING

STANDARD HYDRAULIC CONSTRUCTION DRAWING

FULL-HEIGHT HEADWALLS

SCD NUMBER
HW-1.1

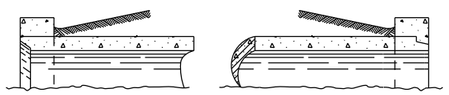

INLET END
GROOVE OR BELL
UPSTREAM

OUTLET END

RIGID PIPE

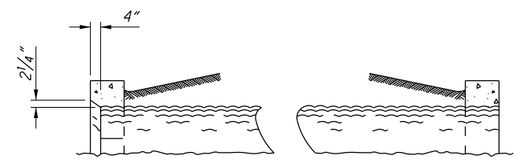

INLET END

OUTLET END

CORRUGATED PIPE
END TREATMENT OF HEADWALL

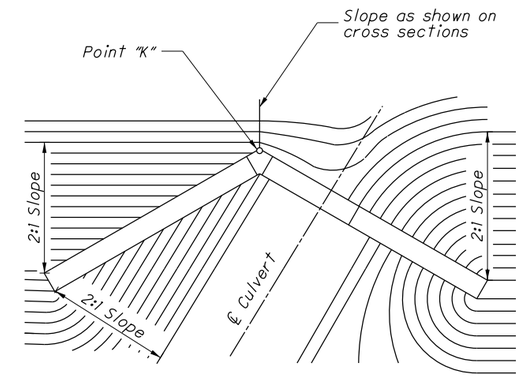

LOCATION AND GRADING PLAN FOR
SKEWED PIPE CULVERT - TYPE B

FULL-HEIGHT HEADWALLS (English)

PIPE DIA. D	H	a	b	c	Bar# d	Ø ≈ 0°					Ø ≈ 15°							Ø ≈ 30°							Ø ≈ 45°							PIPE DIA. D
						L_2	h_2	Conc. CMP (cy)	Conc. RCP (cy)	Steel (lbs.)	L_1	L_2	h_1	h_2	Conc. CMP (cy)	Conc. RCP (cy)	Steel (lbs.)	L_1	L_2	h_1	h_2	Conc. CMP (cy)	Conc. RCP (cy)	Steel (lbs.)	L_1	L_2	h_1	h_2	Conc. CMP (cy)	Conc. RCP (cy)	Steel (lbs.)	
42"	4'-11"	3'-3"	1'-6"	2'-6"	#5	3'-7"	3'-1"	7.0	6.7	598	8'-9"	4'-6"	3'-8"	3'-2"	7.3	7.1	619	7'-10"	5'-9"	3'-2"	3'-3"	7.5	7.3	633	7'-10"	7'-9"	3'-2"	3'-3"	8.7	8.5	718	**42"**
48"	5'-5"	3'-6"	1'-6"	2'-9"	#5	4'-4"	3'-4"	8.5	8.2	793	10'-0"	5'-4"	4'-1"	3'-5"	9.0	8.7	776	8'-9"	6'-10"	3'-5"	3'-6"	9.1	8.8	801	8'-9"	9'-2"	3'-5"	3'-7"	10.6	10.3	925	**48"**
54"	5'-11"	3'-9"	1'-6"	3'-0"	#5	5'-2"	3'-8"	10.3	10.0	1,069	11'-4"	6'-3"	4'-6"	3'-8"	10.9	10.5	1,026	9'-8"	7'-11"	3'-8"	3'-9"	10.8	10.5	1,024	9'-8"	10'-7"	3'-8"	3'-10"	12.6	12.2	1,188	**54"**
60"	6'-6"	4'-0"	1'-6"	3'-3"	#5	5'-11"	3'-11"	12.3	11.8	1,149	12'-7"	7'-2"	4'-10"	4'-0"	12.9	12.4	1,174	10'-7"	9'-0"	3'-10"	4'-1"	12.7	12.3	1,157	10'-7"	12'-0"	3'-10"	4'-1"	14.8	14.3	1,354	**60"**
72"	7'-7"	4'-6"	1'-7"	3'-9"	#7	7'-5"	4'-5"	17.0	16.2	1,783	15'-1"	8'-11"	5'-7"	4'-6"	17.8	17.1	1,811	12'-5"	11'-2"	4'-3"	4'-7"	17.3	16.6	1,788	12'-5"	14'-10"	4'-3"	4'-8"	20.2	19.6	2,076	**72"**
84"	8'-8"	5'-0"	1'-10"	4'-3"	#8	9'-0"	5'-0"	23.7	22.8	2,595	17'-7"	10'-9"	6'-4"	5'-1"	24.8	23.9	2,596	14'-7"	13'-4"	4'-10"	5'-2"	24.1	23.3	2,511	14'-3"	17'-8"	4'-8"	5'-2"	27.9	27.0	2,990	**84"**

STATE OF OHIO DEPARTMENT OF TRANSPORTATION
STATE HYDRAULIC ENGINEER

REVISIONS
7/30/07
7/20/12
1/18/13

ROADWAY HYDRAULIC ENGINEER
Matt Cozzoli

OFFICE OF HYDRAULIC ENGINEERING

STANDARD HYDRAULIC CONSTRUCTION DRAWING
FULL-HEIGHT HEADWALLS

SCD NUMBER
HW-1.1

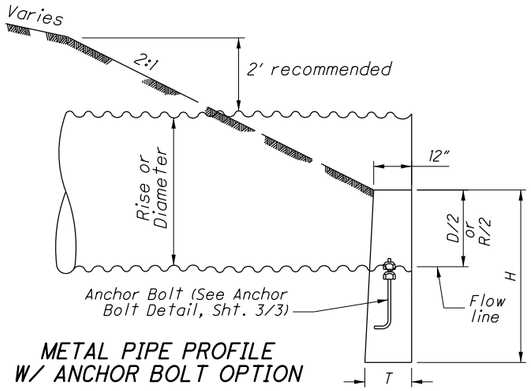

METAL PIPE PROFILE
W/ ANCHOR BOLT OPTION

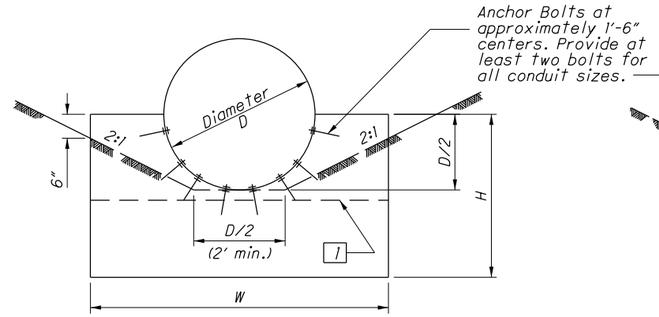

CIRCULAR

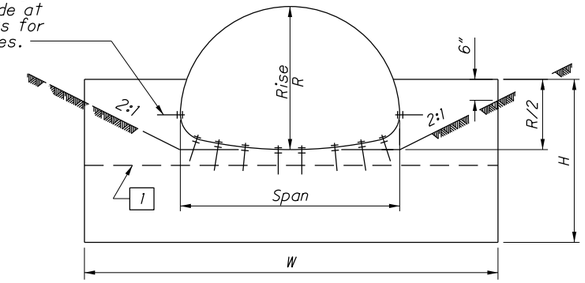

PIPE-ARCH

METAL PIPE END TREATMENT "A" W/ ANCHOR BOLT OPTION

CAST-IN-PLACE HW FOR CORRUGATED METAL PIPE & PLASTIC PIPE (English)																	
CIRCULAR					PIPE ARCH						PIPE ARCH						
D	W	H	T	CONC. cu. yds.	SPAN	RISE	W	H	T	CONC. cu. yds.	SPAN	RISE	W	H	T	CONC. cu. yds.
12"	2'-0"	3'-0"	12"	0.21	2.67"x1/2" Corrugations						*81"	59"	12'-4"	5'-5"	15"	2.14
15"	2'-6"	3'-2"	12"	0.27	17"	13"	3'-0"	3'-0"	12"	0.31	87"	63"	13'-0"	5'-7"	17"	2.50
18"	3'-0"	3'-3"	12"	0.33	21"	15"	3'-6"	3'-0"	12"	0.35	95"	67"	14'-0"	5'-9"	20"	3.14
21"	3'-6"	3'-4"	12"	0.39	24"	18"	4'-0"	3'-2"	12"	0.43	103"	71"	15'-0"	5'-11"	22"	3.54
24"	4'-0"	3'-6"	12"	0.46	28"	20"	4'-6"	3'-3"	12"	0.48	112"	75"	16'-0"	6'-1"	24"	3.96
27"	4'-6"	3'-8"	12"	0.53	35"	24"	5'-6"	3'-5"	12"	0.61	117"	79"	17'-9"	6'-3"	25"	4.89
30"	5'-0"	3'-9"	12"	0.60	42"	29"	6'-6"	3'-7"	12"	0.73	128"	83"	18'-0"	6'-5"	26"	5.01
33"	5'-6"	3'-10"	12"	0.68	49"	33"	7'-8"	3'-9"	12"	0.90	137"	87"	19'-0"	6'-7"	27"	5.45
36"	6'-0"	4'-0"	12"	0.76	57"	38"	9'-0"	4'-0"	12"	1.10	142"	91"	20'-9"	6'-9"	27"	6.31
39"	6'-6"	4'-2"	12"	0.84	64"	43"	10'-0"	4'-4"	12"	1.31	6"x2" Corrugations (18" Corner Radius)					
42"	7'-0"	4'-3"	12"	0.92	71"	47"	11'-0"	4'-8"	12"	1.54						
48"	8'-0"	4'-6"	12"	1.10	*77"	52"	11'-8"	5'-3"	12"	1.84	*6'-1"	4'-7"	11'-8"	5'-7"	12"	1.89
54"	9'-3"	4'-9"	12"	1.33	*83"	57"	12'-4"	5'-5"	15"	2.46	*6'-4"	4'-9"	12'-0"	5'-8"	14"	2.12
60"	10'-6"	5'-6"	12"	1.78	6"x2" Corrugations (31" Corner Radius)						*6'-9"	4'-11"	12'-4"	5'-9"	15"	2.42
66"	11'-9"	5'-9"	12"	2.06							*7'-0"	5'-1"	12'-8"	5'-10"	16"	2.44
72"	13'-0"	6'-0"	12"	2.37	13'-3"	9'-4"	23'-11"	7'-11"	32"	9.63	7'-3"	5'-3"	12'-11"	5'-11"	17"	2.69
78"	14'-3"	6'-3"	14"	2.94	13'-6"	9'-6"	24'-9"	8'-0"	32"	10.12	7'-8"	5'-5"	13'-2"	6'-0"	18"	2.77
84"	15'-6"	6'-6"	14"	3.30	14'-0"	9'-8"	24'-10"	8'-1"	33"	10.33	7'-11"	5'-7"	14'-0"	6'-1"	20"	3.15
90"	16'-9"	6'-9"	16"	4.00	14'-2"	9'-10"	25'-9"	8'-2"	33"	10.87	8'-2"	5'-9"	14'-8"	6'-2"	21"	3.45
96"	18'-0"	7'-0"	16"	4.40	14'-5"	10'-0"	26'-7"	8'-3"	33"	11.39	8'-7"	5'-11"	15'-0"	6'-3"	22"	3.75
102"	19'-3"	7'-3"	18"	5.28	14'-11"	10'-2"	26'-9"	8'-4"	34"	11.68	8'-10"	6'-1"	15'-10"	6'-4"	23"	4.15
108"	20'-6"	7'-6"	20"	6.21	15'-4"	10'-4"	26'-11"	8'-5"	34"	11.96	9'-4"	6'-3"	16'-0"	6'-5"	24"	4.65
114"	21'-9"	7'-9"	22"	7.25	15'-7"	10'-6"	27'-9"	8'-6"	34"	12.51	9'-6"	6'-5"	16'-10"	6'-6"	26"	4.93
120"	23'-0"	8'-0"	24"	8.38	15'-10"	10'-8"	28'-7"	8'-7"	35"	13.06	9'-9"	6'-7"	17'-9"	6'-7"	27"	5.41
*126"	23'-0"	8'-3"	26"	8.64	16'-3"	10'-10"	28'-8"	8'-8"	35"	13.34	10'-3"	6'-9"	17'-10"	6'-8"	27"	5.45
132"	23'-0"	8'-6"	28"	9.23	16'-6"	11'-0"	29'-7"	8'-9"	35"	13.94	10'-8"	6'-11"	17'-11"	6'-9"	27"	5.59
138"	24'-1"	8'-9"	30"	10.50	17'-0"	11'-2"	29'-8"	8'-10"	36"	14.24	10'-11"	7'-1"	18'-10"	6'-10"	28"	5.97
144"	25'-2"	9'-0"	32"	11.89	17'-2"	11'-4"	30'-7"	8'-11"	36"	14.84	11'-5"	7'-3"	18'-11"	6'-11"	28"	6.12
150"	26'-4"	9'-3"	34"	13.38	17'-5"	11'-6"	31'-5"	9'-0"	36"	15.42	11'-7"	7'-5"	19'-9"	7'-0"	28"	6.52
156"	27'-5"	9'-6"	36"	15.01	17'-11"	11'-8"	31'-7"	9'-1"	37"	15.83	11'-10"	7'-7"	20'-9"	7'-1"	29"	6.94
162"	28'-7"	9'-9"	38"	16.75	18'-1"	11'-10"	32'-5"	9'-2"	37"	16.43	12'-4"	7'-9"	20'-10"	7'-2"	29"	7.12
168"	29'-8"	10'-0"	40"	18.61	18'-7"	12'-0"	32'-6"	9'-3"	37"	16.78	12'-6"	7'-11"	21'-8"	7'-3"	29"	7.53
174"	30'-9"	10'-3"	42"	20.28	18'-9"	12'-2"	33'-4"	9'-4"	38"	17.43	12'-8"	8'-1"	22'-7"	7'-4"	30"	7.95
180"	31'-11"	10'-6"	43"	21.87	19'-3"	12'-4"	33'-5"	9'-5"	38"	17.78	12'-10"	8'-4"	23'-7"	7'-5"	30"	8.48
186"	33'-0"	10'-9"	44"	23.54	19'-6"	12'-6"	34'-5"	9'-6"	38"	18.49	13'-5"	8'-5"	23'-7"	7'-6"	30"	8.63
192"	34'-2"	11'-0"	45"	25.30	19'-8"	12'-8"	35'-3"	9'-7"	39"	19.19	13'-11"	8'-7"	23'-7"	7'-7"	31"	8.81
198"	35'-3"	11'-3"	46"	27.12	19'-11"	12'-10"	36'-3"	9'-8"	39"	19.95	14'-1"	8'-9"	25'-1"	7'-8"	31"	9.29
204"	36'-4"	11'-6"	47"	29.15	20'-5"	13'-0"	36'-3"	9'-9"	39"	20.30	14'-3"	8'-11"	25'-6"	7'-9"	31"	9.78
210"	37'-6"	11'-9"	48"	31.03	20'-7"	13'-2"	37'-2"	9'-10"	40"	21.05	14'-10"	9'-1"	25'-6"	7'-10"	32"	10.25
216"	38'-7"	12'-0"	49"	33.43	3"x1" Corrugations						15'-4"	9'-3"	25'-6"	7'-11"	32"	10.25
222"	39'-9"	12'-3"	50"	36.26	40"	31"	6'-6"	3'-7"	12"	0.70	15'-6"	9'-5"	26'-5"	8'-0"	32"	10.74
228"	40'-10"	12'-6"	51"	37.52	46"	36"	7'-8"	3'-9"	12"	0.85	15'-8"	9'-7"	27'-5"	8'-1"	33"	11.28
234"	42'-0"	12'-9"	52"	39.86	53"	41"	9'-0"	4'-0"	12"	1.06	15'-10"	9'-10"	28'-5"	8'-2"	33"	12.00
240"	43'-1"	13'-0"	53"	42.28	60"	46"	10'-0"	4'-4"	12"	1.27	16'-5"	9'-11"	28'-5"	8'-3"	33"	12.09
246"	44'-2"	13'-3"	54"	44.83	66"	51"	11'-0"	4'-8"	12"	1.54	16'-7"	10'-1"	29'-4"	8'-4"	34"	12.64
252"	45'-4"	13'-6"	55"	47.44	*73"	55"	11'-8"	5'-3"	12"	1.81	--	--	--	--	--	--

* Determine channel configuration for pipe sizes between end treatment "A" and end treatment "B" by 2:1 slopes passing through a point 6" below the top and at each side of the headwall. For end treatment "B", 2:1 slopes are tangent to pipe.

1 Top surface of 6" inlet headwall extension

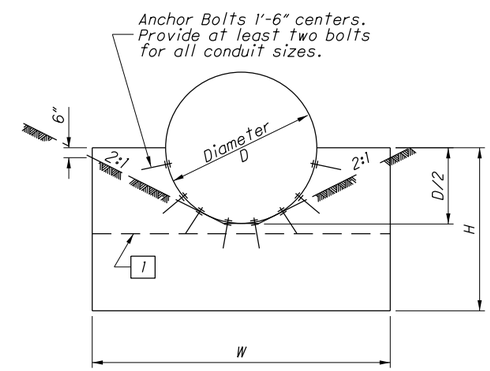

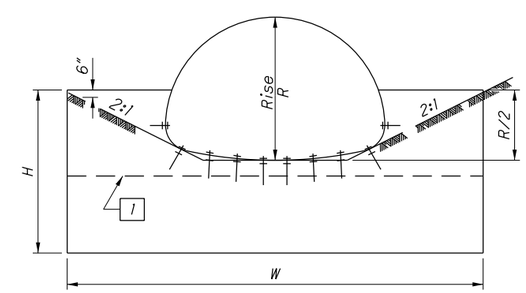

METAL PIPE END TREATMENT "B"
W/ ANCHOR BOLT OPTION

STATE OF OHIO DEPARTMENT OF TRANSPORTATION

STATE HYDRAULIC ENGINEER

REVISIONS
7/30/07
7/20/12
1/18/13

ROADWAY HYDRAULIC ENGINEER
Matt Cozzoli

OFFICE OF HYDRAULIC ENGINEERING

STANDARD HYDRAULIC CONSTRUCTION DRAWING

HALF-HEIGHT HEADWALLS FOR CORRUGATED METAL PIPE AND PLASTIC PIPE

SCD NUMBER
HW-2.1

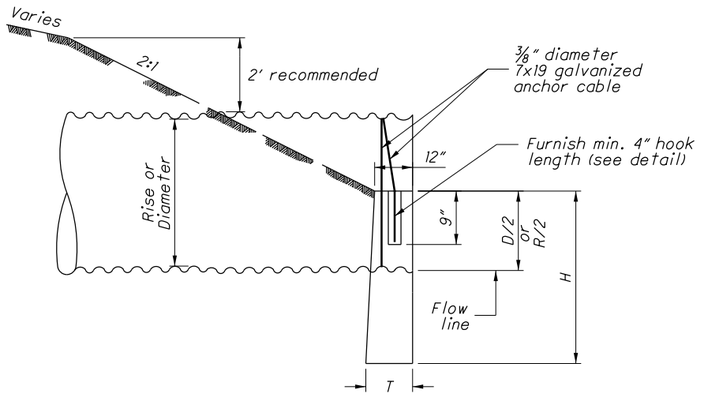

PLASTIC & METAL PIPE PROFILE
W/ ANCHOR CABLE OPTION

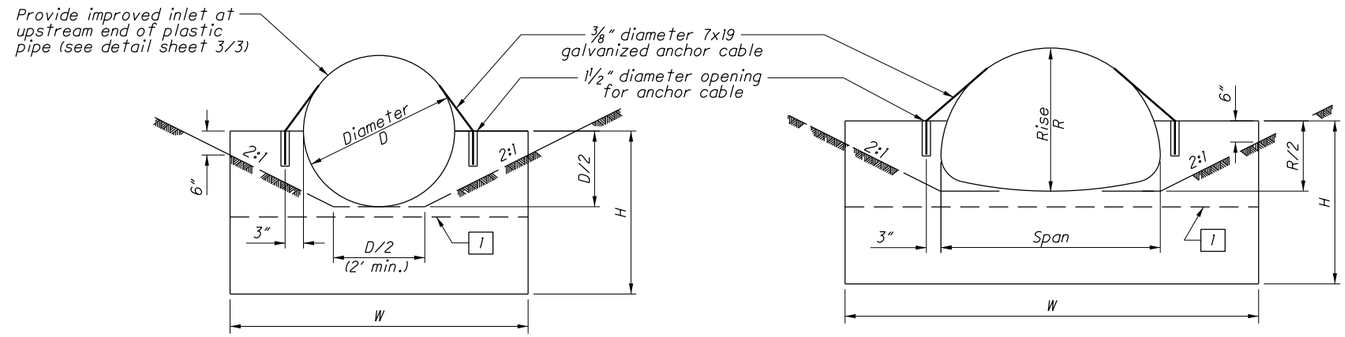

CIRCULAR

METAL PIPE-ARCH

PLASTIC & METAL PIPE END TREATMENT "A"
W/ ANCHOR CABLE OPTION

1 Top surface of 6" inlet headwall extension

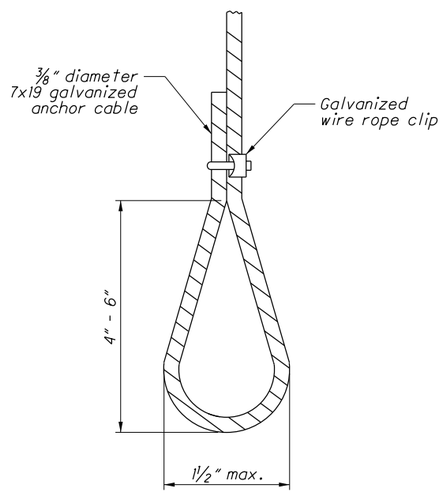

ANCHOR CABLE DETAIL

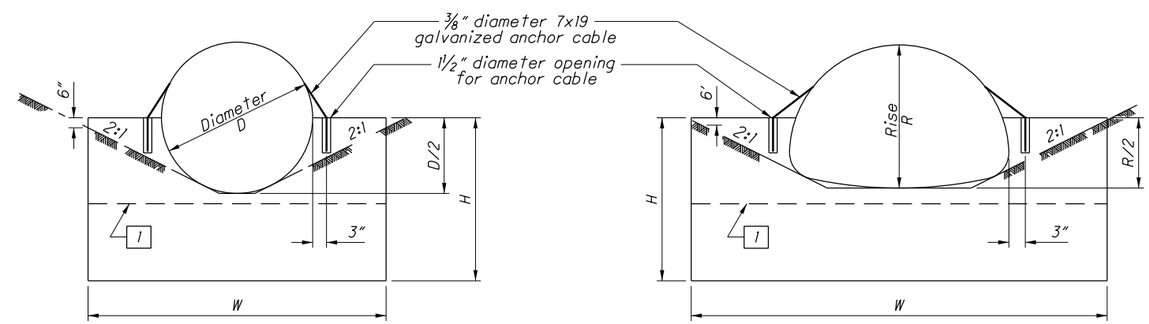

METAL PIPE END TREATMENT "B"
W/ ANCHOR CABLE OPTION

NOTES

Wrap galvanized anchor cable one time completely around the circumference of the conduit. Furnish hook at least 4" long at the ends of the anchor cable as shown above.

Cut galvanized anchor cable to length required.

Form or drill 1 1/2" diameter openings for anchor cable at locations shown. Alternatively, place anchor cable in wet concrete at the dimensions shown above to secure conduit to headwall.

Fill any openings made for anchor cables with grout after anchor cables are placed to a taut fit.

STATE OF OHIO DEPARTMENT OF TRANSPORTATION

STATE HYDRAULIC ENGINEER

REVISIONS
7/30/07
7/20/12
1/18/13

ROADWAY HYDRAULIC ENGINEER
Matt Cozzoli

OFFICE OF HYDRAULIC ENGINEERING

STANDARD HYDRAULIC CONSTRUCTION DRAWING

HALF-HEIGHT HEADWALLS FOR CORRUGATED METAL PIPE AND PLASTIC PIPE

SCD NUMBER
HW-2.1

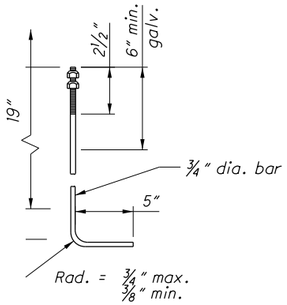

ANCHOR BOLT

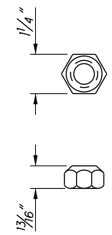

NUT
(ASTM A 325 and A 153)

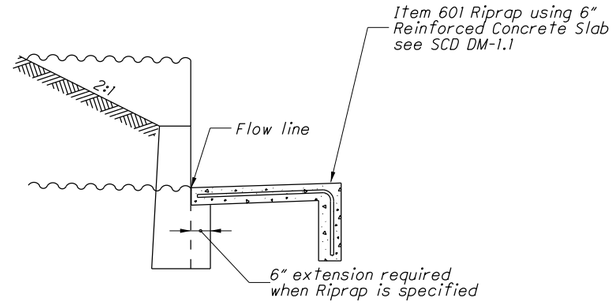

INLET CHANNEL PROTECTION DETAIL

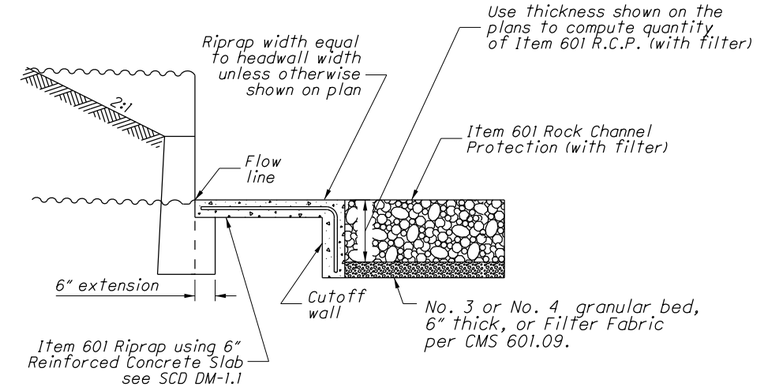

OUTLET CHANNEL PROTECTION DETAIL

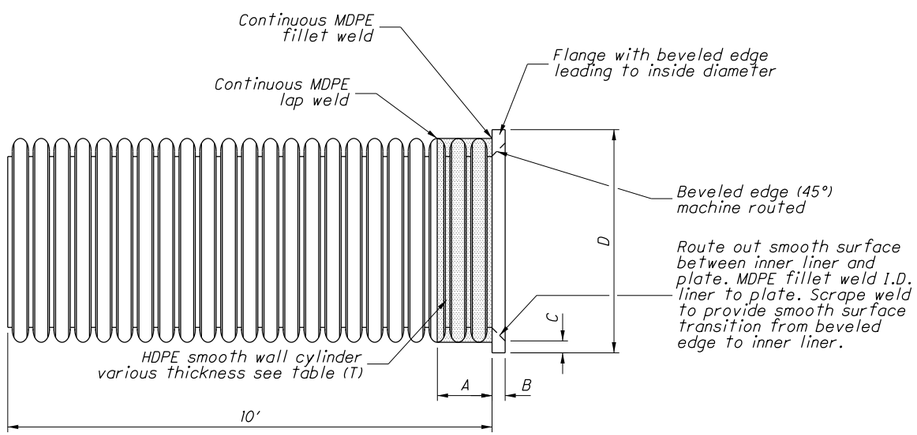

HDPE IMPROVED INLET - TYPE A CONDUITS

PIPE SIZE	A	B	C	D	T
12 in.	6.00 in.	0.50 in.	1.00 in.	15.15 in.	0.13 in.
15 in.	6.00 in.	0.63 in.	1.26 in.	18.73 in.	0.19 in.
18 in.	6.00 in.	0.75 in.	1.50 in.	22.57 in.	0.25 in.
24 in.	8.00 in.	1.00 in.	2.00 in.	30.08 in.	0.25 in.
30 in.	8.00 in.	1.25 in.	2.50 in.	37.50 in.	0.38 in.
36 in.	10.00 in.	1.50 in.	3.00 in.	45.00 in.	0.38 in.
42 in.	10.00 in.	1.75 in.	3.50 in.	51.90 in.	0.38 in.
48 in.	10.00 in.	2.00 in.	4.00 in.	59.60 in.	0.38 in.
60 in.	12.00 in.	2.50 in.	5.00 in.	74.50 in.	0.38 in.

NOTES

GENERAL: Provide a riprap reinforced concrete slab according to SCD DM-1.1 if the pipe is depressed or it is specified in the plan. Payment for the slab is made per square yard of **Item 601 Riprap Using 6" Reinforced Concrete Slab** and includes the cost of the cutoff wall.

This drawing is for cast-in-place half-height concrete headwalls. When furnishing precast half-height headwalls, conform to pre-approved designs on file with the Office of Materials Management. Precast half-height headwalls are only approved for round conduits with a maximum conduit diameter of 78". When precast headwalls are furnished, provide openings for the anchor cable as shown and fill with grout after placement of the anchor cable. If anchor bolts are to be used with a precast headwall, fill the anchor cable openings with grout.

CONCRETE: Use 4000 psi compressive strength concrete for headwall. Concrete quantities are based on headwalls without the 6" extension under the channel protection.

ANCHOR BOLTS: Furnish bolts (see detail sheet 2/3) that meet ASTM A 307 for anchoring both ends of metal pipe. The top 6" min. of the bolt must be galvanized according to ASTM A 153. Cost of anchors is included in the price bid per foot of Item 611.

Headwall dimensions are based on end treatment "A" for pipe sizes up to and including 120", 71"x47", and 66"x51", and on end treatment "B" for sizes over and including 132", 13'-3"x9'-4", and 7'-3"x5'-3".

PLASTIC PIPE: Plastic pipe may not be available in all the sizes specified on this drawing.

ANCHOR CABLE: Furnish anchor cable (see detail sheet 2/3) that meets ASTM A 603 for anchoring both ends of plastic pipe. Wire rope clip must be galvanized according to ASTM A 153. Cost of anchor cable and wire rope clip is included in the unit price bid per foot of Item 611.

IMPROVED INLET FOR HDPE PIPE: Furnish improved inlet at upstream end of culverts and open-ended storm sewers using plastic pipe.

Use HDPE smooth cap and flange materials according to ASTM D 3350 345464C.

STATE OF OHIO DEPARTMENT OF TRANSPORTATION

STATE HYDRAULIC ENGINEER

REVISIONS
7/30/07
7/20/12
1/18/13

ROADWAY HYDRAULIC ENGINEER
Matt Cozzoli

OFFICE OF HYDRAULIC ENGINEERING

STANDARD HYDRAULIC CONSTRUCTION DRAWING

HALF-HEIGHT HEADWALLS FOR CORRUGATED METAL PIPE AND PLASTIC PIPE

SCD NUMBER
HW-2.1

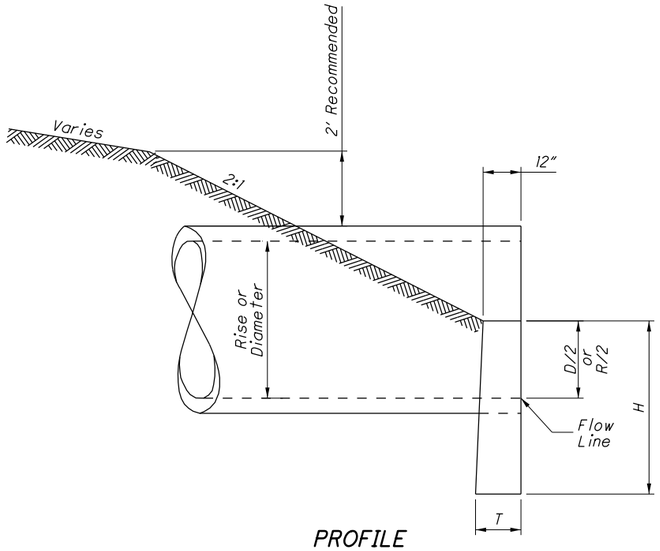

PROFILE

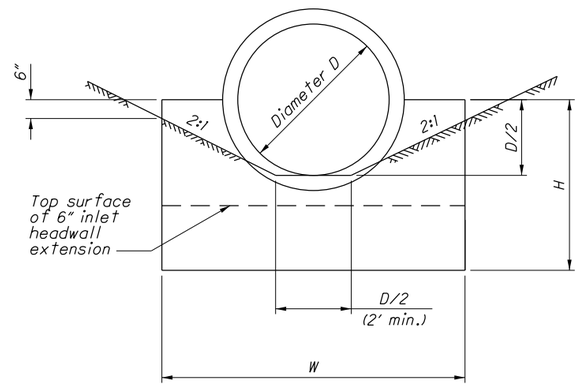

CIRCULAR

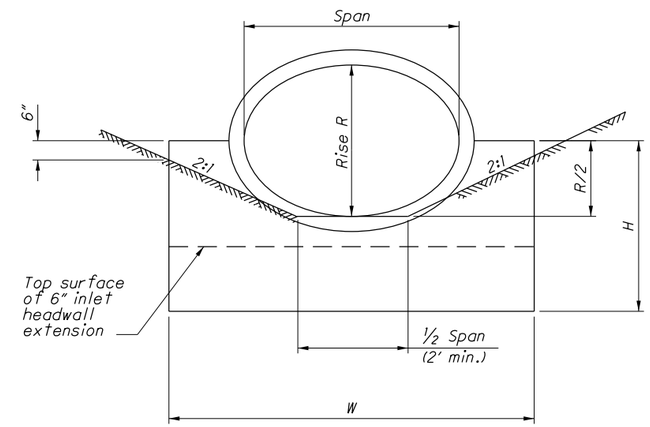

ELLIPTICAL

CONCRETE PIPE

See Sheet 2 of 2 for Pipe Tables and NOTES.

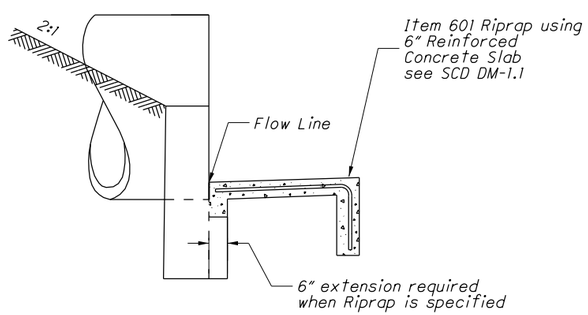

INLET CHANNEL PROTECTION DETAIL

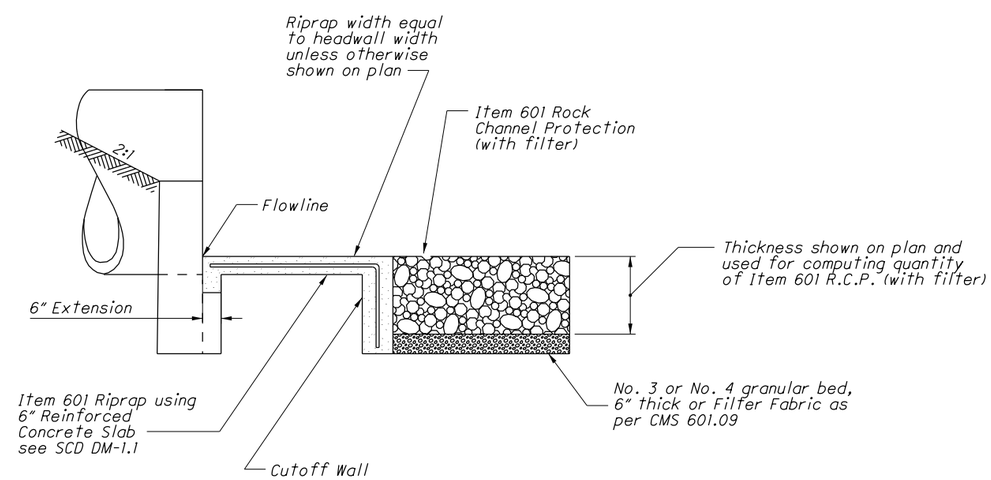

OUTLET CHANNEL PROTECTION DETAIL

STATE OF OHIO DEPARTMENT OF TRANSPORTATION

STATE HYDRAULIC ENGINEER

REVISIONS
7/30/07
7/20/12
1/18/13

ROADWAY HYDRAULIC ENGINEER
Matt Cozzoli

OFFICE OF HYDRAULIC ENGINEERING

STANDARD HYDRAULIC CONSTRUCTION DRAWING

HALF-HEIGHT HEADWALLS FOR CONCRETE PIPE

SCD NUMBER
HW-2.2

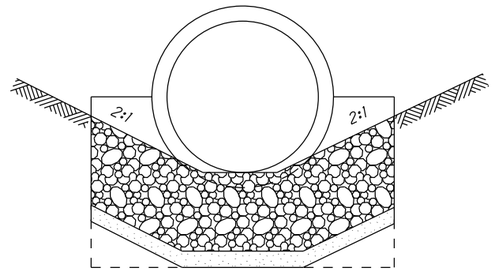

Riprap and rock channel protection width equal to headwall width unless otherwise shown on the plans. (Minimum width 4'-0".)

NOTES

GENERAL: Provide a riprap reinforced concrete slab according to SCD DM-1.1 if the pipe is depressed or it is specified in the plan. Payment for the slab is made per square yard of **Item 601 Riprap Using 6" Reinforced Concrete** Slab and includes the cost of the cutoff wall.

This drawing is for cast in place half-height concrete headwalls. When furnishing precast half-height headwalls, conform to pre-approved designs on file with the Office of Materials Management. Precast half-height headwalls are only approved for round conduits with a maximum conduit diameter of 78".

CONCRETE: Use 4000 psi compressive strength concrete for headwalls.

Concrete quantities are based on headwalls without the 6" extension under the channel protection.

C.I.P. HEADWALL FOR CONCRETE PIPE (English)

CIRCULAR					ELLIPTICAL					
D	W	H	T	Conc. cu. yds.	Span	Rise	W	H	T	Conc. cu. yds.
12"	2'-0"	3'-0"	12"	0.20	--	--	--	--	--	--
15"	2'-6"	3'-2"	12"	0.25	--	--	--	--	--	--
18"	3'-0"	3'-3"	12"	0.31	23"	14"	3'-0"	3'-2"	12"	0.29
21"	3'-6"	3'-4"	12"	0.37	30"	19"	3'-7"	3'-4"	12"	0.35
24"	4'-0"	3'-6"	12"	0.43	34"	22"	3'-11"	3'-5"	12"	0.38
27"	4'-6"	3'-8"	12"	0.49	38"	24"	4'-6"	3'-6"	12"	0.44
30"	5'-0"	3'-9"	12"	0.56	42"	27"	4'-8"	3'-7"	12"	0.45
33"	5'-6"	3'-10"	12"	0.62	45"	29"	5'-2"	3'-8"	12"	0.49
36"	6'-0"	4'-0"	12"	0.69	49"	32"	5'-5"	3'-10"	12"	0.52
39"	6'-6"	4'-2"	12"	0.77	53"	34"	5'-11"	4'-0"	14"	0.66
42"	7'-0"	4'-3"	12"	0.84	60"	38"	6'-10"	4'-2"	14"	0.82
48"	8'-0"	4'-6"	14"	1.09	68"	43"	8'-0"	4'-4"	16"	1.01
54"	9'-3"	4'-9"	14"	1.32	76"	48"	9'-2"	5'-0"	16"	1.34
60"	10'-6"	5'-6"	16"	1.93	83"	53"	10'-4"	5'-2"	18"	1.65
66"	11'-9"	5'-9"	18"	2.42	91"	58"	11'-6"	5'-5"	18"	1.97
72"	13'-0"	6'-0"	18"	2.77	98"	63"	12'-7"	5'-7"	20"	2.38
78"	14'-3"	6'-3"	20"	3.37	106"	68"	13'-9"	5'-10"	20"	2.69
84"	15'-6"	6'-6"	22"	4.05	113"	72"	14'-9"	6'-0"	22"	3.14
90"	16'-9"	6'-9"	22"	4.51	121"	77"	15'-11"	6'-3"	22"	3.49
96"	18'-0"	7'-0"	24"	5.31	128"	82"	17'-0"	6'-5"	24"	4.04
102"	19'-3"	7'-3"	26"	6.20	136"	87"	18'-2"	6'-8"	24"	4.84
108"	20'-6"	7'-6"	26"	6.78	143"	92"	19'-4"	6'-10"	26"	5.12
114"	21'-9"	7'-9"	28"	7.81	151"	97"	20'-6"	7'-1"	26"	5.42
120"	23'-0"	8'-0"	30"	8.93	166"	106"	22'-7"	7'-5"	28"	6.60
126"	24'-3"	8'-3"	30"	9.57	180"	116"	24'-10"	7'-10"	30"	7.99
132"	25'-6"	8'-6"	32"	10.84	--	--	--	--	--	--
144"	28'-8"	9'-0"	34"	13.00	--	--	--	--	--	--

STATE OF OHIO DEPARTMENT OF TRANSPORTATION

STATE HYDRAULIC ENGINEER

REVISIONS
7/30/07
7/20/12
1/18/13

ROADWAY HYDRAULIC ENGINEER
Matt Cozzoli

OFFICE OF HYDRAULIC ENGINEERING

STANDARD HYDRAULIC CONSTRUCTION DRAWING

HALF-HEIGHT HEADWALLS FOR CONCRETE PIPE

SCD NUMBER
HW-2.2