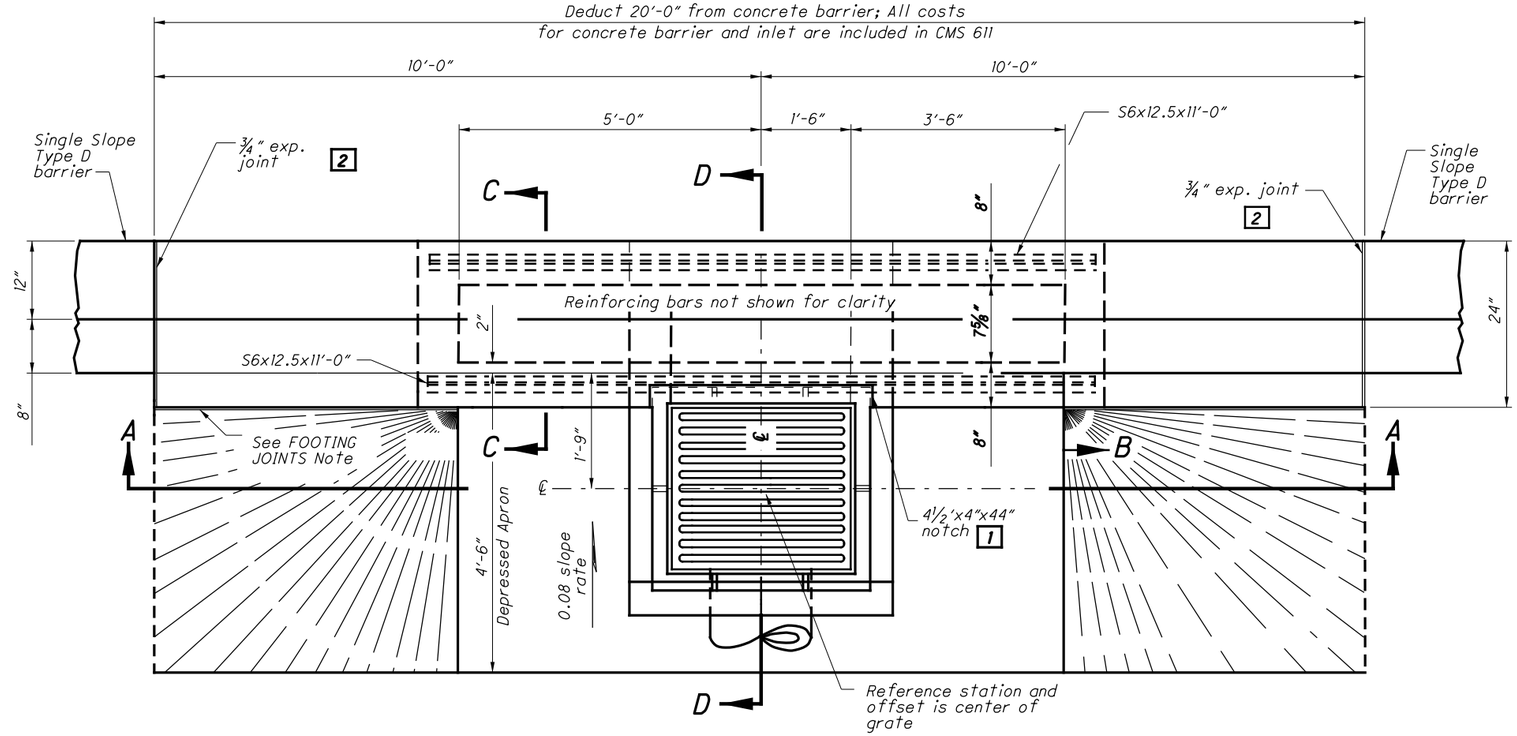

PLAN VIEW

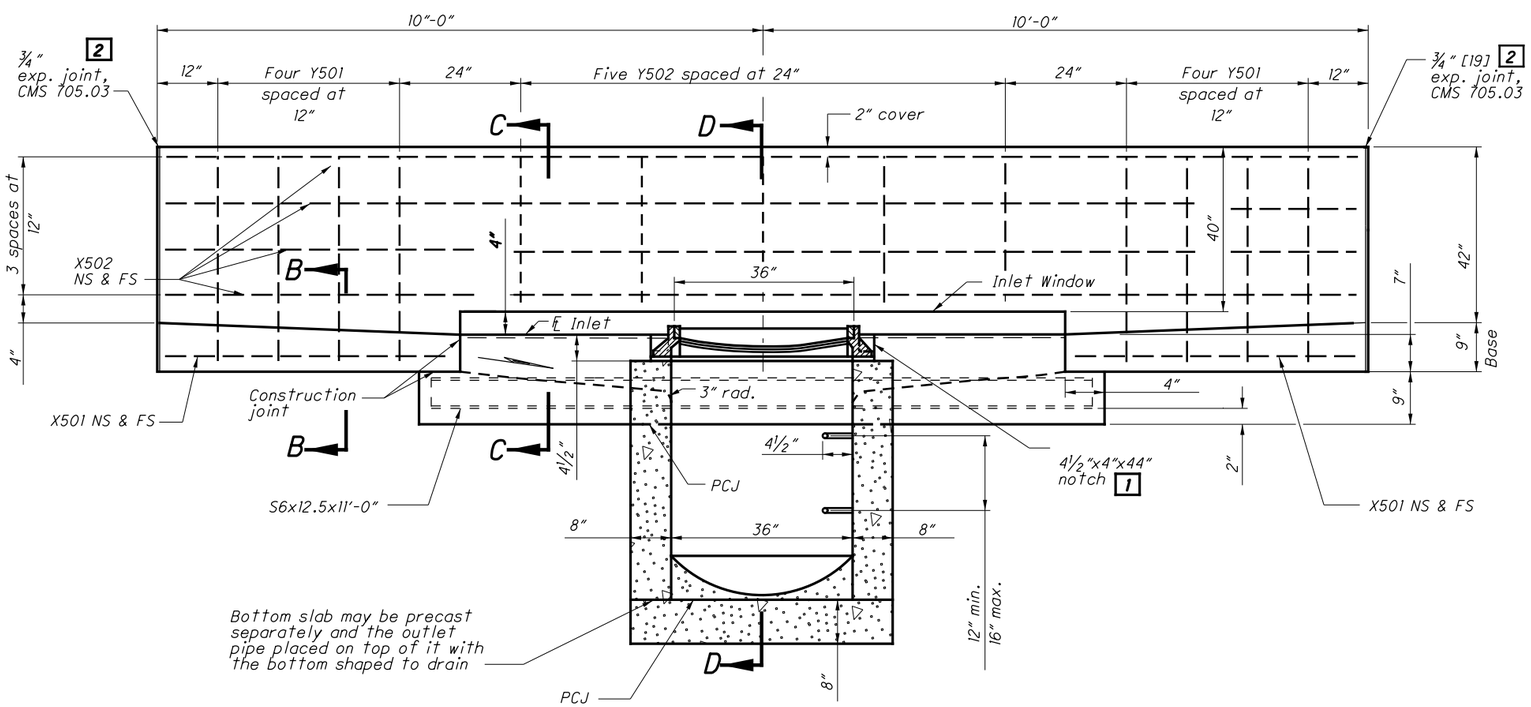

SECTION A-A

NOTES

GENERAL: For details of Type D concrete barriers, see SCD RM-4.5.

WALLS: The walls between the bottom slab and the upper permissible construction joint may be built of brick, concrete, concrete block, or cast-in-place concrete, 8" nominal thickness for depths of 12' or less. Precast walls have a minimum thickness of 6" and are reinforced sufficiently to permit shipping and handling without damage. The unit above the permissible construction joint may be precast or cast-in-place.

CONCRETE: Provide 4000 psi compressive strength concrete for cast-in-place structures. All precast concrete must meet the requirements of CMS 706.13. Mark the inlet number on the structure. Seal the exposed concrete surfaces of the barrier per Item 512 when specified in the plans.

REINFORCING STEEL: Provide epoxy coated reinforcing steel in accordance with CMS 509.09.

FOOTING JOINTS: Provide a sealed joint with the vertical walls between the barrier footing and a concrete pavement or concrete base as detailed on SCD RM-4.3.

CASTINGS: The minimum weight of frame and cover is 540 lbs. See Sheet 2 for casting details.

Lighter weight frames and grates that meet the requirements of CMS 711.14 may also be provided. Grate openings and dimensions may not differ from those shown unless otherwise shown in the plans.

STEPS: Provide steps according to SCD MH-1.1

GRATE LOCATION: In superelevated curves or at other locations where there is unequal discharge from the directional roadways, locate the inlet grating in the roadway which discharges the major flow.

INLETS OVER 12 FEET IN DEPTH: Provide precast or cast-in-place concrete for inlets over 12 feet in depth. Reinforce with #4 bars on 12" centers both vertically and horizontally with 2" clearance from the inside wall face.

OPENINGS: Pipe openings may be no greater than the outside diameter of the pipe being supplied plus 2" when fabricated or field cut. Fill any voids per CMS 601.

PCJ: Permissible construction joint

PAYMENT: Payment will be made at the unit price bid per Each for Item 611 - Inlet No. 3 for Single Slope Barrier, Type D and includes all materials, reinforcing steel, castings, labor and incidentals required to construct the inlet as shown. Sealing of exposed concrete and sealing of the barrier will be paid for under Item 512 when specified in the plans.

LEGEND

1 After casting is placed, fill notch with 4000 psi compressive strength concrete.

2 Provide a 1½" minimum exp. joint in concrete pavement or concrete shoulders.

See Sheet 2 for other sections and steel information.

STATE OF OHIO DEPARTMENT OF TRANSPORTATION

STATE HYDRAULIC ENGINEER

REVISIONS
7-16-04
7-15-05
7-20-12
1-18-13

ROADWAY HYDRAULIC ENGINEER
Matt Cozzoli

OFFICE OF HYDRAULIC ENGINEERING

STANDARD HYDRAULIC CONSTRUCTION DRAWING

INLET No. 3 FOR SINGLE SLOPE BARRIER, TYPE D

SCD NUMBER
I-2.3

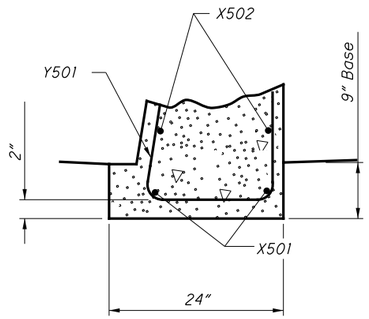

PARTIAL SECTION B-B

See Sheet 1

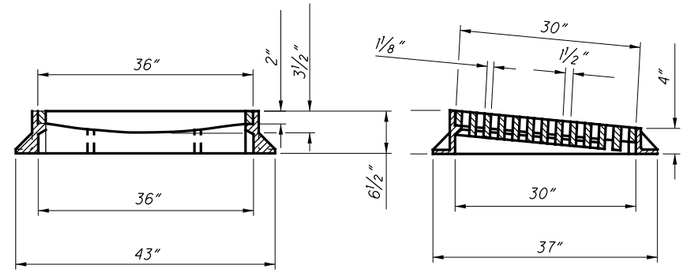

CASTING DETAILS

STEEL LIST (For Estimating Purposes Only)										
INLET No. 3	X501 #5		X502 #5		Y501 #5		Y502 #5		S6x12.5	
	Straight		Straight		Bent		Bent			
	No.	Length	No.	Length	No.	Length	No.	Length	No.	Length
Type D	4	4'-8"	8	19'-8"	8	8'-8"	5	7'-0"	2	11'-0"

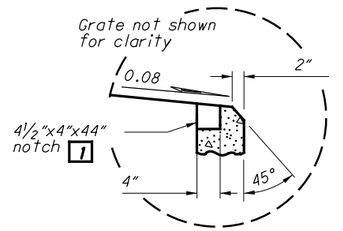

ALTERNATE SPILLWAY DETAIL

See SECTION D-D

For NOTES, LEGEND, Plan and Section A-A, see Sheet 1.

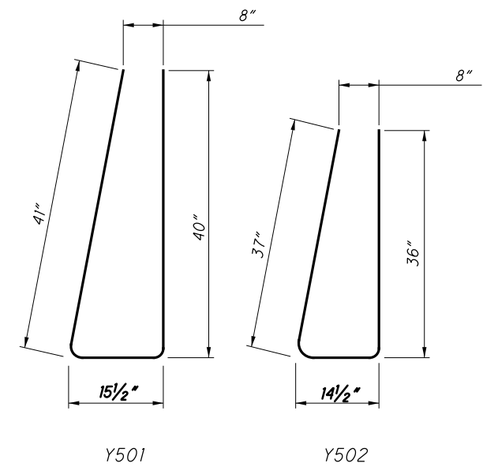

BENDING DIAGRAMS

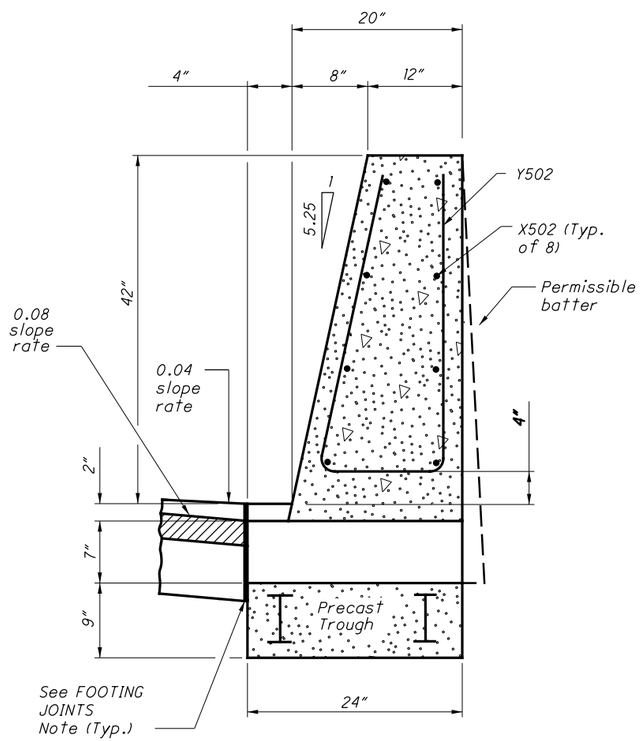

SECTION C-C

See Sheet 1

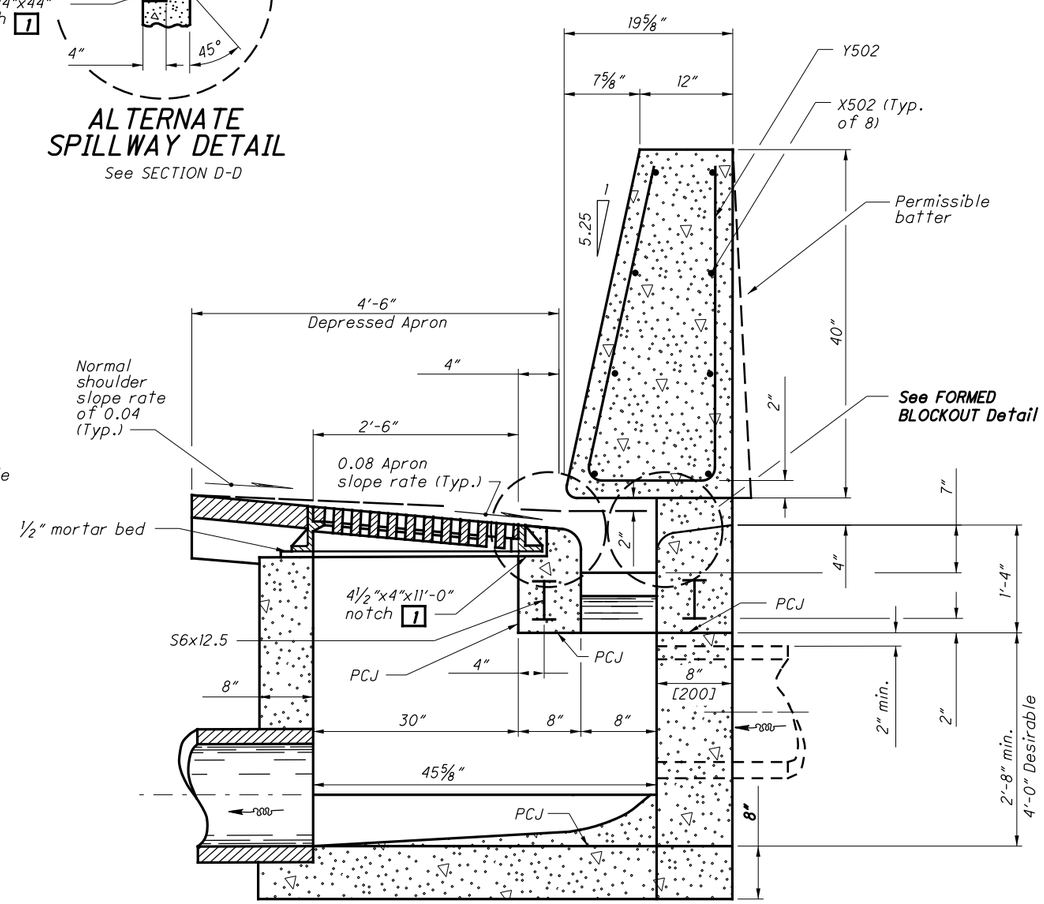

SECTION D-D

See Sheet 1

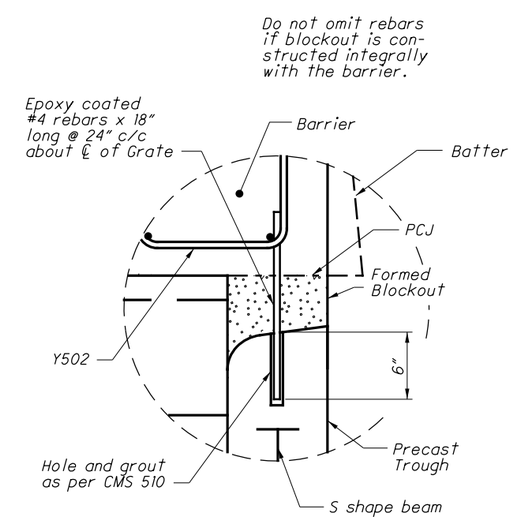

FORMED BLOCKOUT DETAIL

STATE OF OHIO DEPARTMENT OF TRANSPORTATION

STATE HYDRAULIC ENGINEER

REVISIONS
7-16-04
7-15-05
7-20-12
1-18-13

ROADWAY HYDRAULIC ENGINEER
Matt Cozzoli

OFFICE OF HYDRAULIC ENGINEERING

STANDARD HYDRAULIC CONSTRUCTION DRAWING

INLET No. 3 FOR SINGLE SLOPE BARRIER, TYPE D

SCD NUMBER
I-2.3

2 / 2