TYPE 1

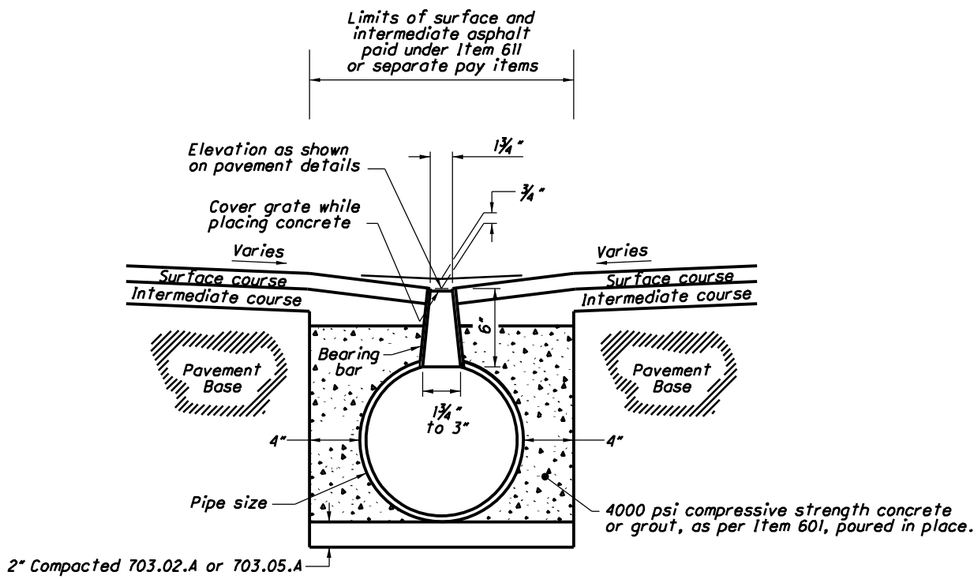

SECTION A-A

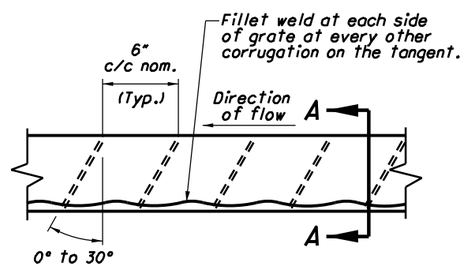

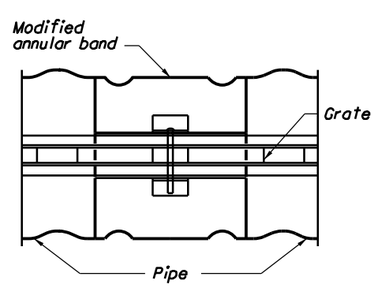

PLAN

NOTE: Provide a continuous bearing bar by means of a slot or plate through the joint.

----" SLOTTED DRAIN, TYPE 1

(Refer to Sample Plan Note D120)

TYPE 2

NOTE: The asphalt surface course shall be placed ¼" higher than the outside edge of the concrete surface.

[1] Surface on the side shall be formed to provide a straight edge for the top 3".

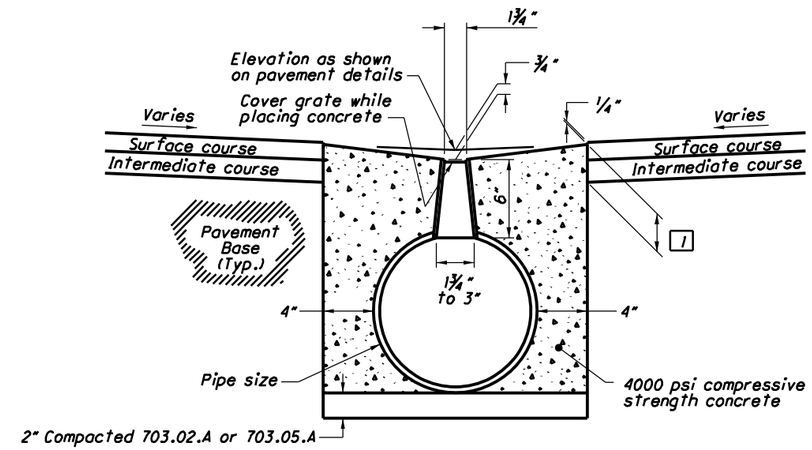

SECTION B-B

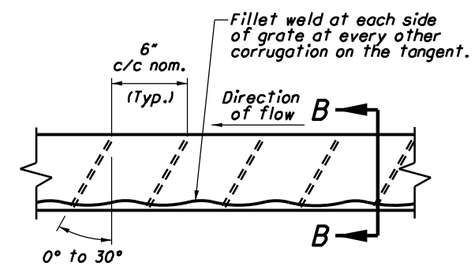

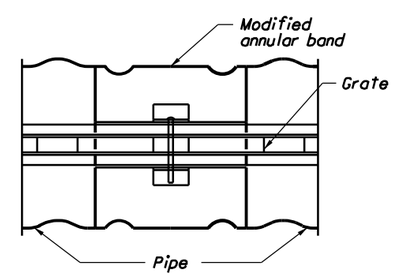

PLAN

NOTE: Provide a continuous bearing bar by means of a slot or plate through the joint.

----" SLOTTED DRAIN, TYPE 2

(Refer to Sample Plan Note D120)

STATE OF OHIO DEPARTMENT OF TRANSPORTATION

STATE HYDRAULIC ENGINEER

REVISIONS

7-20-01
10-19-12
1-18-13

ROADWAY HYDRAULIC ENGINEER
Matt Cozzoli

OFFICE OF HYDRAULIC ENGINEERING

STANDARD HYDRAULIC CONSTRUCTION DRAWING

SLOTTED DRAINS

SCD NUMBER
DM-1.3

1 / 1