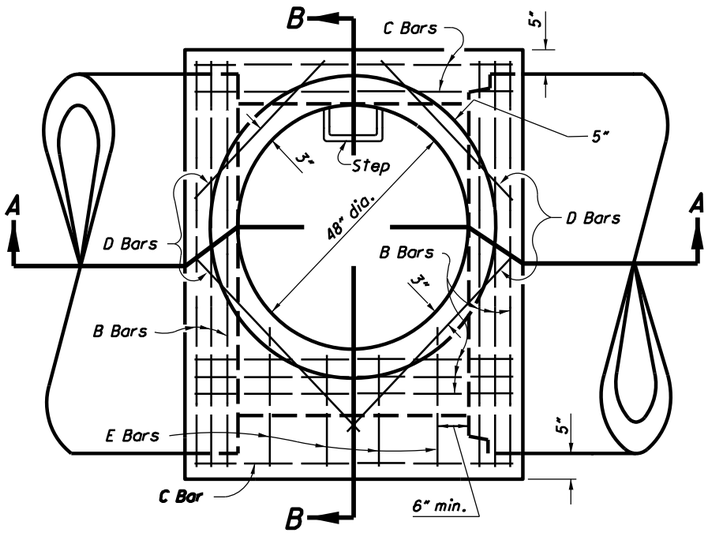

PLAN VIEW

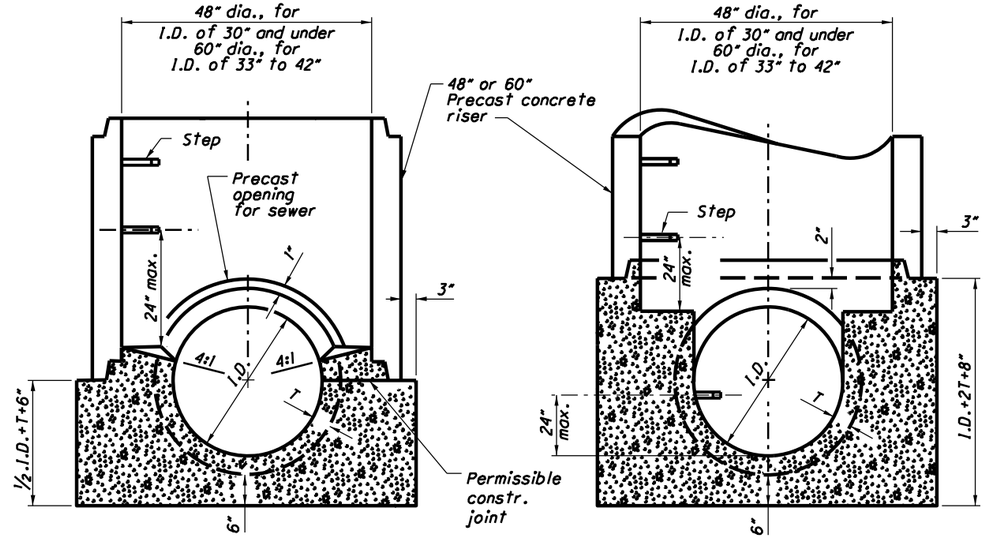

MANHOLE BASE ON SEWER 42" AND UNDER

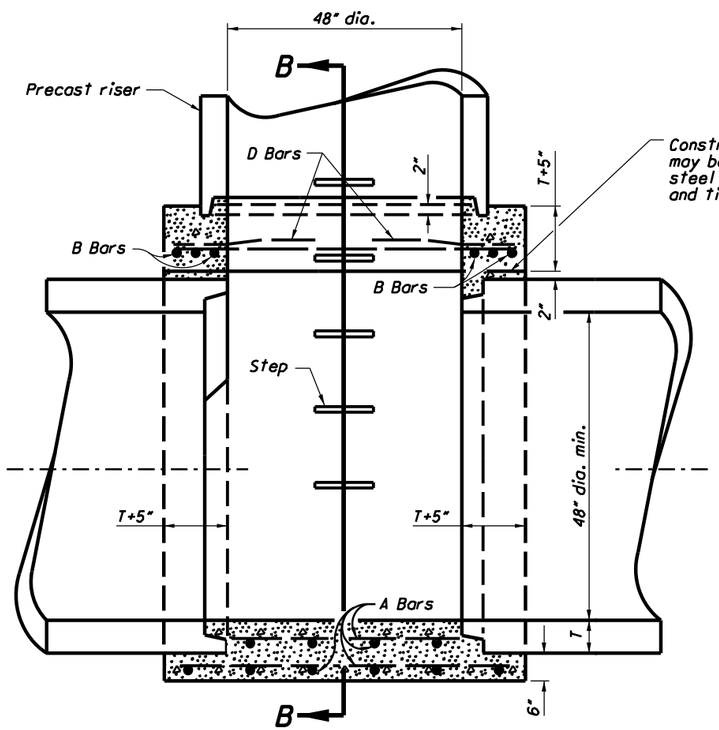

SECTION A-A

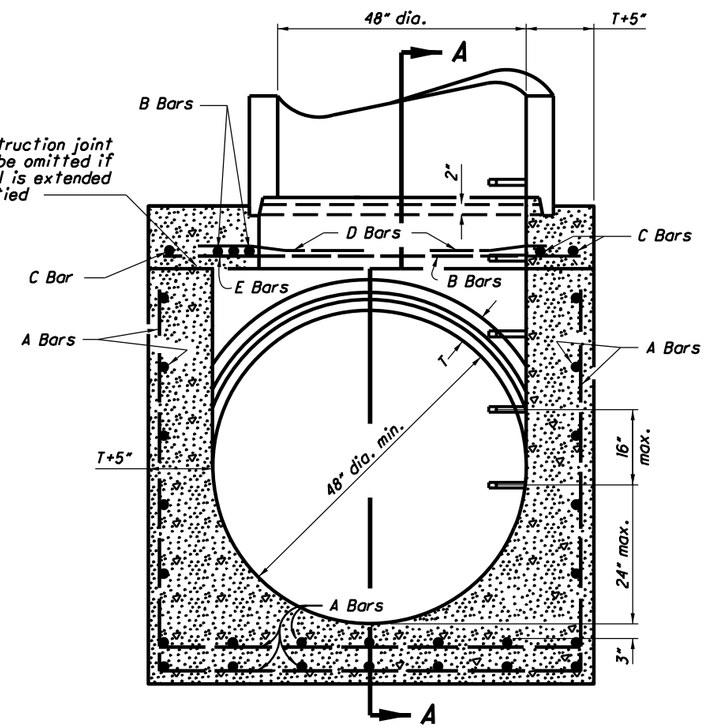

SECTION B-B

MANHOLE BASE ON SEWER 42" AND OVER

NOTES

MANHOLE: Manhole No. 5 consists of a base or bottom as detailed here and other manhole components as detailed or specified on **SCD MH-1.2.** Instead of the tongue and groove junction between the riser and the base, the base may have a flat surface and the riser may have a square end set in a bed of mortar on the base.

OPENINGS: Provide prefabricated openings for 42" and under inlet and outlet sewer pipes in the riser section unless the base is built to an elevation 2" above the manhole top of the inlet and outlet pipes.

CONCRETE: Use 4000 psi compressive strength concrete for the bases or meet the requirements of CMS 706.13. The bases may be precast or cast-in-place. If precast, provide a base on sewers 42" and under with sufficient steel reinforcement to permit shipping and placement without damage to the base. Reinforce the base on sewers 48" and over as shown.

STEPS: Provide steps that meet the requirements set forth on **SCD MH-1.1.**

T = Wall thickness of intercepting sewer pipe

REINFORCING STEEL LIST

BAR	SPACING	BAR SIZES FOR SEWERS		
		48" to 60"	66" to 78"	84" to 96"
A	12" c/c both ways	#5	#6	#7
B	3" c/c both ways	#5	#6	#7
C	as shown	#5	#6	#7
D	as shown	#5	#5	#5
E	12" c/c	#5	#5	#5

Included for estimating purposes only. The cost of furnishing and placing all reinforcing steel is included in Item 611 for payment.

THIS DRAWING REPLACES MH-1.3M DATED 9-6-95.

STATE OF OHIO DEPARTMENT OF TRANSPORTATION

STATE HYDRAULIC ENGINEER

REVISIONS
7-20-01
7-20-12
1-18-13

ROADWAY HYDRAULIC ENGINEER
Matt Cozzoli

OFFICE OF HYDRAULIC ENGINEERING

STANDARD HYDRAULIC CONSTRUCTION DRAWING

MANHOLE No. 5

SCD NUMBER
MH-1.3

1 / 1