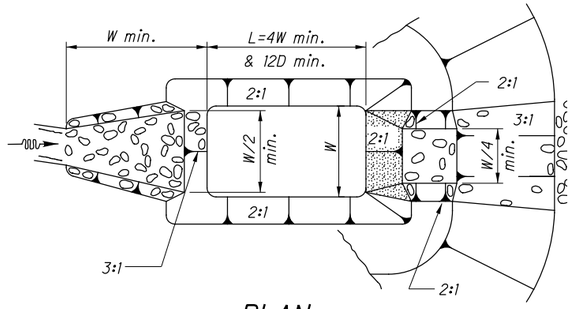

PLAN

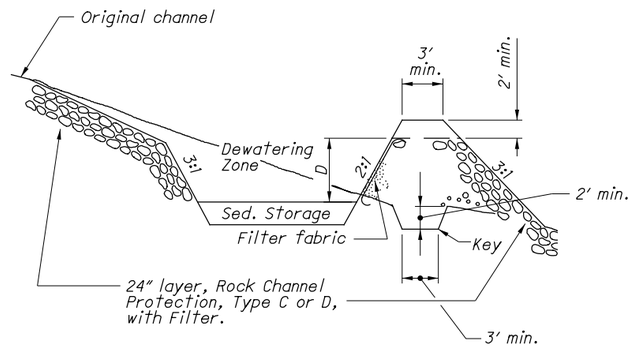

PROFILE

SEDIMENT DAM

(Drainage Area of Less than 5 Acres)

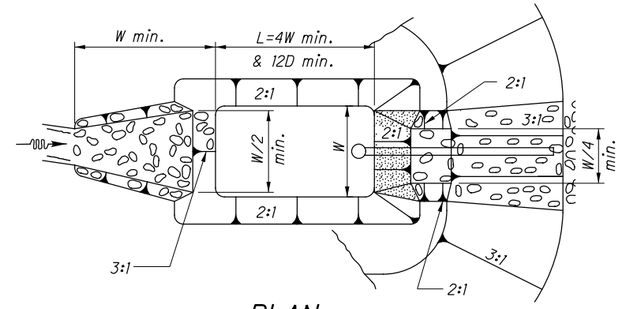

PLAN

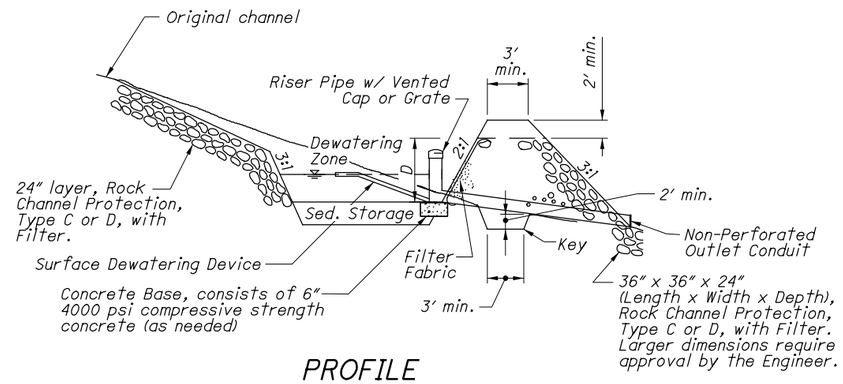

PROFILE

SEDIMENT DAM

(Drainage Area of 5 Acres or More)

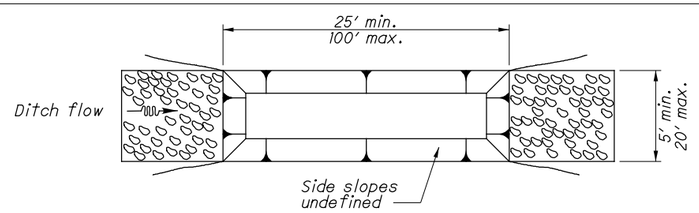

PLAN

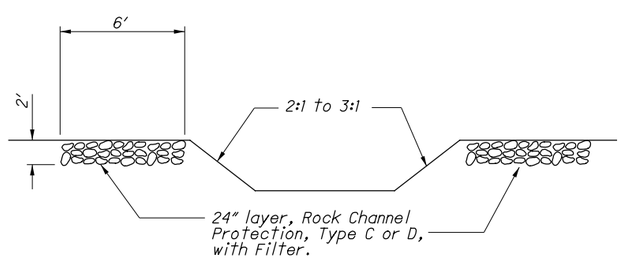

PROFILE

SEDIMENT BASIN

(Drainage Area of Less than 5 Acres)

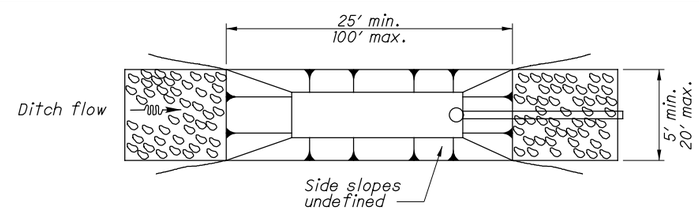

PLAN

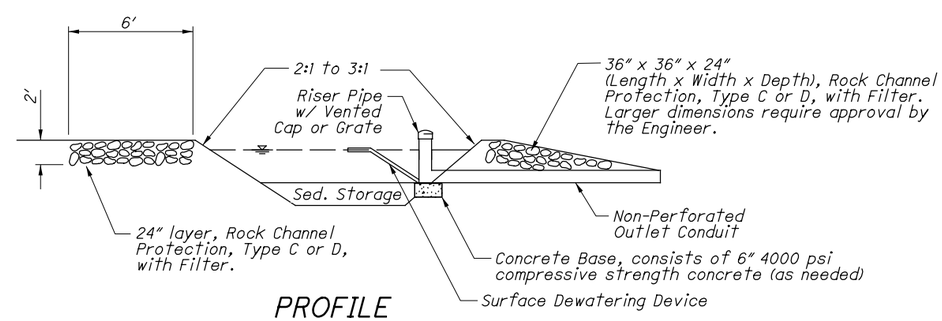

PROFILE

SEDIMENT BASIN

(Drainage Area of 5 Acres or More)

NOTES

MATERIAL:

Furnish materials conforming to Item 203, Embankment, and Item 601, Rock Channel Protection, Type C or D with filter. Furnish construction fence consisting of 4'-0" high plastic fence with 6' long metal fence posts.

CONSTRUCTION:

Construct the Basin and Dams as detailed. Construct the construction fence in urban areas or in high pedestrian traffic areas. Construct the fence to completely surround the sediment basin or dam. Place the fence post on 8' centers, 2' deep. Securely attach the plastic construction fence to the fence post.

PAYMENT:

The Department will pay for accepted quantities at the prices shown in Appendix F of Supplemental Specification 832 (SS832) for the following items:

- Sediment Basins and Dams
- Rock Channel Protection, Type C or D, with Filter

All items shown on this Standard Construction Drawing that are required for construction that are not specifically identified in SS832 Appendix F are considered incidental.

RISER PIPE:

Use schedule 40 Polyvinyl Chloride Conduit.

SURFACE DEWATERING DEVICE:

Furnish surface dewatering device as required by the ODNR Rainwater and Land Development Manual.

STATE OF OHIO DEPARTMENT OF TRANSPORTATION

STATE HYDRAULIC ENGINEER

REVISIONS
4-29-99
7-19-02
11-26-08
4-17-09
7-20-12
1-18-13
7-19-13

ROADWAY HYDRAULIC ENGINEER
Matt Cozzoli

OFFICE OF HYDRAULIC ENGINEERING

STANDARD HYDRAULIC CONSTRUCTION DRAWING

SEDIMENT AND EROSION CONTROLS

SCD NUMBER
DM-4.3

I:\hy\Proposed File Structure\Standard Drawings\Proposed\DM\dm43_071913.dgn 4/17/2013 1:13:51 PM hyaryanh

DIKES AND SLOPE DRAINS

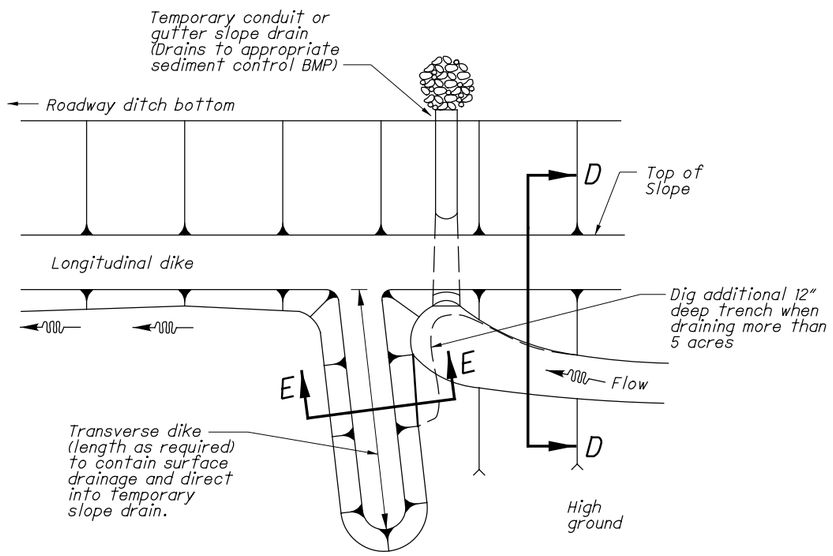

PLAN VIEW

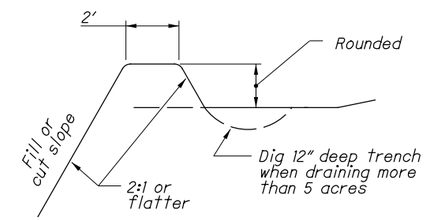

SECTION D-D

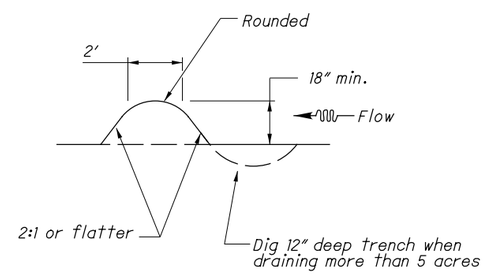

SECTION E-E

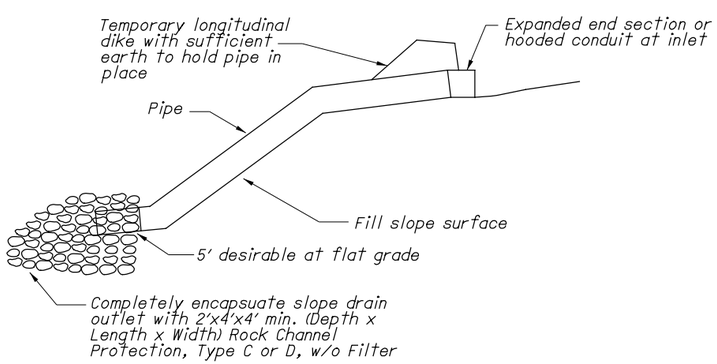

CONDUIT SLOPE DRAIN

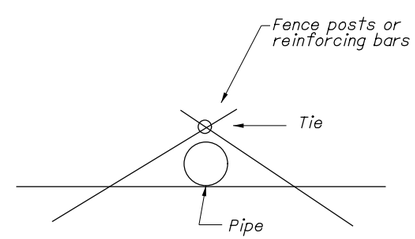

TIE-DOWN SLOPE DRAIN

NOTES

MATERIAL:

Furnish materials conforming to Item 203, Embankment, and Item 601, Rock Channel Protection, Type C or D, without filter.

Furnish the following for the slope drains: corrugated steel pipe, corrugated or smooth plastic pipe, reinforcing bars or fence posts.

CONSTRUCTION:

Construct as detailed. Compact the dike to 85% of Standard Proctor.

Use reinforcing bars or fence posts to tie down the slope drains and to keep the pipe from moving.

Ensure that the water entering the slope drain inlet does not erode or degrade the dike section containing the temporary conduit.

PAYMENT:

The Department will pay for accepted quantities at the prices shown in Appendix F of Supplemental Specification 832 (SS832) for the following items:

- Slope Drains
- Dikes
- Rock Channel Protection, Type C or D, Without Filter

All items shown on this Standard Construction Drawing that are required for construction that are not specifically identified in SS832 Appendix F are considered incidental.

TEMPORARY SLOPE DRAINS RECOMMENDED SIZES

AREA in acres	PIPE SIZES	
	Smooth	Corrugated
0-4	6"	6"
4-8	8"	12"
8-12	10"	15"

STATE OF OHIO DEPARTMENT OF TRANSPORTATION

STATE HYDRAULIC ENGINEER

REVISIONS
4-29-99
7-19-02
11-26-08
4-17-09
7-20-12
1-18-13
7-19-13

ROADWAY HYDRAULIC ENGINEER
Matt Cozzoli

OFFICE OF HYDRAULIC ENGINEERING

STANDARD HYDRAULIC CONSTRUCTION DRAWING

SEDIMIENT AND EROSION CONTROLS

SCD NUMBER
DM-4.3