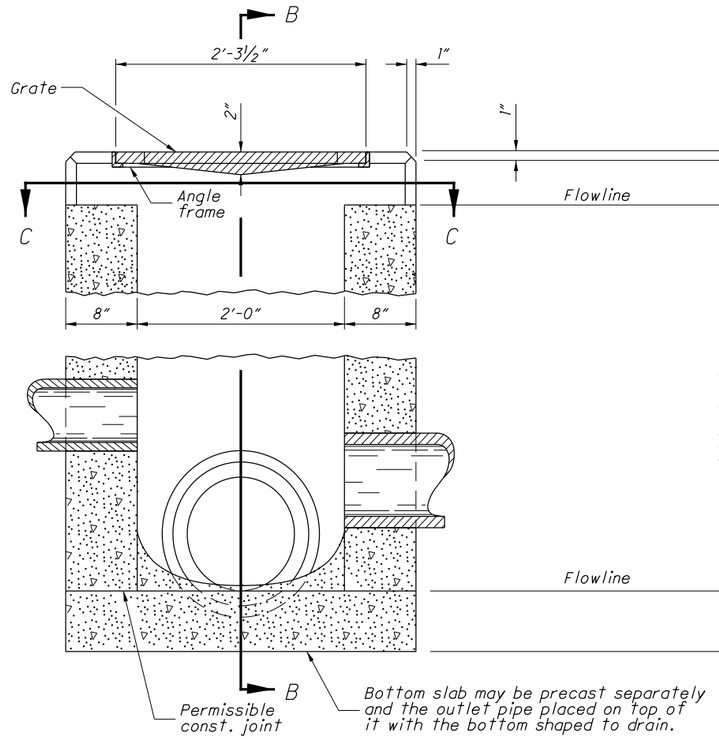

SECTION A-A

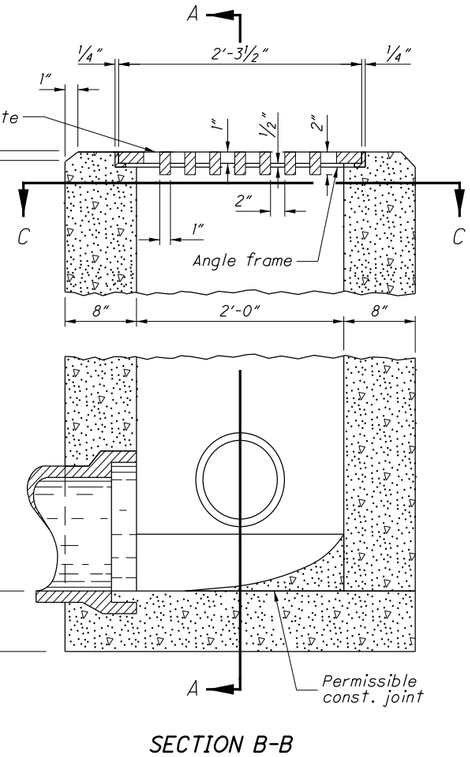

SECTION B-B

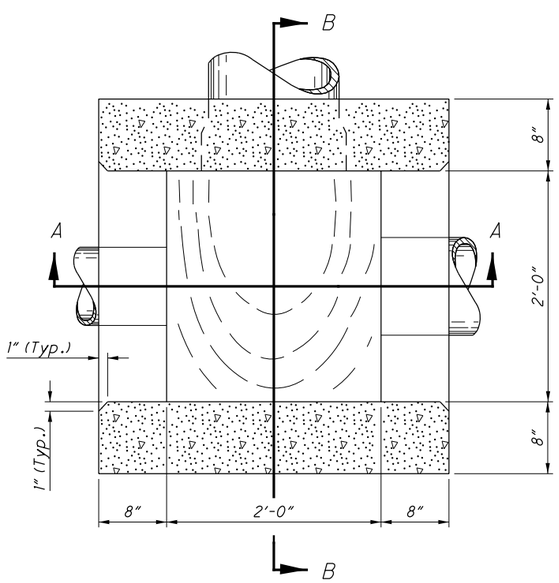

SECTION C-C

All grate edges to be rounded ¼" radii.

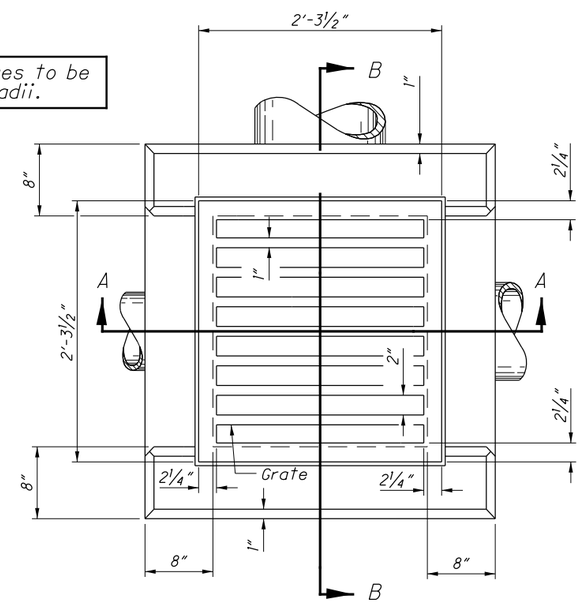

PLAN

CATCH BASIN No. 2-2A

NOTES

GENERAL: Catch Basins 2-2A and 2-2B are not intended for traffic bearing applications.

CATCH BASINS 2-2A &B: This sheet depicts Catch Basin 2-2A. See Sheet 2 of 2 for Catch Basin 2-2B.

GRATE AND FRAME: Furnish a design essentially the same and equally as strong as the one shown (see Construction Information table), or meet the requirements of CMS 711.14. Provide grate openings and dimensions as shown here unless otherwise shown in the plans.

Cast the following text into the top of the grate:

"DUMP NO WASTE" and **"DRAINS TO WATERWAY"**

Print text in bold, capital letters at least ½" high. "WATERWAY" may be substituted with "STREAM", "RIVER", "LAKE", etc. Actual placement and logo may vary per manufacturer.

WALLS: Construct brick or cast-in-place walls with a nominal 8" thickness. Provide precast walls at least 6" thick with sufficient reinforcing to permit shipping and handling without damage. Do not use brick above the flow line of the side opening for Type 2-2A.

CONCRETE: Use 4000 psi compressive strength for cast-in-place concrete. Meet the requirements of CMS 706.13 for all precast concrete and mark with the catch basin number.

PRECAST BASE: If a precast base is used, set it deep enough so that the top can be placed on the base to provide the grate elevation specified in the plans. Do not use brick layers to adjust the top elevation.

LOCATION AND ELEVATION: When given on the plans, location is the top center of the grate and the elevation is the flow line of the side inlet.

MINIMUM DEPTH: The minimum depth of CB No. 2-2A is the outside diameter (O.D.) of the outlet pipe plus 7".

OPENINGS: Obtain the Engineer's approval for any pipe openings greater than 4" from the outside of the pipe to the structure. Fill any voids per CMS 611

2-2A SIDE INLETS: Provide inlets on both sides of the No. 2-2A catch basin in sags and on upstream side only where the ditch has a continuous down grade past the catch basin. Do not use CB 2-2A within the Clear Zone. The flow line should be 4" to 6" below normal ditch returning to normal 10' to 15' each side of the inlet.

PAYMENT: All materials and labor, including excavation and backfilling, are paid for under **Item 611 - Catch Basin, No. 2-2A.**

CONSTRUCTION INFORMATION
Minimum weight of grate, 120 lbs. Minimum weight of frame, 40 lbs.

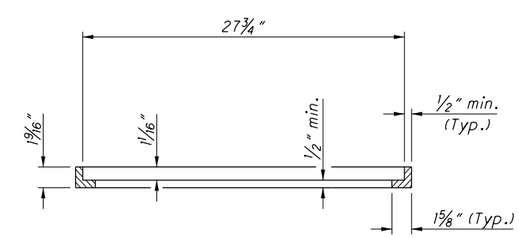

SECTION THRU ANGLE FRAME FOR STANDARD No. 2-2A CATCH BASIN

STATE OF OHIO DEPARTMENT OF TRANSPORTATION

STATE HYDRAULIC ENGINEER

REVISIONS
7-20-01
7-19-02
7-15-05
7-20-12
1-18-13

ROADWAY HYDRAULIC ENGINEER
Matt Cozzoli

OFFICE OF HYDRAULIC ENGINEERING

STANDARD HYDRAULIC CONSTRUCTION DRAWING

CATCH BASINS No's 2-2A & B

SCD NUMBER
CB-1.1

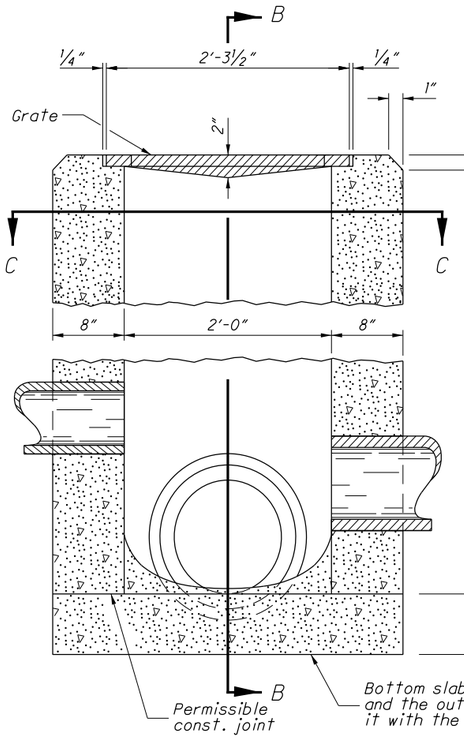

SECTION A-A

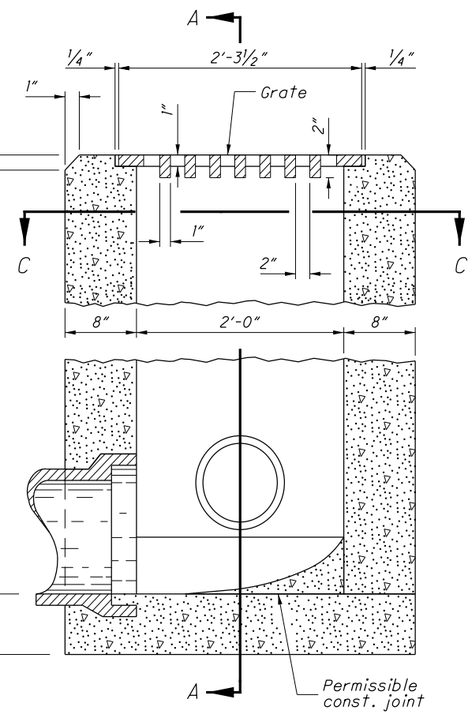

SECTION B-B

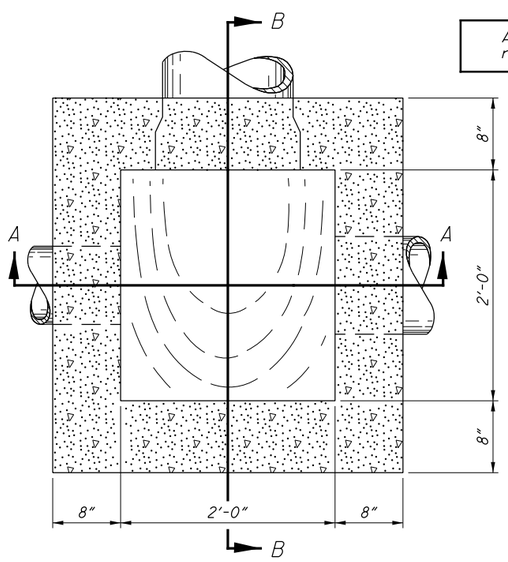

SECTION C-C

All grate edges to be rounded 1/4" radii

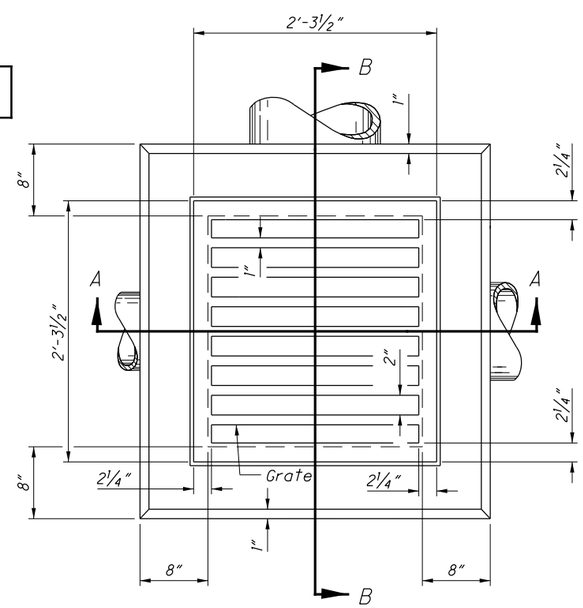

PLAN

CATCH BASIN No. 2-2B

NOTES

CATCH BASINS 2-2A & B: This sheet depicts Catch Basin 2-2B. See Sheet 1 of 2 for Catch Basin 2-2A.

GRATE: Furnish a design essentially the same and equally as strong as the one shown (see Construction Information table), or meet the requirements of CMS 711.14. Provide grate openings and dimensions as shown here unless otherwise shown in the plans.

If necessary, bicycle safe grates will be specified in the plans. Furnish Neenah No. R-4859-C or East Jordan No. 5110 Type M3 bicycle safe grates or approved equals.

Cast the following text into the top of the grate:

"DRAINS TO WATERWAY" and **"DUMP NO WASTE"**

Print text in bold, capital letters at least 1/2" high. "WATERWAY" may be substituted with "STREAM", "RIVER", "LAKE", etc. Actual placement and logo may vary per manufacturer.

WALLS: Construct brick or cast-in-place walls with a nominal 8" thickness. Provide precast walls at least 6" thick with sufficient reinforcing to permit shipping and handling without damage.

CONCRETE: Use 4000 psi compressive strength for cast-in-place concrete. Meet the requirements of CMS 706.13 for all precast concrete and mark with the catch basin number.

PRECAST BASE: If a precast base is used, set it deep enough so that the top can be placed on the base to provide the grate elevation specified in the plans. Do not use brick layers to adjust the top elevation.

LOCATION AND ELEVATION: When given on the plans, location and elevation are at the top center of the grate. When side openings are provided, the elevation is at the flow line of the side inlet.

MINIMUM DEPTH: The minimum depth of CB No. 2-2B is the outside diameter (O.D.) of the outlet pipe plus 4".

2-2B GRATE ELEVATION: Place grate elevation 4" to 6" below normal ditch and return to normal 10' to 15' each side of inlet.

OPENINGS: Obtain the Engineer's approval for any pipe openings greater than 4" from the outside of the pipe to the structure. Fill all voids per CMS 611

PAYMENT: All materials and labor, including excavation and backfilling, are paid for under **Item 611 - Catch Basin, No. 2-2B.**

CONSTRUCTION INFORMATION
Minimum weight of grate, 120 lbs.

CATCH BASIN	OUTLET PIPE SIZE
2-2A	12" to 21"
2-2B	12" to 21"

STATE OF OHIO DEPARTMENT OF TRANSPORTATION

STATE HYDRAULIC ENGINEER

REVISIONS
7-20-01
7-19-02
7-15-05
7-20-12
1-18-13

ROADWAY HYDRAULIC ENGINEER
Matt Cozzoli

OFFICE OF HYDRAULIC ENGINEERING

STANDARD HYDRAULIC CONSTRUCTION DRAWING

CATCH BASINS No's 2-2A & B

SCD NUMBER
CB-1.1