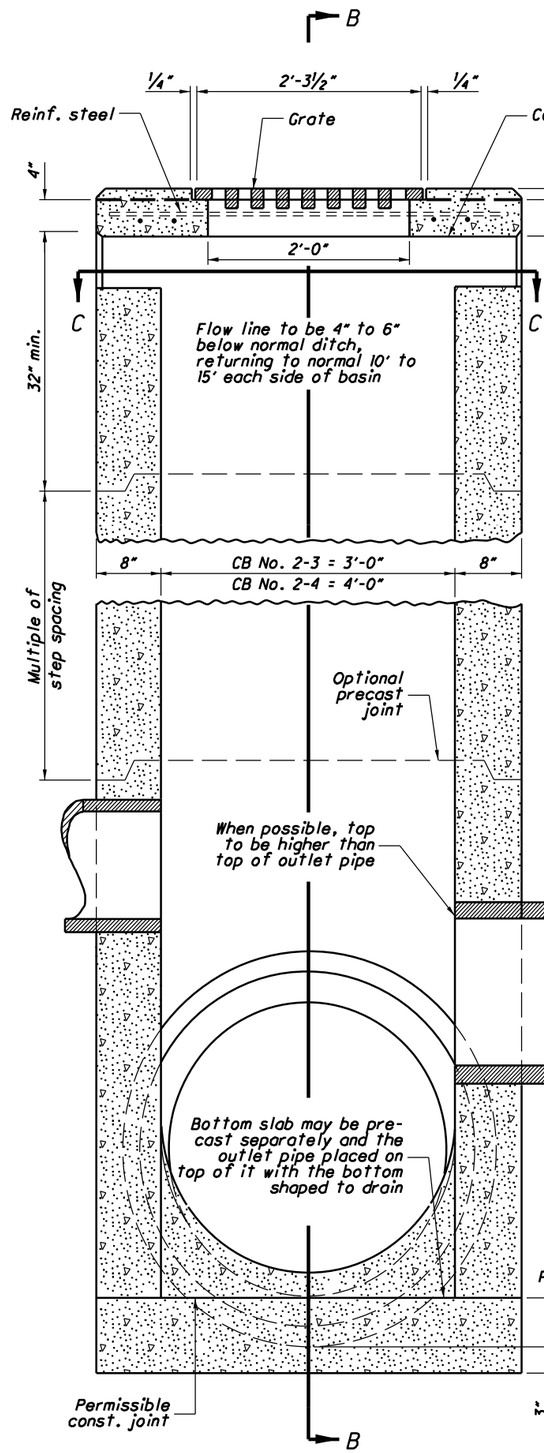

SECTION A-A

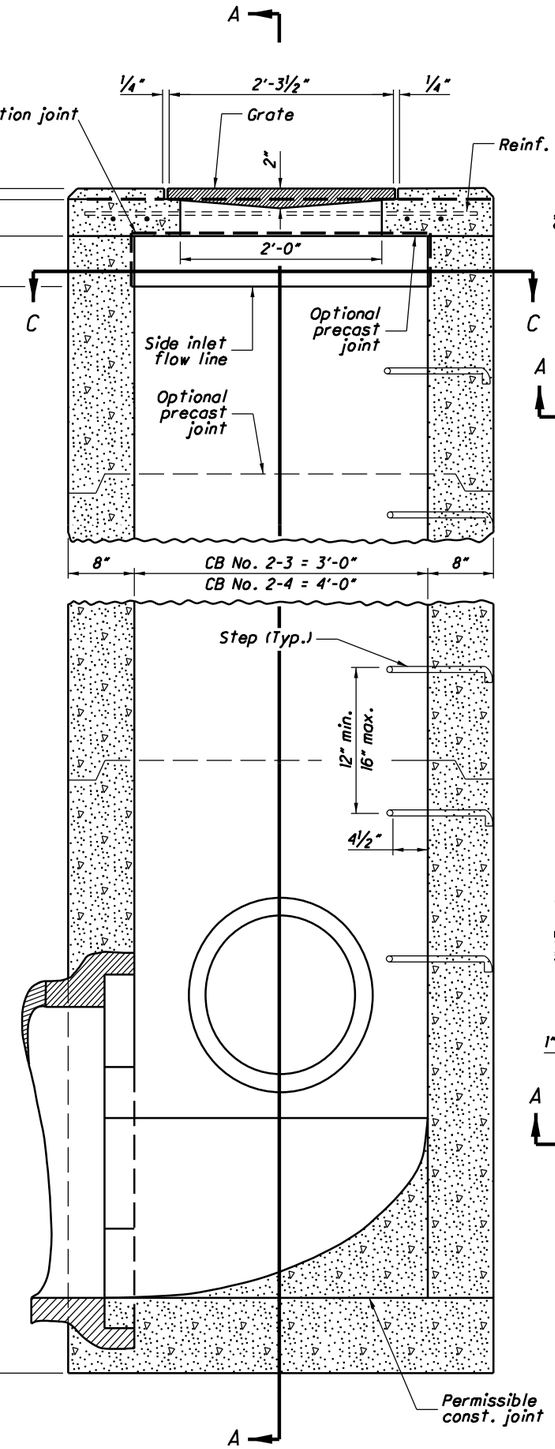

SECTION B-B

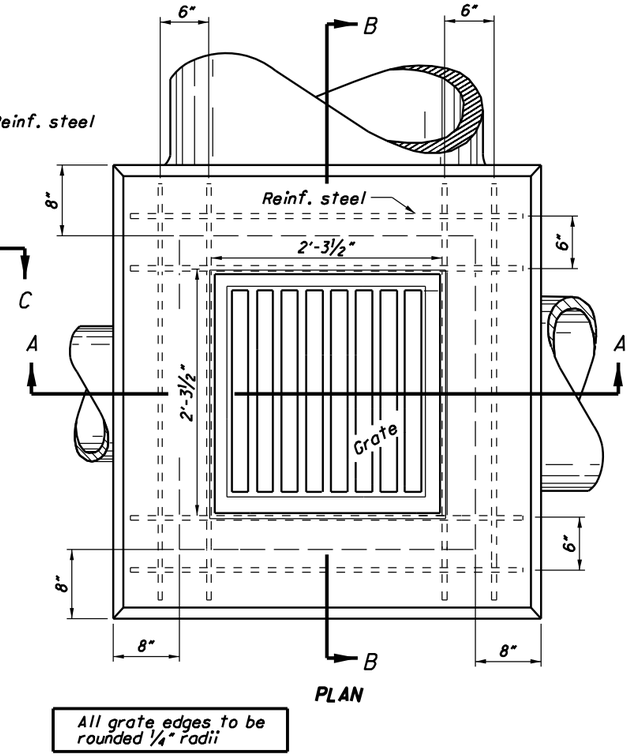

PLAN

All grate edges to be rounded 1/4" radii

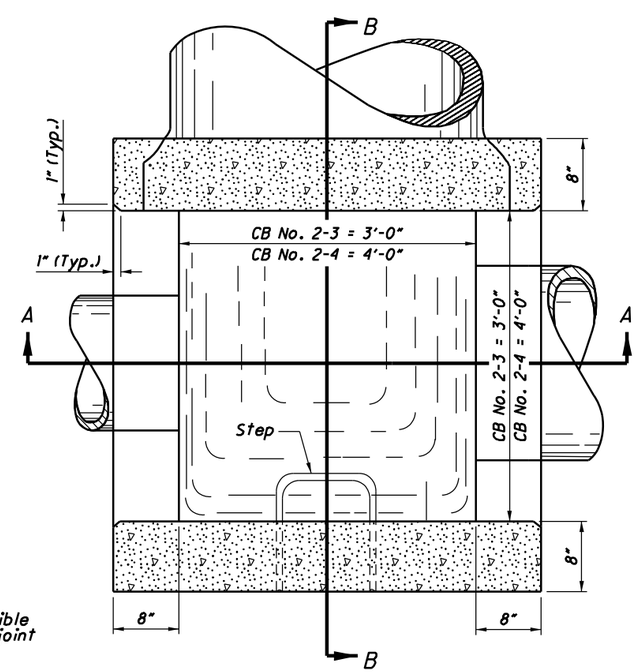

SECTION C-C

CATCH BASINS No. 2-3 & No. 2-4

NOTES

GRATE: See details on **SCD CB-1.1.**

If necessary, bicycle safe grates will be specified in the plans. Furnish Neenah No. R-4859-C or East Jordan No. 5110 Type M3 bicycle safe grates or approved equals.

Cast the following text into the top of the grate:

"DUMP NO WASTE" and **"DRAINS TO WATERWAY"**

Print text in bold, capital letters at least 1/2" high. "WATERWAY" may be substituted with "STREAM", "RIVER", "LAKE", etc. Actual placement and logo may vary per manufacturer.

WALLS: Construct brick or cast-in-place walls with a nominal 8" thickness. Provide precast walls at least 6" thick with sufficient reinforcing to permit shipping and handling without damage.

STEPS: Provide steps where the depth exceeds 6'. Meet the requirements of **SCD MH-1.1.**

CONCRETE: Use 4000 psi compressive strength for cast-in-place concrete. Meet the requirements of CMS 706.13 for all precast concrete and mark with the catch basin number.

REINFORCEMENT: Provide #4 bars spaced at 6" center to center for top reinforcing. For Catch Basin No. 2-3 use eight bars, and for Catch Basin No. 2-4 use twelve bars.

INLETS OVER 12 FEET DEEP: Use precast or cast-in-place concrete; reinforce with #4 bars on 12" centers both vertically and horizontally with 2" clearance from inside wall face.

PRECAST BASE: If a precast base is used, set it deep enough so that the top can be placed on the base to provide the grate elevation specified in the plans. Do not use brick layers to adjust the top elevation.

LOCATION AND ELEVATION: When given on the plans, the location and the elevation are at the top center of the grate. When side openings are provided, the elevation is at the flow line of the side inlet.

MINIMUM DEPTH: The minimum depth of CB No. 2-3 and CB No. 2-4 is the outside diameter (O.D.) of the outlet pipe plus 7".

OPENINGS: Obtain the Engineer's approval for any pipe openings greater than 4" from the outside of the pipe to the structure. Fill all voids per CMS 611.

SIDE INLETS: Provide inlets on both sides of the No. 2-3 and 2-4 catch basin in sags and on upstream side only where the ditch has a continuous down grade past the catch basin. Do not use catch basins with side inlets within the Clear Zone.

PAYMENT: All materials and labor, including excavation and backfill, are paid for under **Item 611 - Catch Basin, No. 2-3 or Item 611 - Catch Basin No. 2-4.**

CATCH BASIN	OUTLET PIPE SIZE
2-3	12" to 33"
2-4	36" to 42"

STATE OF OHIO DEPARTMENT OF TRANSPORTATION

STATE HYDRAULIC ENGINEER

REVISIONS
7-20-01
7-19-02
7-15-05
7-20-12
1-18-13

ROADWAY HYDRAULIC ENGINEER
Matt Cozzoli

OFFICE OF HYDRAULIC ENGINEERING

STANDARD HYDRAULIC CONSTRUCTION DRAWING

CATCH BASINS No's 2-3 & 2-4

SCD NUMBER
CB-1.2

1/1