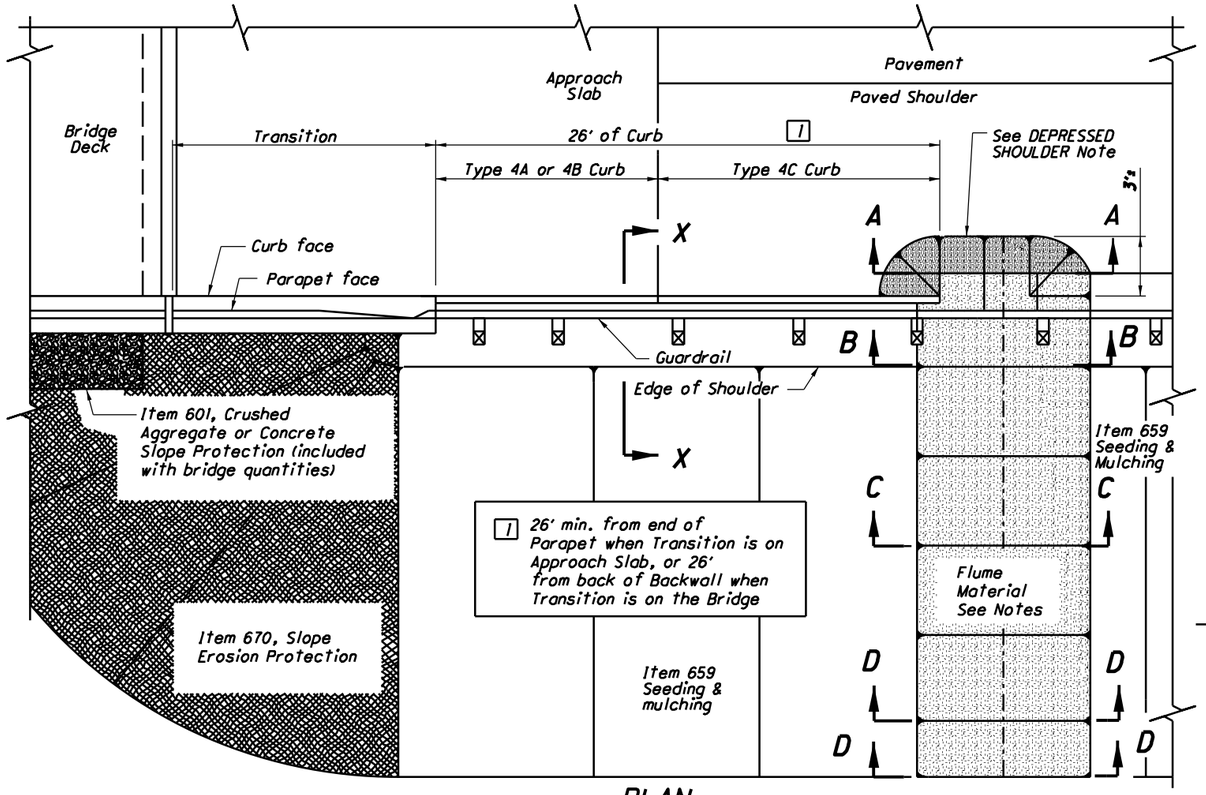


PLAN

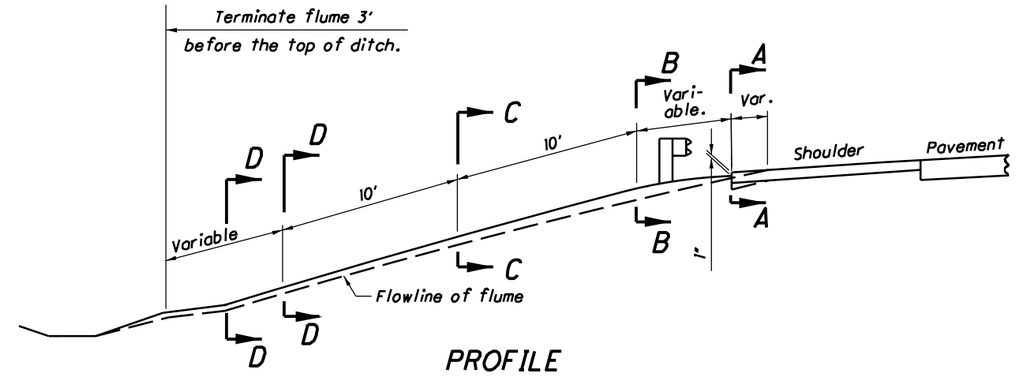


PROFILE

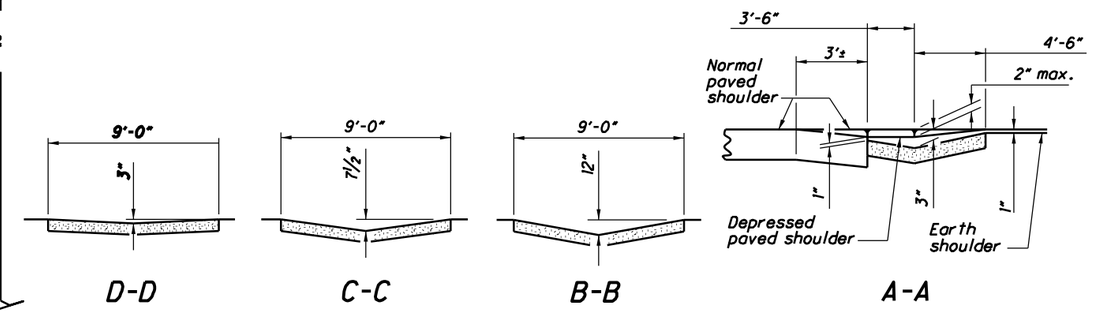


CROSS SECTIONS

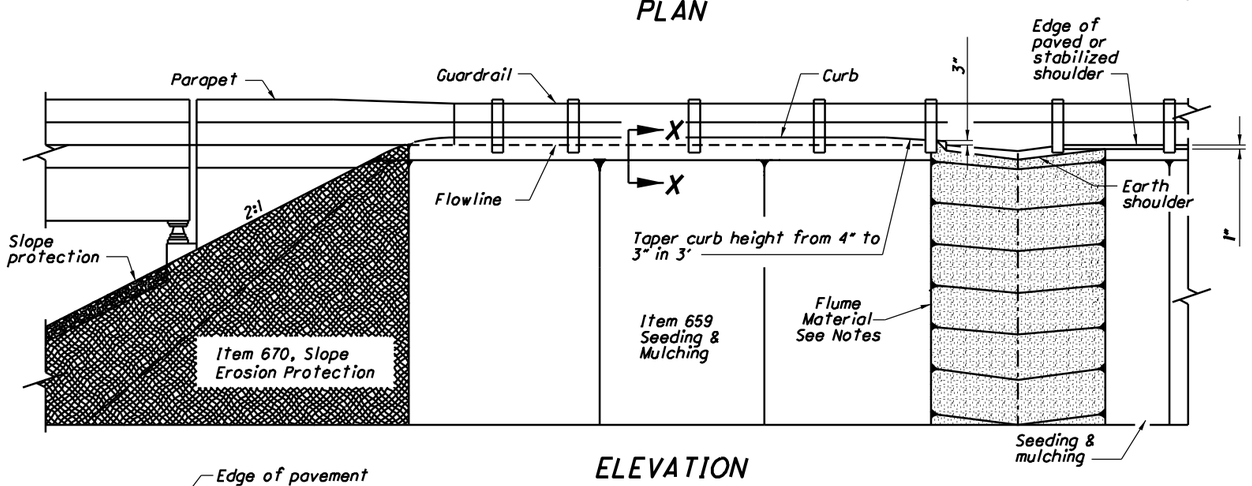


ELEVATION

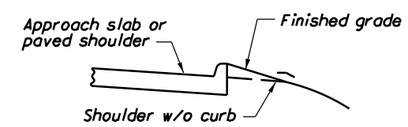


SECTION X-X

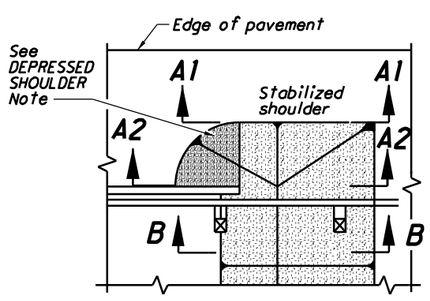


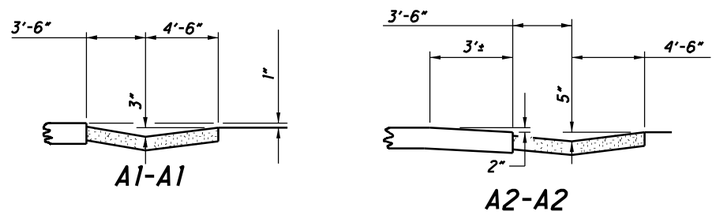


STABILIZED SHOULDER DETAIL

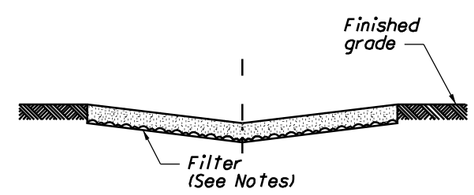


FLUME INSTALLATION DETAIL

## NOTES

**DEPRESSED SHOULDER:**
Depress this portion of the shoulder to ensure positive drainage into the flume. It is especially important in the shoulder area to excavate and shape the subgrade according to the cross sections.

**FLUME MATERIAL:**
Provide Item 601 Tied Concrete Block Mat, Type 2 on Filter Fabric as shown in the plans.

Start Tied Concrete Block Mat at the face of the guardrail. Place and compact shoulder or aggregate filter material inside the guardrail face.

**BRIDGES OVER WATERWAYS**
For bridges over waterways provide Rock Channel Protection in front of abutments, wingwalls and on corner cones as described in the Bridge Design Manual Sec. 203.3.

**PAYMENT:**
Payment for all of the above is included in the unit price bid for item 601, Tied Concrete Block Mat, Type 2, square yard.

STATE OF OHIO DEPARTMENT OF TRANSPORTATION
STAVE HYDRAULIC ENGINEER

REVISIONS
7-20-01
10-15-10
1-21-11
10-21-11
7-20-12
7-19-13

ROADWAY HYDRAULIC ENGINEER
Matt Cozzoli

OFFICE OF HHYDRAULIC ENGINEERING

STANDARD HYDRAULIC CONSTRUCTION DRAWING
EROSION CONTROL AT BRIDGES

SCD NUMBER
DM-4.1

1/1