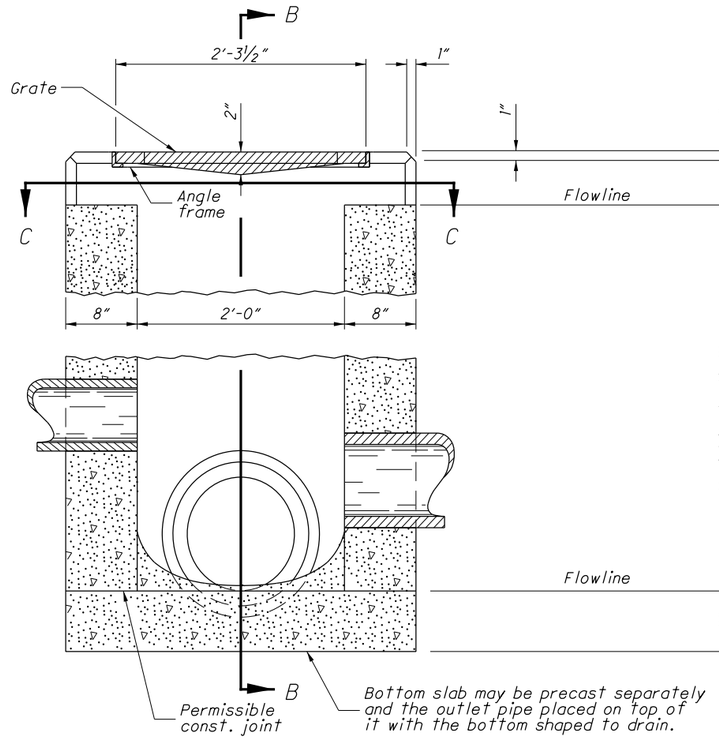

SECTION A-A

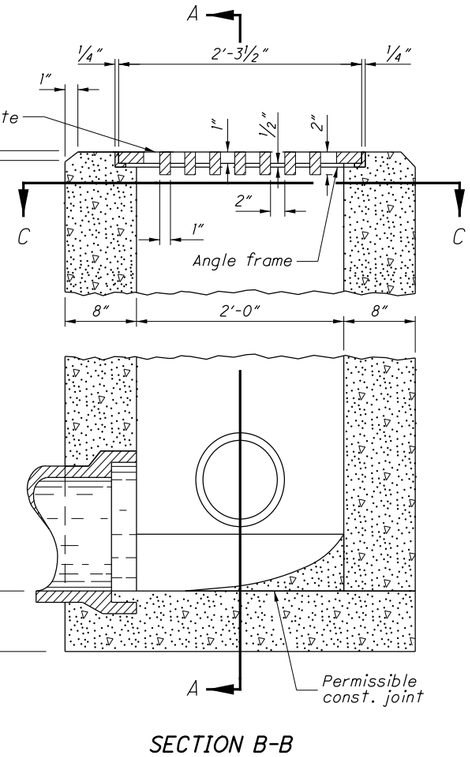

SECTION B-B

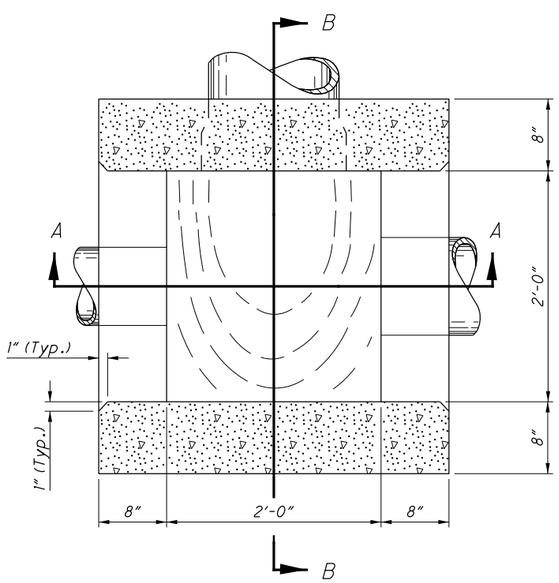

SECTION C-C

All grate edges to be rounded ¼" radii.

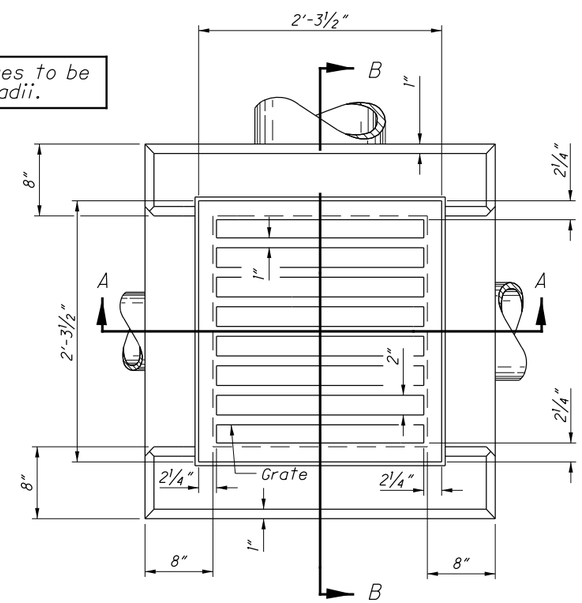

PLAN

CATCH BASIN No. 2-2A

NOTES

GENERAL: Catch Basins 2-2A and 2-2B are not intended for traffic bearing applications.

CATCH BASINS 2-2A &B: This sheet depicts Catch Basin 2-2A. See Sheet 2 of 2 for Catch Basin 2-2B.

GRATE AND FRAME: Furnish a design essentially the same and equally as strong as the one shown (see Construction Information table), or meet the requirements of CMS 711.14. Provide grate openings and dimensions as shown here unless otherwise shown in the plans.

Cast the following text into the top of the grate:

"DUMP NO WASTE" and **"DRAINS TO WATERWAY"**

Print text in bold, capital letters at least ½" high. "WATERWAY" may be substituted with "STREAM", "RIVER", "LAKE", etc. Actual placement and logo may vary per manufacturer.

WALLS: Construct brick or cast-in-place walls with a nominal 8" thickness. Provide precast walls at least 6" thick with sufficient reinforcing to permit shipping and handling without damage. Do not use brick above the flow line of the side opening for Type 2-2A.

CONCRETE: Use 4000 psi compressive strength for cast-in-place concrete. Meet the requirements of CMS 706.13 for all precast concrete and mark with the catch basin number.

PRECAST BASE: If a precast base is used, set it deep enough so that the top can be placed on the base to provide the grate elevation specified in the plans. Do not use brick layers to adjust the top elevation.

LOCATION AND ELEVATION: When given on the plans, location is the top center of the grate and the elevation is the flow line of the side inlet.

MINIMUM DEPTH: The minimum depth of CB No. 2-2A is the outside diameter (O.D.) of the outlet pipe plus 7".

OPENINGS: Obtain the Engineer's approval for any pipe openings greater than 4" from the outside of the pipe to the structure. Fill any voids per CMS 611

2-2A SIDE INLETS: Provide inlets on both sides of the No. 2-2A catch basin in sags and on upstream side only where the ditch has a continuous down grade past the catch basin. Do not use CB 2-2A within the Clear Zone. The flow line should be 4" to 6" below normal ditch returning to normal 10' to 15' each side of the inlet.

PAYMENT: All materials and labor, including excavation and backfilling, are paid for under **Item 611 - Catch Basin, No. 2-2A.**

CONSTRUCTION INFORMATION
Minimum weight of grate, 120 lbs. Minimum weight of frame, 40 lbs.

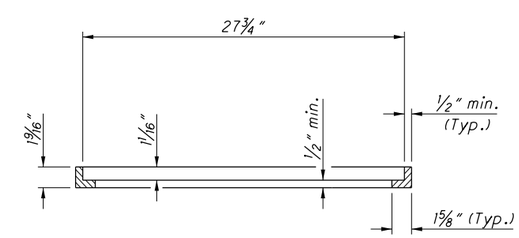

SECTION THRU ANGLE FRAME FOR STANDARD No. 2-2A CATCH BASIN

STATE OF OHIO DEPARTMENT OF TRANSPORTATION

STATE HYDRAULIC ENGINEER

REVISIONS
7-20-01
7-19-02
7-15-05
7-20-12
1-18-13

ROADWAY HYDRAULIC ENGINEER
Matt Cozzoli

OFFICE OF HYDRAULIC ENGINEERING

STANDARD HYDRAULIC CONSTRUCTION DRAWING

CATCH BASINS No's 2-2A & B

SCD NUMBER
CB-1.1

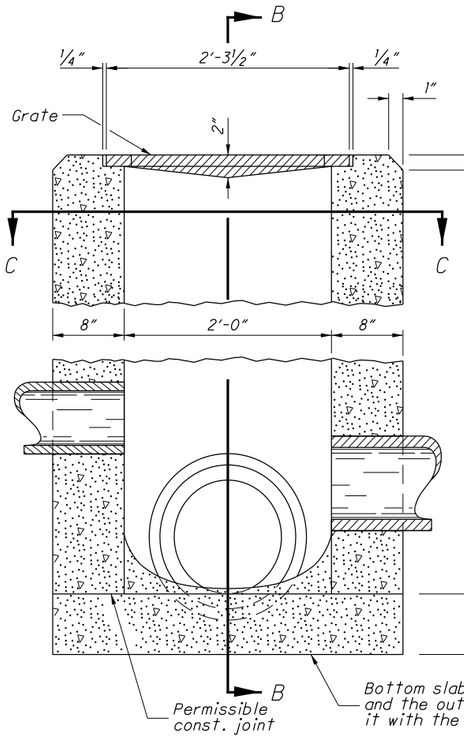

SECTION A-A

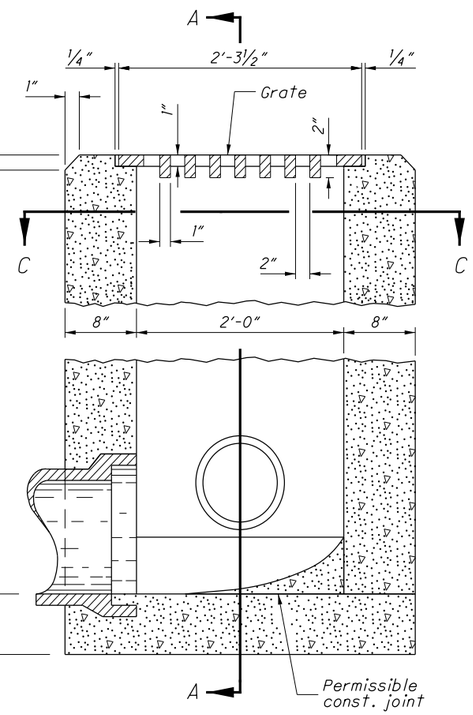

SECTION B-B

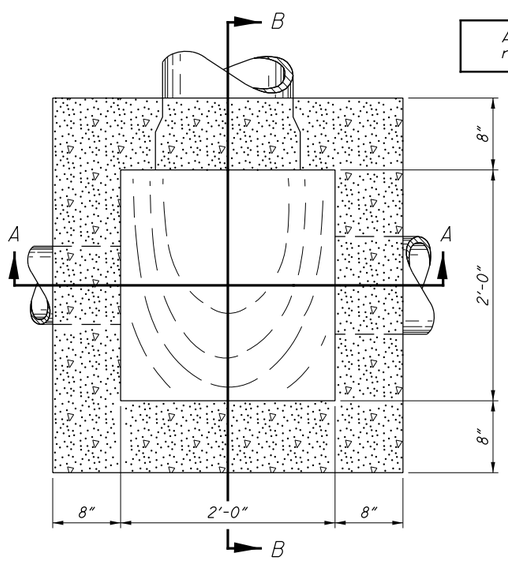

SECTION C-C

All grate edges to be rounded 1/4" radii

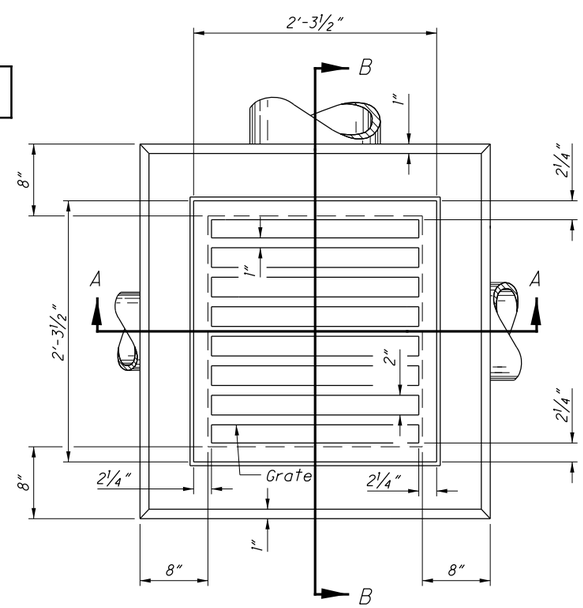

PLAN

CATCH BASIN No. 2-2B

NOTES

CATCH BASINS 2-2A & B: This sheet depicts Catch Basin 2-2B. See Sheet 1 of 2 for Catch Basin 2-2A.

GRATE: Furnish a design essentially the same and equally as strong as the one shown (see Construction Information table), or meet the requirements of CMS 711.14. Provide grate openings and dimensions as shown here unless otherwise shown in the plans.

If necessary, bicycle safe grates will be specified in the plans. Furnish Neenah No. R-4859-C or East Jordan No. 5110 Type M3 bicycle safe grates or approved equals.

Cast the following text into the top of the grate:

"DRAINS TO WATERWAY" and **"DUMP NO WASTE"**

Print text in bold, capital letters at least 1/2" high. "WATERWAY" may be substituted with "STREAM", "RIVER", "LAKE", etc. Actual placement and logo may vary per manufacturer.

WALLS: Construct brick or cast-in-place walls with a nominal 8" thickness. Provide precast walls at least 6" thick with sufficient reinforcing to permit shipping and handling without damage.

CONCRETE: Use 4000 psi compressive strength for cast-in-place concrete. Meet the requirements of CMS 706.13 for all precast concrete and mark with the catch basin number.

PRECAST BASE: If a precast base is used, set it deep enough so that the top can be placed on the base to provide the grate elevation specified in the plans. Do not use brick layers to adjust the top elevation.

LOCATION AND ELEVATION: When given on the plans, location and elevation are at the top center of the grate. When side openings are provided, the elevation is at the flow line of the side inlet.

MINIMUM DEPTH: The minimum depth of CB No. 2-2B is the outside diameter (O.D.) of the outlet pipe plus 4".

2-2B GRATE ELEVATION: Place grate elevation 4" to 6" below normal ditch and return to normal 10' to 15' each side of inlet.

OPENINGS: Obtain the Engineer's approval for any pipe openings greater than 4" from the outside of the pipe to the structure. Fill all voids per CMS 611

PAYMENT: All materials and labor, including excavation and backfilling, are paid for under **Item 611 - Catch Basin, No. 2-2B.**

CONSTRUCTION INFORMATION
Minimum weight of grate, 120 lbs.

CATCH BASIN	OUTLET PIPE SIZE
2-2A	12" to 21"
2-2B	12" to 21"

STATE OF OHIO DEPARTMENT OF TRANSPORTATION

STATE HYDRAULIC ENGINEER

REVISIONS
7-20-01
7-19-02
7-15-05
7-20-12
1-18-13

ROADWAY HYDRAULIC ENGINEER
Matt Cozzoli

OFFICE OF HYDRAULIC ENGINEERING

STANDARD HYDRAULIC CONSTRUCTION DRAWING

CATCH BASINS No's 2-2A & B

SCD NUMBER
CB-1.1

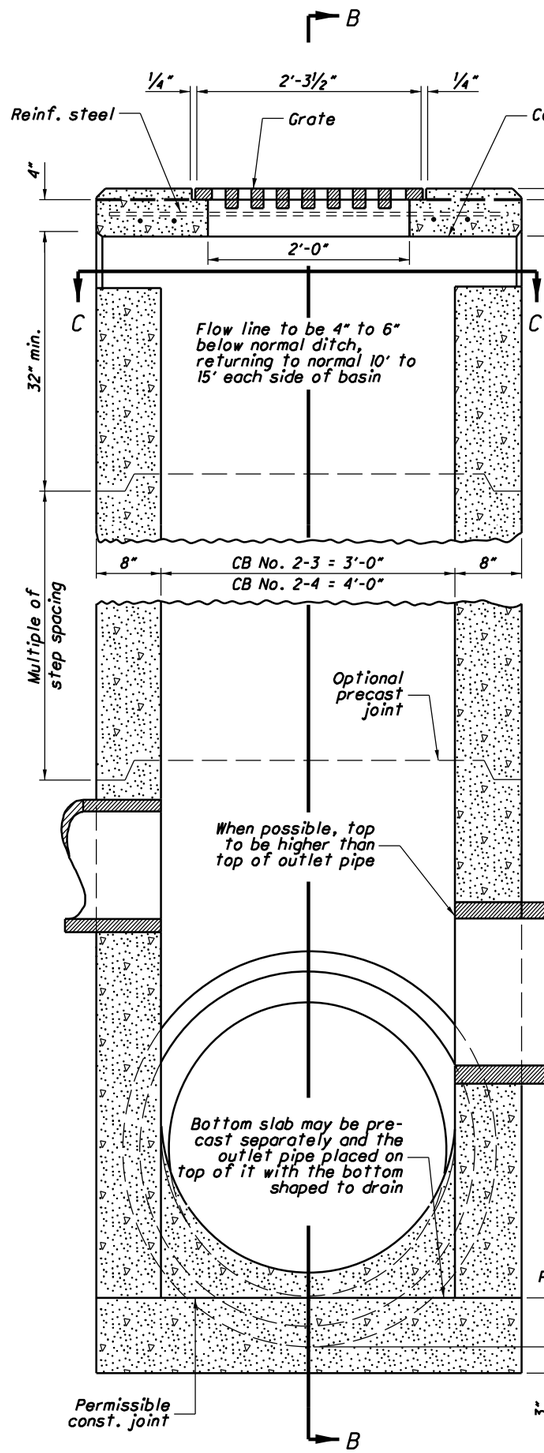

SECTION A-A

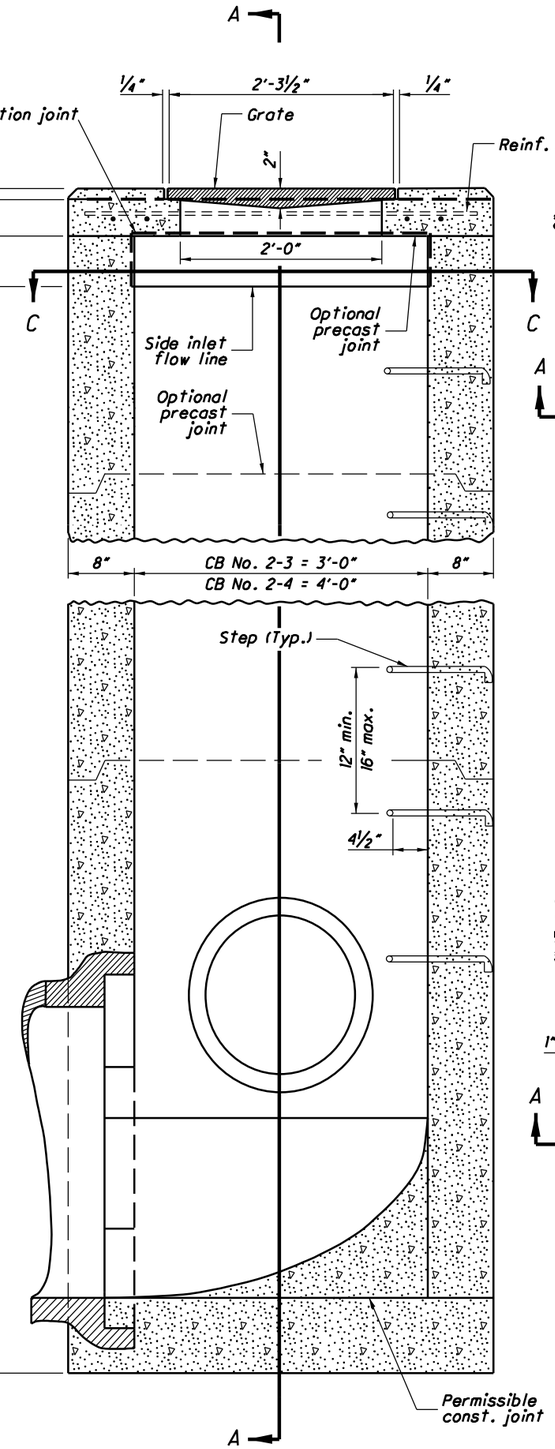

SECTION B-B

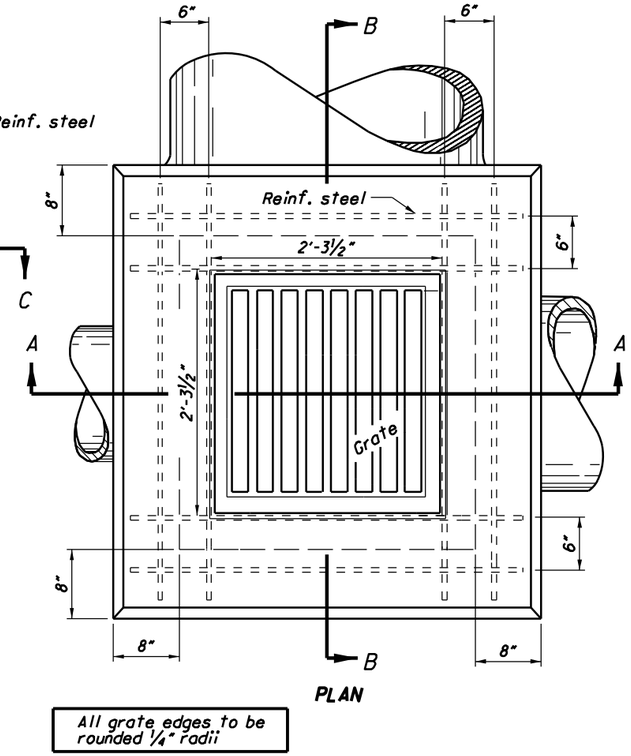

PLAN

All grate edges to be rounded 1/4" radii

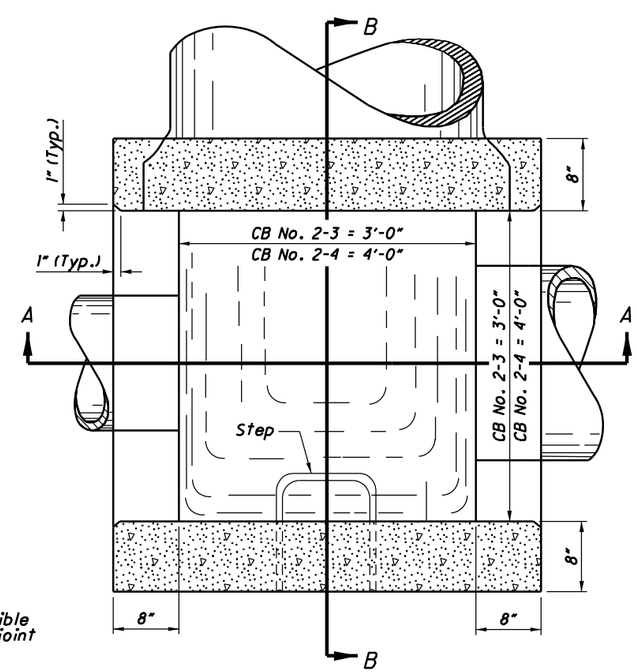

SECTION C-C

CATCH BASINS No. 2-3 & No. 2-4

NOTES

GRATE: See details on **SCD CB-1.1.**

If necessary, bicycle safe grates will be specified in the plans. Furnish Neenah No. R-4859-C or East Jordan No. 5110 Type M3 bicycle safe grates or approved equals.

Cast the following text into the top of the grate:

"DUMP NO WASTE" and **"DRAINS TO WATERWAY"**

Print text in bold, capital letters at least 1/2" high. "WATERWAY" may be substituted with "STREAM", "RIVER", "LAKE", etc. Actual placement and logo may vary per manufacturer.

WALLS: Construct brick or cast-in-place walls with a nominal 8" thickness. Provide precast walls at least 6" thick with sufficient reinforcing to permit shipping and handling without damage.

STEPS: Provide steps where the depth exceeds 6'. Meet the requirements of **SCD MH-1.1.**

CONCRETE: Use 4000 psi compressive strength for cast-in-place concrete. Meet the requirements of CMS 706.13 for all precast concrete and mark with the catch basin number.

REINFORCEMENT: Provide #4 bars spaced at 6" center to center for top reinforcing. For Catch Basin No. 2-3 use eight bars, and for Catch Basin No. 2-4 use twelve bars.

INLETS OVER 12 FEET DEEP: Use precast or cast-in-place concrete; reinforce with #4 bars on 12" centers both vertically and horizontally with 2" clearance from inside wall face.

PRECAST BASE: If a precast base is used, set it deep enough so that the top can be placed on the base to provide the grate elevation specified in the plans. Do not use brick layers to adjust the top elevation.

LOCATION AND ELEVATION: When given on the plans, the location and the elevation are at the top center of the grate. When side openings are provided, the elevation is at the flow line of the side inlet.

MINIMUM DEPTH: The minimum depth of CB No. 2-3 and CB No. 2-4 is the outside diameter (O.D.) of the outlet pipe plus 7".

OPENINGS: Obtain the Engineer's approval for any pipe openings greater than 4" from the outside of the pipe to the structure. Fill all voids per CMS 611.

SIDE INLETS: Provide inlets on both sides of the No. 2-3 and 2-4 catch basin in sags and on upstream side only where the ditch has a continuous down grade past the catch basin. Do not use catch basins with side inlets within the Clear Zone.

PAYMENT: All materials and labor, including excavation and backfill, are paid for under **Item 611 - Catch Basin, No. 2-3 or Item 611 - Catch Basin No. 2-4.**

CATCH BASIN	OUTLET PIPE SIZE
2-3	12" to 33"
2-4	36" to 42"

STATE OF OHIO DEPARTMENT OF TRANSPORTATION

STATE HYDRAULIC ENGINEER

REVISIONS
7-20-01
7-19-02
7-15-05
7-20-12
1-18-13

ROADWAY HYDRAULIC ENGINEER
Matt Cozzoli

OFFICE OF HYDRAULIC ENGINEERING

STANDARD HYDRAULIC CONSTRUCTION DRAWING

CATCH BASINS No's 2-3 & 2-4

SCD NUMBER
CB-1.2

1/1

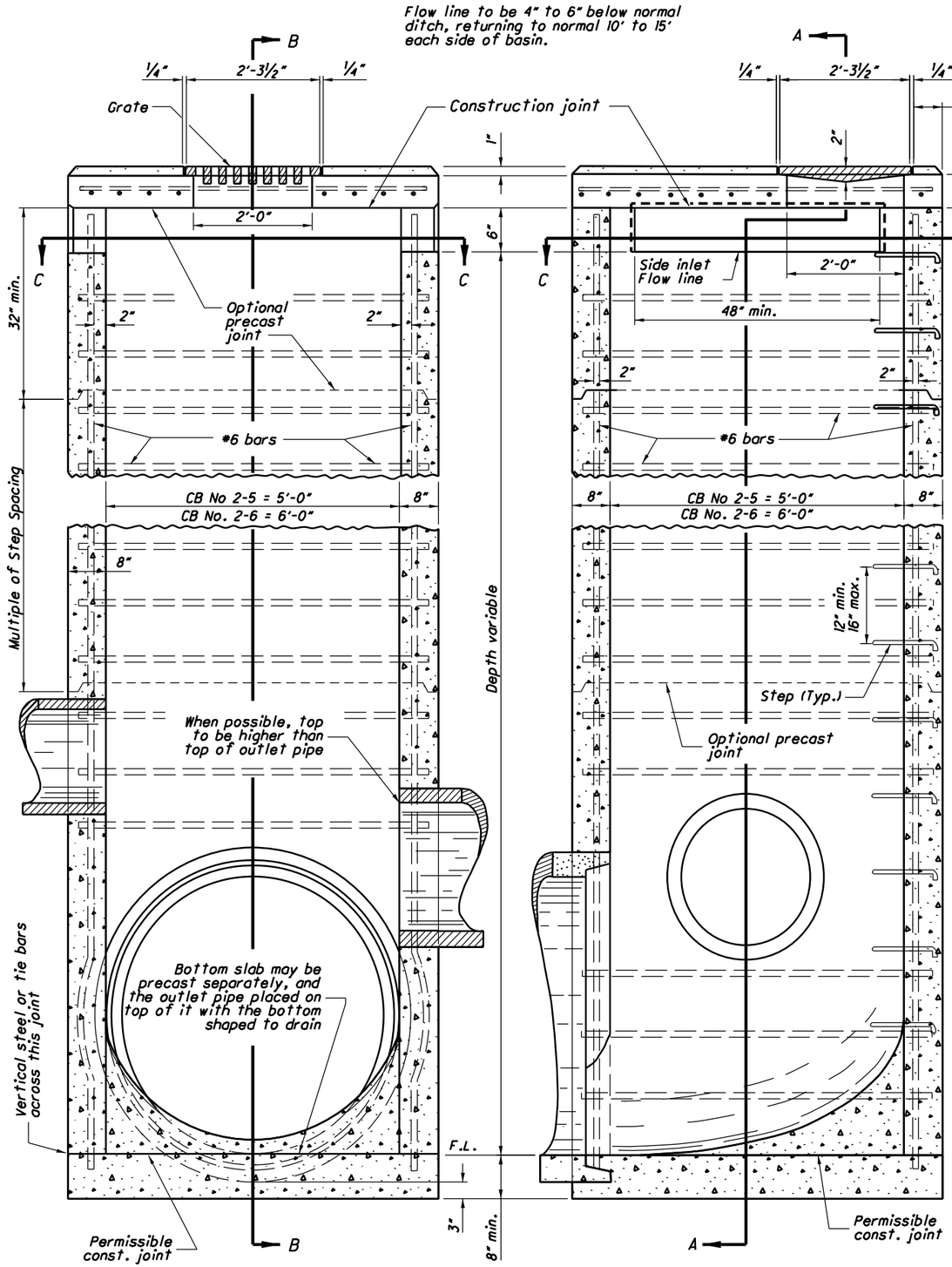

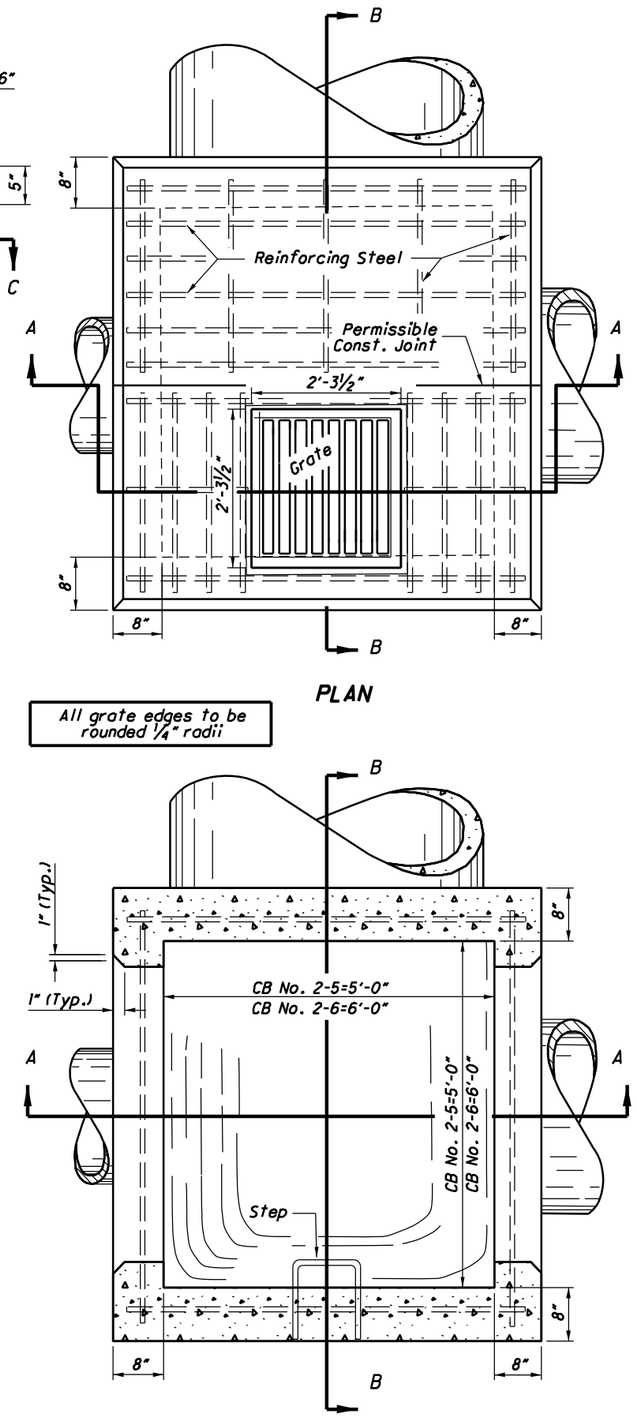

CATCH BASINS No. 2-5 & No. 2-6

NOTES

GRATE: See details on **SCD CB-1.1.** Minimum weight of grate: 120 lbs., or meets the requirements of CMS 711.14. Provide grate openings and dimensions as shown here unless otherwise shown in the plans.

If necessary, bicycle safe grates will be specified in the plans. Furnish Neenah No. R-4859-C or East Jordan No. 5110 Type M3 bicycle safe grates or approved equals.

Cast the following text into the top of the grate:

"DUMP NO WASTE" and **"DRAINS TO WATERWAY"**

Print text in bold, capital letters at least 1/2" high. "WATERWAY" may be substituted with "STREAM", "RIVER", "LAKE", etc. Actual placement and logo may vary per manufacturer.

WALLS: Construct reinforced concrete walls 8" thick, as shown. Construct brick walls used in place of reinforced concrete with a nominal thickness of 12". Provide precast walls at least 6" thick with sufficient reinforcing to permit shipping and handling without damage and at least equivalent to reinforced cast-in-place construction.

STEPS: Provide steps where the depth exceeds 6'. Meet the requirements of **SCD MH-1.1.**

CONCRETE: Use 4000 psi compressive strength for Cast-in-place concrete. Meet the requirements of CMS 706.13 for all precast concrete and mark with the catch basin number.

REINFORCEMENT: Provide #6 bars spaced 6" center to center and #6 tie bars spaced as shown for top reinforcing. Main bars to clear bottom of slab by 1 1/4". Side wall to be reinforced with #6 bars horizontal in each side, 6' long for CB No. 2-5 and 7' long for CB 2-6, spaced at 1' center to center, and #6 bars in each corner length equals depth plus 1'.

PRECAST BASE: If a precast base is used, set it deep enough so that the top can be placed on the base to provide the grate elevation specified in the plans. Do not use brick layers to adjust the top elevation.

LOCATION AND ELEVATION: When given on the plans, the location and the elevation are at the top center of the grate. When side openings are provided, the elevation is at the flow line of the side inlet.

MINIMUM DEPTH: The minimum depth of CB No. 2-5 and CB No. 2-6 is the outside diameter (O.D.) of the outlet pipe plus 7".

OPENINGS: Obtain the Engineer's approval for any pipe openings greater than 4" from the outside of the pipe to the structure. Fill all voids per CMS 611.

SIDE INLETS: Provide inlets on both sides of the No. 2-5 and 2-6 catch basin in sags and on upstream side only where the ditch has a continuous down grade past the catch basin. Do not use catch basins with side inlets within the Clear Zone.

PAYMENT: All materials and labor, including excavation and backfilling, are paid for under **Item 611 - Catch Basin, No. 2-5 or Item 611 - Catch Basin, No. 2-6.**

CATCH BASIN	OUTLET PIPE SIZE
2-5	48" to 54"
2-6	60" to 72"

STATE OF OHIO DEPARTMENT OF TRANSPORTATION

STATE HYDRAULIC ENGINEER

REVISIONS
7-20-01
7-19-02
7-15-05
7-20-12
1-18-13

ROADWAY HYDRAULIC ENGINEER
Matt Cozzoli

OFFICE OF HYDRAULIC ENGINEERING

STANDARD HYDRAULIC CONSTRUCTION DRAWING

CATCH BASINS No's 2-5 & 2-6

SCD NUMBER
CB-1.3

1/1

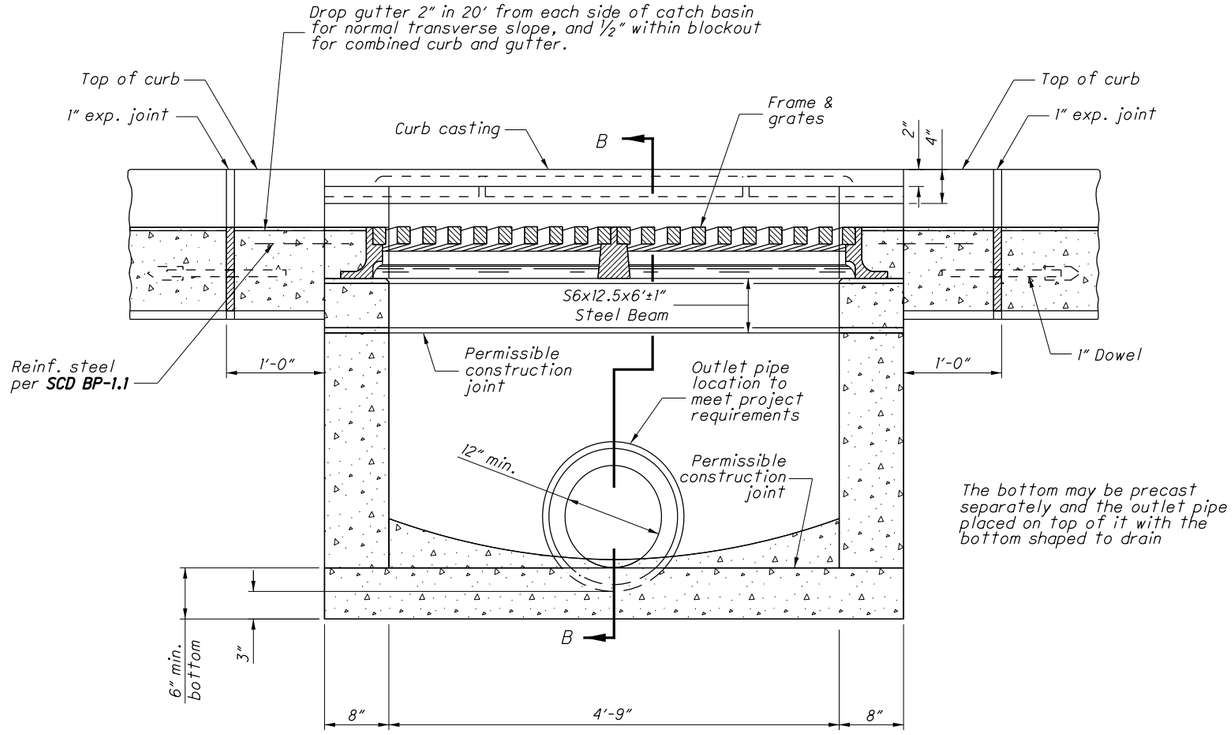

SECTION A-A

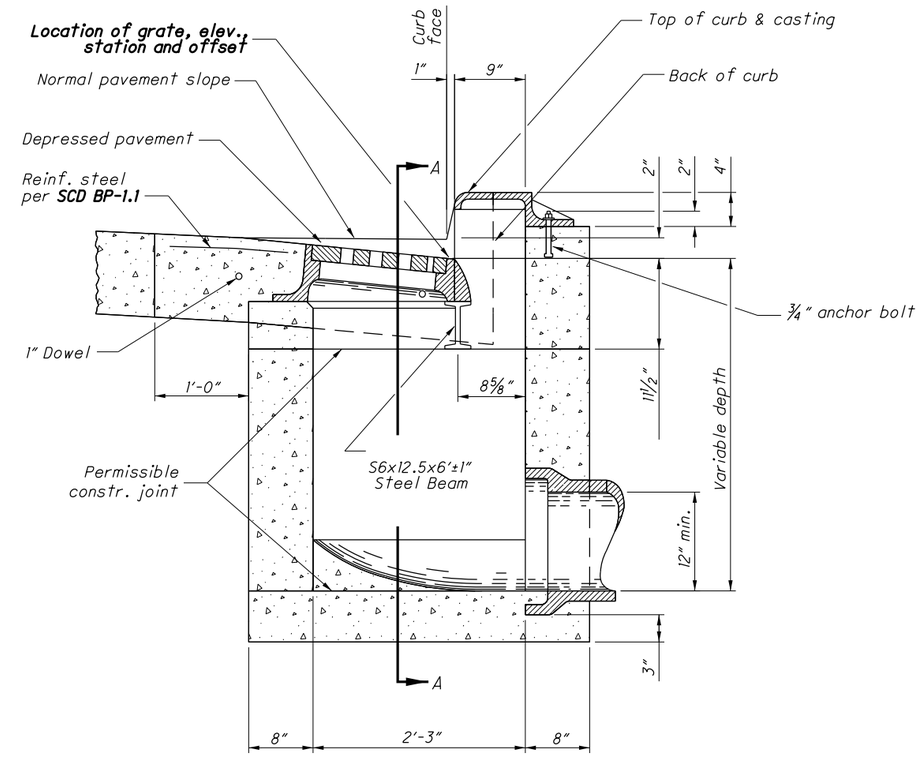

SECTION B-B
WITH CURB
(2" DEPRESSION)

1 Dowel location for curb & gutter

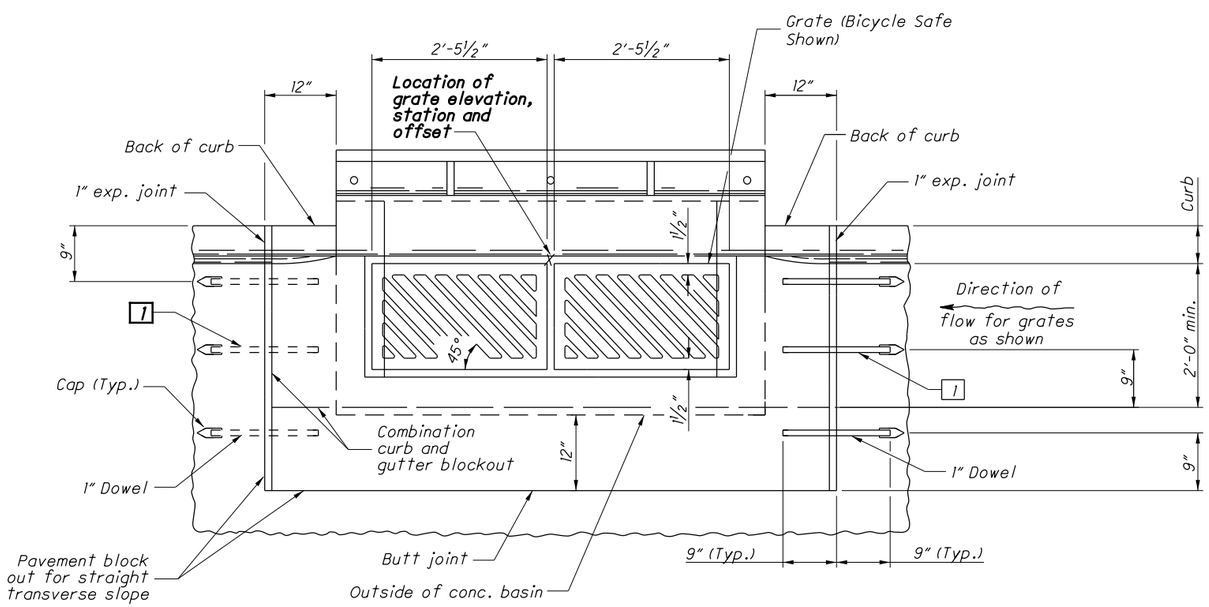

PLAN OF CATCH BASIN AND PAVEMENT JOINTS

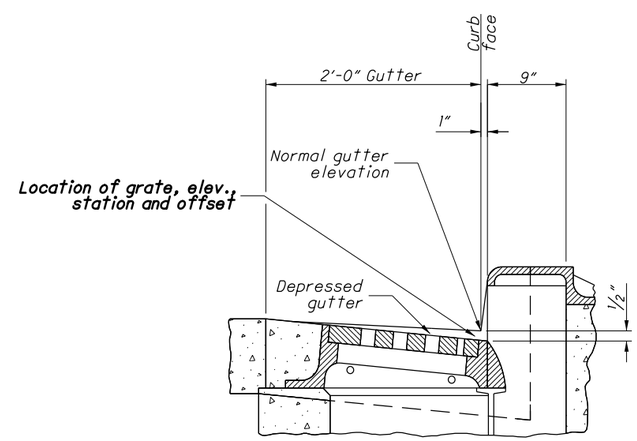

SECTION B-B
WITH CURB & GUTTER
(½" DEPRESSION)

CATCH BASIN No. 3

See Sht. 2/2 for NOTES

STATE OF OHIO DEPARTMENT OF TRANSPORTATION

STATE HYDRAULIC ENGINEER

REVISIONS
7-20-01
7-19-02
7-15-05
7-20-12
1-18-13

ROADWAY HYDRAULIC ENGINEER
Matt Cozzoli

OFFICE OF HYDRAULIC ENGINEERING

STANDARD HYDRAULIC CONSTRUCTION DRAWING

CATCH BASIN NO. 3

SCD NUMBER
CB-2.1

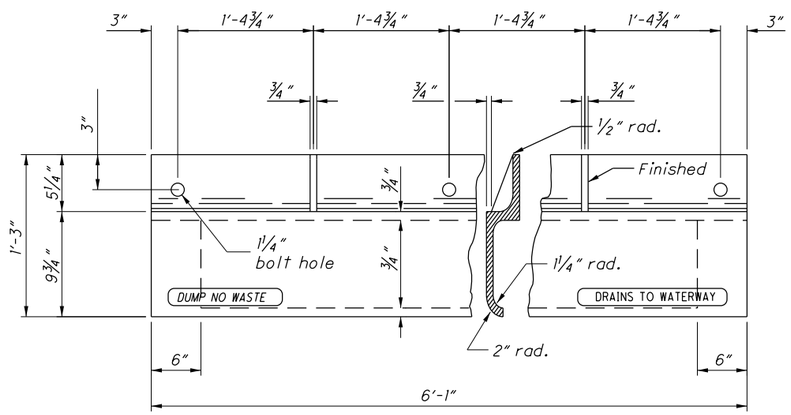

PLAN & SECTION

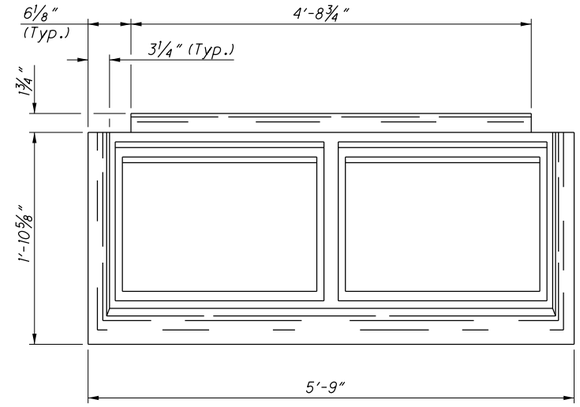

PLAN

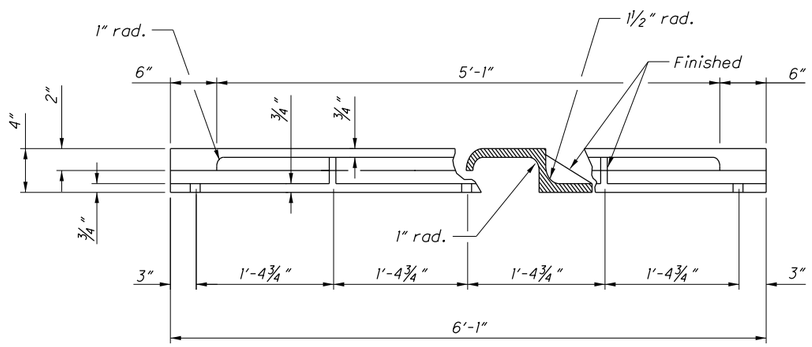

FRONT VIEW & SECTION

CURB CASTING

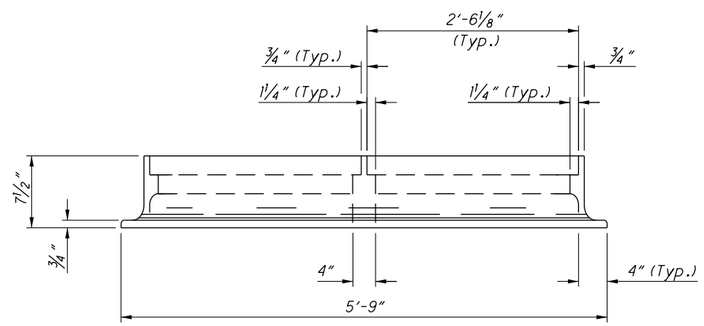

FRONT VIEW

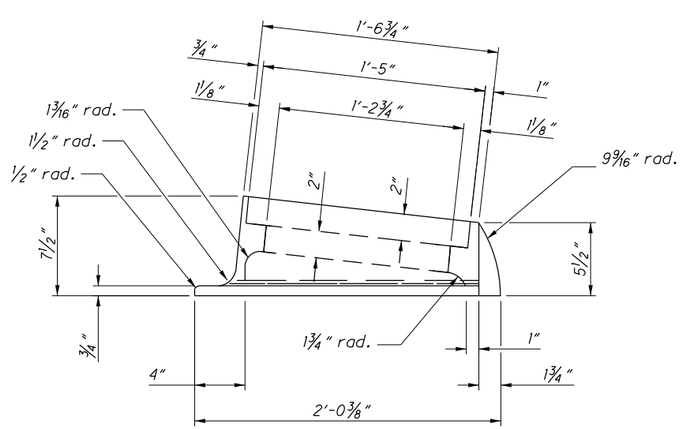

END VIEW FRAME

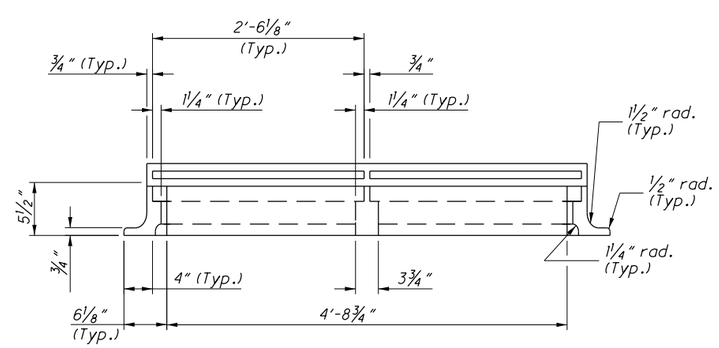

BACK VIEW

FRAME

NOTES

GRATES: Two required. For details, see **SCD CB-2.2.** Provide Grate "V" unless the plans specifically require the diagonal grate. If the diagonal grate is specified, place it so that the diagonal bars direct drainage flow toward the curb.

CASTINGS: Provide a design essentially the same and equally as strong as the one shown. Minimum weight:

Curb Casting . . . . . 305 lbs.
Two Grates . . . . . 254 lbs.
Frame . . . . . 590 lbs.
Two Grate "V" . . . . 210 lbs.

Lighter weight frames and grates that meet the requirements of CMS 711.14 may also be provided. Provide grate openings and dimensions as shown here unless otherwise shown in the plans.

Cast the following text into the top of the curb casting:

"DUMP NO WASTE" and **"DRAINS TO WATERWAY"**

Print text in bold, capital letters at least ¾" high. See example on Plan & Section. "WATERWAY" may be substituted with "STREAM", "RIVER", "LAKE", etc. Actual placement and logo may vary per manufacturer.

BEARING AREAS: Fit and finish the frame and grate to provide a firm and even seat. No projections are permitted on bearing areas, and the grate must seat in its frame without rocking.

WALLS: When used in place of concrete, construct brick side walls with 8" nominal thickness.

PRECAST CONSTRUCTION: Permitted, except for the apron. Meet CMS 706.13 concrete requirements. Provide precast walls at least 6" thick with sufficient reinforcing to permit shipping and placement without damage. Reduce the wall thickness from the outside.

MINIMUM DEPTH: The minimum depth is per the cover requirements for that pipe type.

OPENINGS: Obtain the Engineer's approval for any pipe openings greater than 4" from the outside of the pipe to the structure. Fill all voids per CMS 611.

DOWELS: Furnish four 1"x18" dowels for concrete pavement or gutter blockout. See **SCD BP-2.2** for dowel details.

BLOCKOUT: Pave blockouts with 4000 psi compressive strength concrete in PCC pavement or gutter. Blockouts are paid for as part of the pavement or gutter with no deduction in pavement, curb or gutter quantities because of the castings. Cast a 4000 psi compressive strength concrete apron, the size of the 2'-0" gutter blockout, in place in asphalt pavement (no dowels required) with the cost included in the catch basin bid price. No deduction is made in curb quantities.

PAYMENT: All materials and labor, including excavation and backfilling, are paid for under **Item 611 - Catch Basin, No. 3.**

STATE OF OHIO DEPARTMENT OF TRANSPORTATION

STATE HYDRAULIC ENGINEER

REVISIONS
7-20-01
7-19-02
7-15-05
7-20-12
1-18-13

ROADWAY HYDRAULIC ENGINEER
Matt Cozzoli

OFFICE OF HYDRAULIC ENGINEERING

STANDARD HYDRAULIC CONSTRUCTION DRAWING

CATCH BASIN NO. 3

SCD NUMBER
CB-2.1

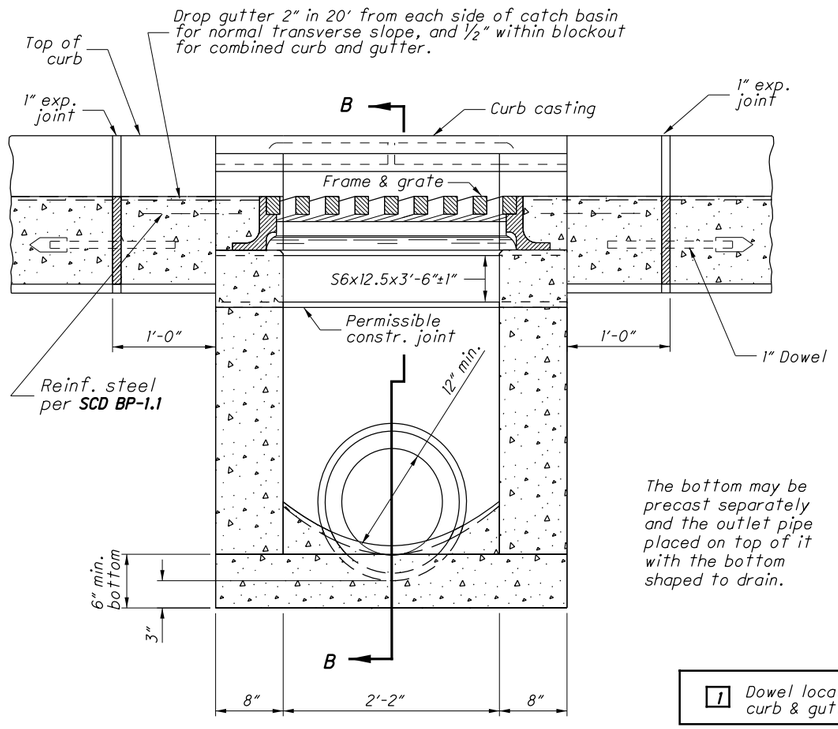

SECTION A-A

The bottom may be precast separately and the outlet pipe placed on top of it with the bottom shaped to drain.

1 Dowel location for curb & gutter

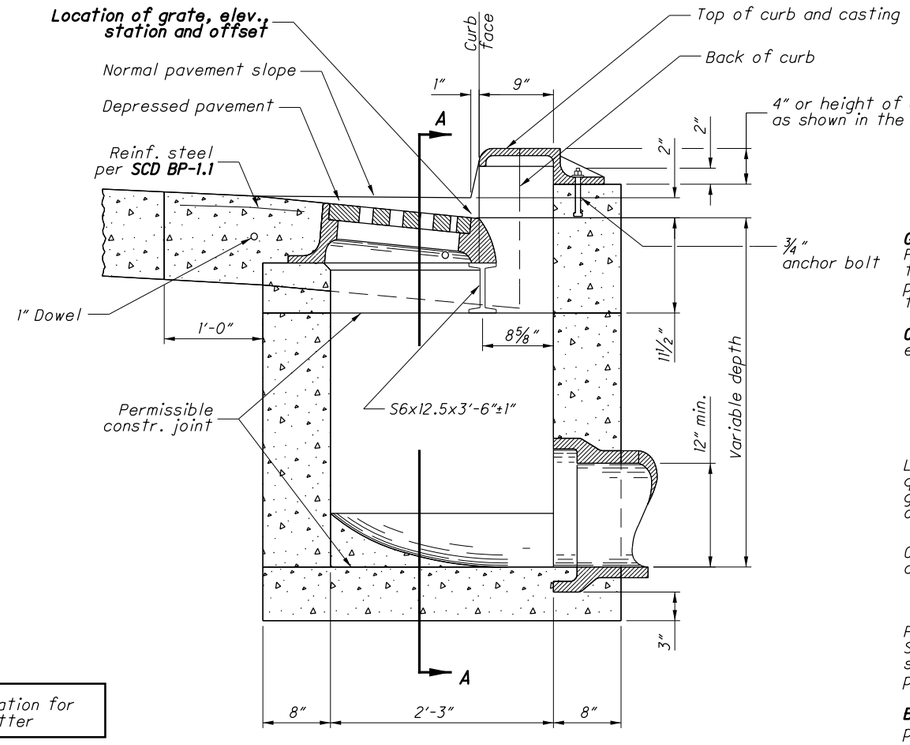

SECTION B-B
WITH CURB
(2" DEPRESSION)

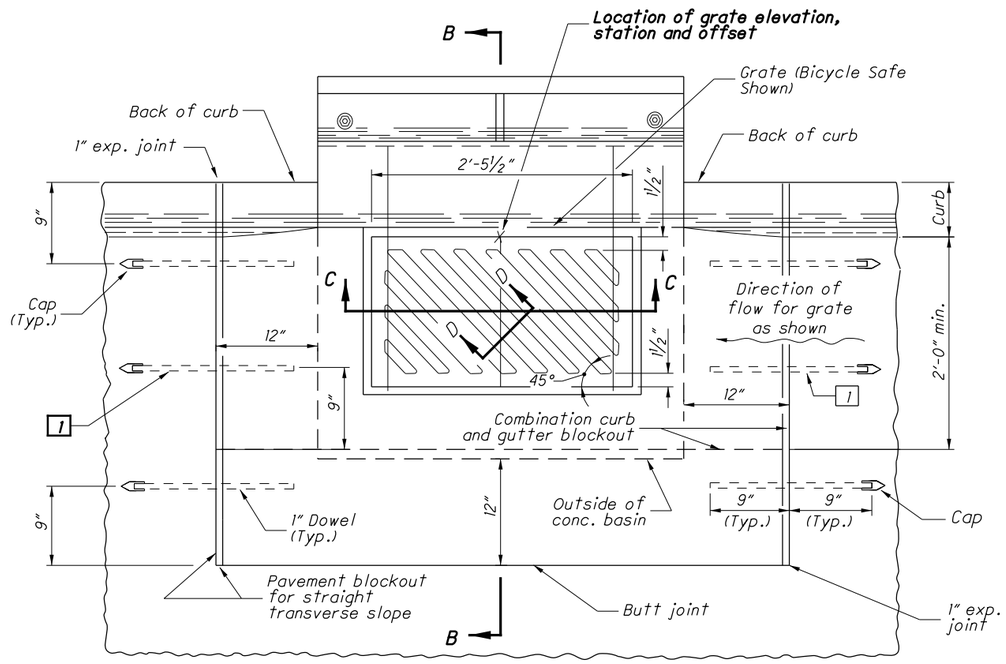

PLAN OF CATCH BASIN AND PAVEMENT JOINTS

(For SECTIONS C-C and D-D, see Sht. 2/2)

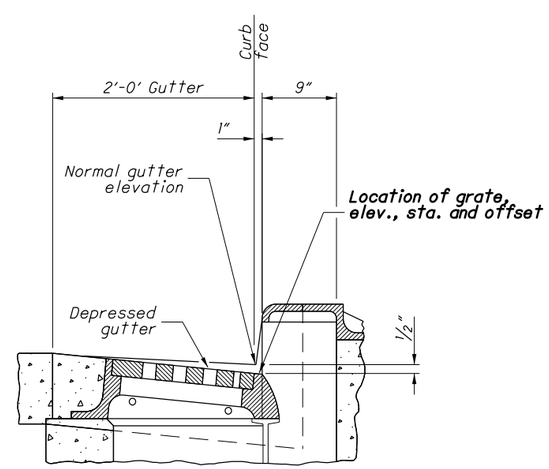

SECTION B-B
WITH CURB & GUTTER
(½" DEPRESSION)

NOTES

GRATES: Two required. For details, see **SCD CB-2.2.** Provide Grate "V" unless the plans specifically require the diagonal grate. If the diagonal grate is specified, place it so that the diagonal bars direct drainage flow toward the curb.

CASTINGS: Provide a design essentially the same and equally as strong as the one shown. Minimum weight:

Curb Casting . . . . . 305 lbs.
Two Grates . . . . . 254 lbs.
Frame . . . . . 590 lbs.
Two Grate "V" . . . . 210 lbs.

Lighter weight frames and grates that meet the requirements of CMS 711.14 may also be provided. Provide grate openings and dimensions as shown here unless otherwise shown in the plans.

Cast the following text into the top of the curb casting:

"DUMP NO WASTE" and **"DRAINS TO WATERWAY"**

Print text in bold, capital letters at least ¾" high. See example on Plan & Section. "WATERWAY" may be substituted with "STREAM", "RIVER", "LAKE", etc. Actual placement and logo may vary per manufacturer.

BEARING AREAS: Fit and finish the frame and grate to provide a firm and even seat. No projections are permitted on bearing areas, and the grate must seat in its frame without rocking.

WALLS: When used in place of concrete, construct brick side walls with 8" nominal thickness.

PRECAST CONSTRUCTION: Permitted, except for the apron. Meet CMS 706.13 concrete requirements. Provide precast walls at least 6" thick with sufficient reinforcing to permit shipping and placement without damage. Reduce the wall thickness from the outside.

MINIMUM DEPTH: The minimum depth is per the cover requirements for that pipe type.

OPENINGS: Obtain the Engineer's approval for any pipe openings greater than 4" from the outside of the pipe to the structure. Fill all voids per CMS 611.

DOWELS: Furnish four 1"x18" dowels for concrete pavement or gutter blockout. See **SCD BP-2.2** for dowel details.

BLOCKOUT: Pave blockouts with 4000 psi compressive strength concrete in PCC pavement or gutter. Blockouts are paid for as part of the pavement or gutter with no deduction in pavement, curb or gutter quantities because of the castings. Cast a 4000 psi compressive strength concrete apron, the size of the 2'-0" gutter blockout, in place in asphalt pavement (no dowels required) with the cost included in the catch basin bid price. No deduction is made in curb quantities.

PAYMENT: All materials and labor, including excavation and backfilling, are paid for under **Item 611 - Catch Basin, No. 3A.**

CATCH BASIN No. 3A

STATE OF OHIO DEPARTMENT OF TRANSPORTATION
STATE HYDRAULIC ENGINEER

REVISIONS
7-20-01
7-19-02
7-15-05
7-20-12
1-18-13

ROADWAY HYDRAULIC ENGINEER
Matt Cozzoli

OFFICE OF HYDRAULIC ENGINEERING

STANDARD HYDRAULIC CONSTRUCTION DRAWING
CATCH BASIN No. 3A

SCD NUMBER
CB-2.2

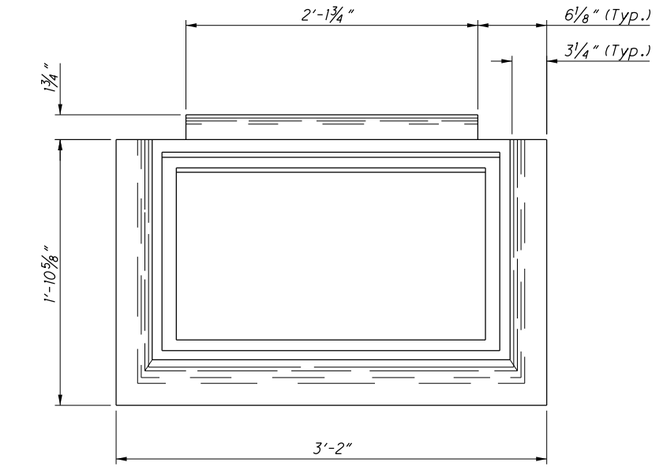

PLAN

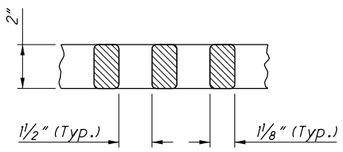

SECTION D-D
(See Sht. 1/2.)

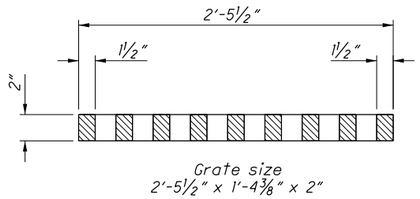

SECTION C-C
DIAGONAL GRATE
(See Sht. 1/2)

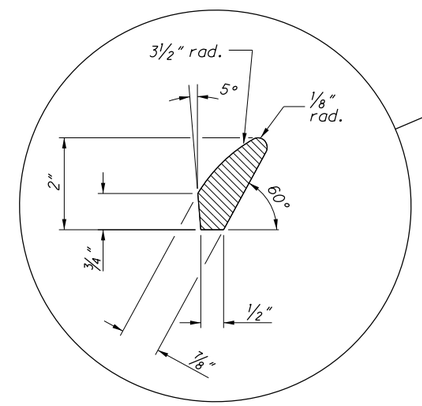

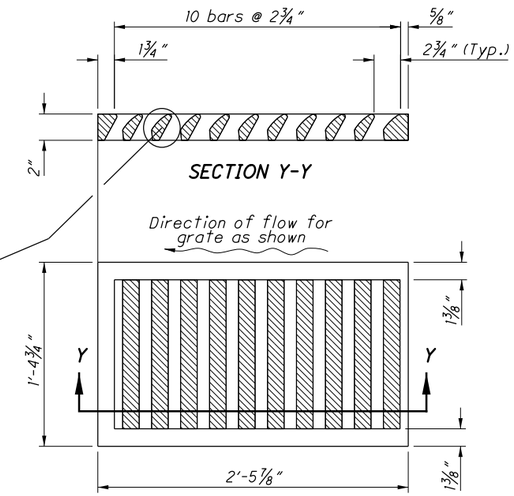

SECTION Y-Y

PLAN
GRATE "V"

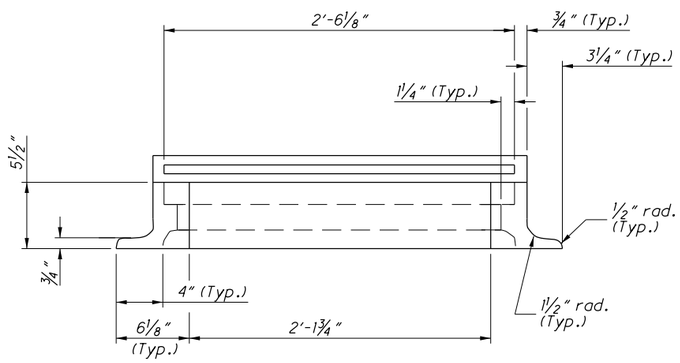

BACK VIEW

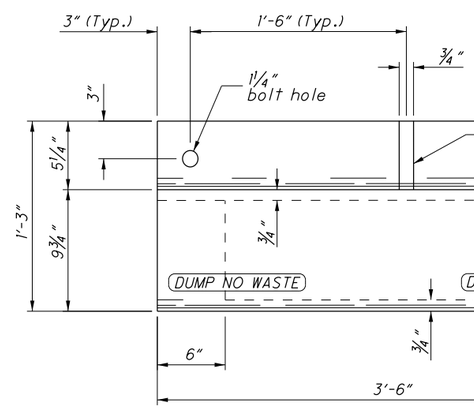

PLAN

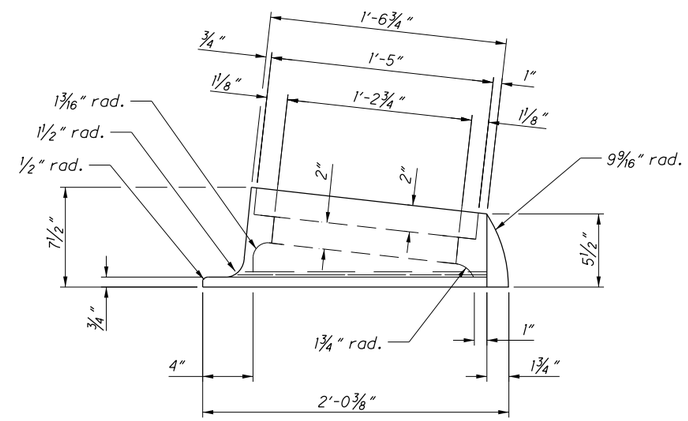

END VIEW FRAME

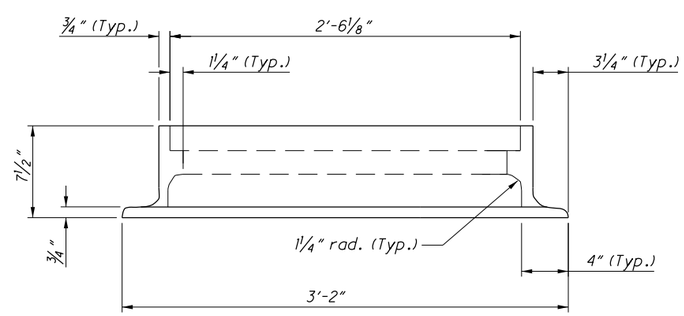

FRAME
FRONT VIEW

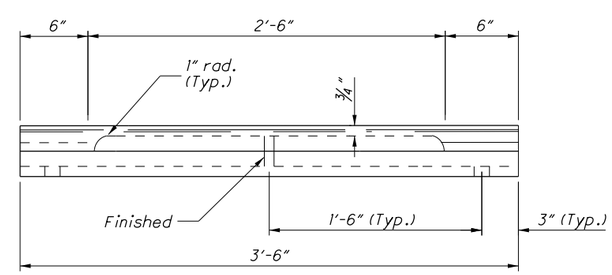

FRONT VIEW
CURB CASTING

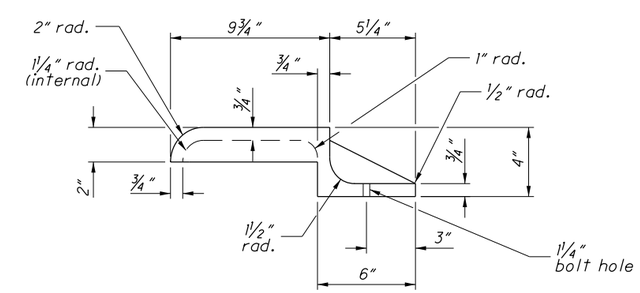

END VIEW
CURB CASTING

STATE OF OHIO DEPARTMENT OF TRANSPORTATION

STATE HYDRAULIC ENGINEER

REVISIONS
7-20-01
7-19-02
7-15-05
7-20-12
1-18-13

ROADWAY HYDRAULIC ENGINEER
Matt Cozzoli

OFFICE OF HYDRAULIC ENGINEERING

STANDARD HYDRAULIC CONSTRUCTION DRAWING

CATCH BASIN No. 3A

SCD NUMBER
CB-2.2

2 / 2

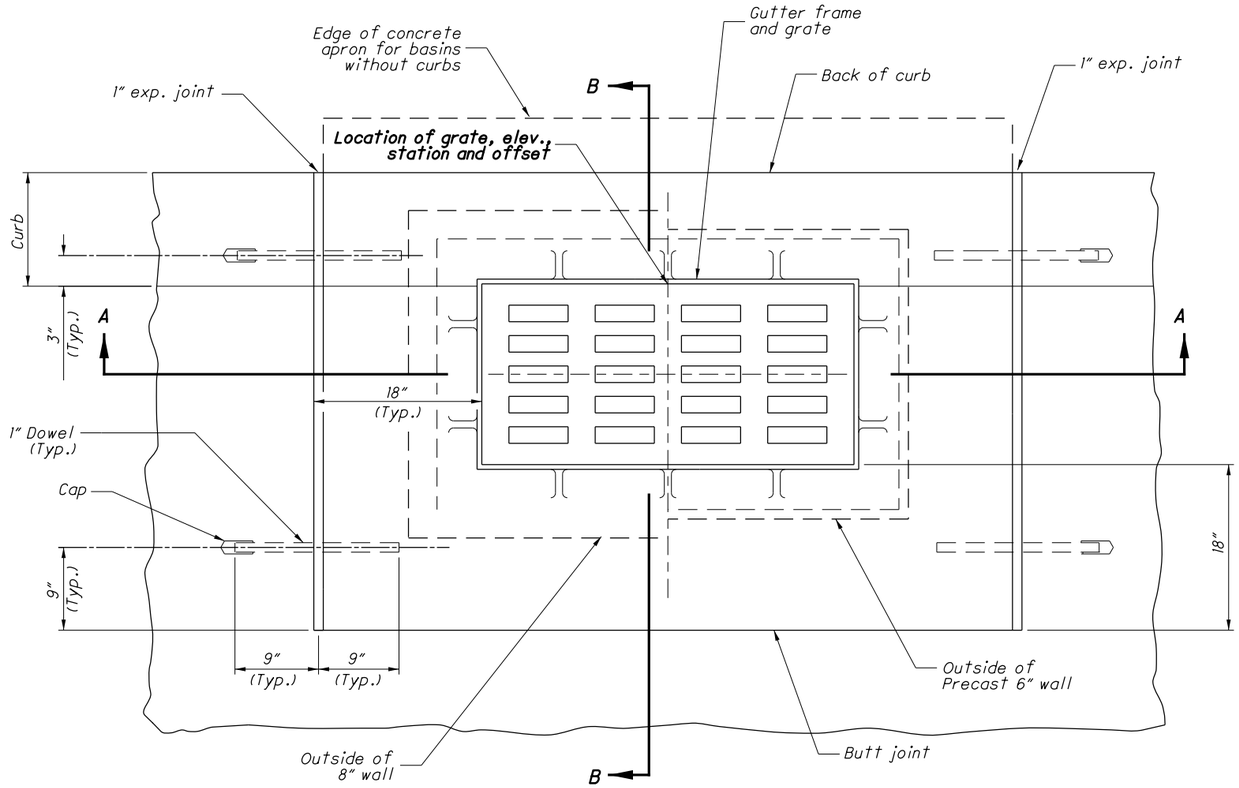

See Sht. 2/2 for Sections

PLAN OF CATCH BASINS AND PAVEMENT JOINTS

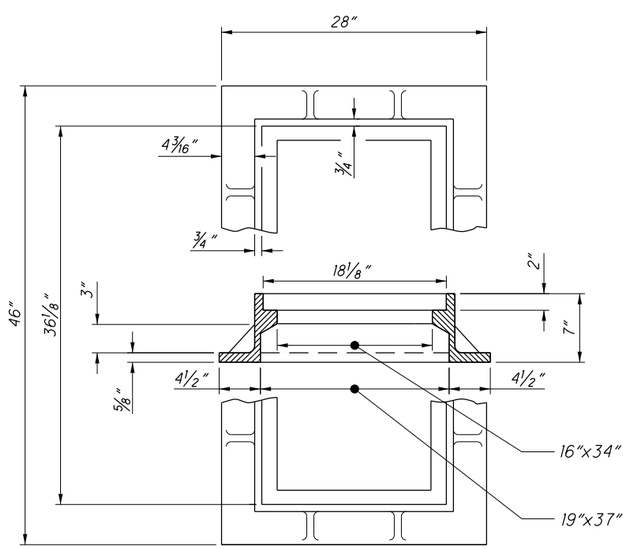

FRAME

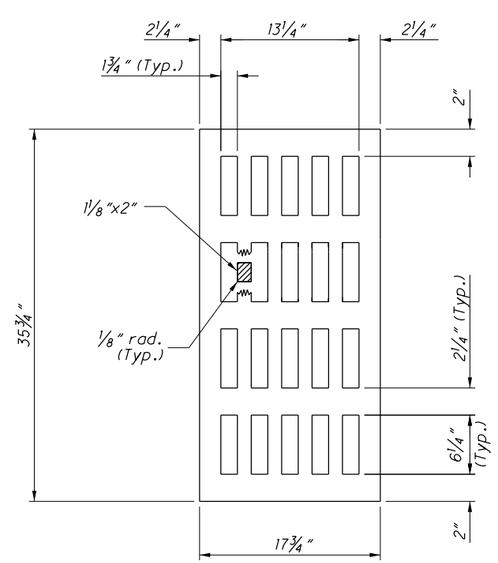

GRATE

NOTES

GRATE AND FRAME: Provide a design essentially the same and equally as strong as the one shown (see construction information table), or meet the requirements of CMS 711.14. Provide grate openings and dimensions as shown here unless otherwise shown in the plans.

Cast the following text into the top of the grate:

"DUMP NO WASTE" and **"DRAINS TO WATERWAY"**

Print text in bold, capital letters at least ½" high. "WATERWAY" may be substituted with "STREAM", "RIVER", "LAKE", etc. Actual placement and logo may vary per manufacturer.

BEARING AREAS: Fit and finish frame and grate to provide a firm and even seat for all portions of the grate in the frame. No projections are permitted on bearing areas of either casting, and the grate must seat in its frame without rocking. Fit, match and mark frame and grate before delivery to the project.

WALLS: Construct brick or cast-in-place walls with a nominal thickness of 8". Provide precast walls at least 6" thick with sufficient reinforcing to permit shipping and handling without damage.

CONCRETE: Use 4000 psi for cast-in-place concrete. Meet the requirements of CMS 706.13 for precast concrete and mark with the catch basin number. Reduce the wall thickness from the outside.

MINIMUM DEPTH: The minimum depth is the outside diameter (O.D.) of the outlet pipe plus 15".

OPENINGS: Obtain the Engineer's approval for any pipe openings greater than 4" from the outside of the pipe to the structure. Fill all voids per CMS 611.

DOWELS: Furnish four 1"x18" dowels for pavement and curb. See **SCD BP-2.2** for dowel detail.

BLOCKOUT APRONS: Use 4000 psi compressive strength concrete. Cost of apron is not included in catch basin price when located in PCC pavement, and no deduction in normal pavement quantities is made because of blockout. When adjacent paving is asphalt, omit the dowels, and the cost of the concrete apron is included in the catch basin bid price. Cost of curb, if any, is included in CMS 609. For basins without curb, the grate elevation is 1" below the normal pavement slope measured at the center of the grate.

PAYMENT: All materials and labor, including excavation and backfilling, are paid for under **Item 611 - Catch Basin, No. 6.**

CONSTRUCTION INFORMATION
Minimum weight of grate, 210 lbs.
Minimum weight of frame, 265 lbs.

STATE OF OHIO DEPARTMENT OF TRANSPORTATION

STATE HYDRAULIC ENGINEER

REVISIONS
7-20-01
7-19-02
7-15-05
7-20-12
1-18-13

ROADWAY HYDRAULIC ENGINEER
Matt Cozzoli

OFFICE OF HYDRAULIC ENGINEERING

STANDARD HYDRAULIC CONSTRUCTION DRAWING

CATCH BASIN No. 6

SCD NUMBER
CB-2.3

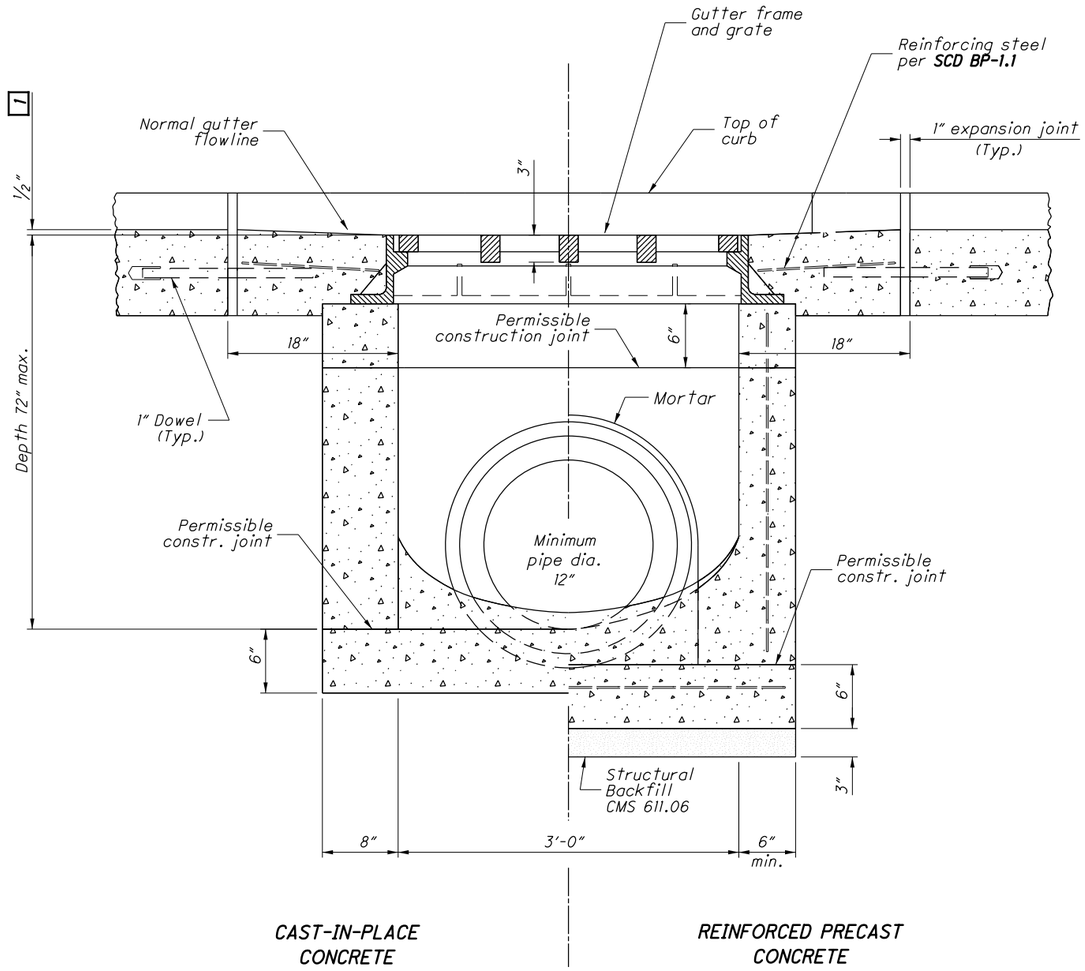

SECTION A-A

(See Sht. 1/2.)

1 Unless otherwise shown on plans

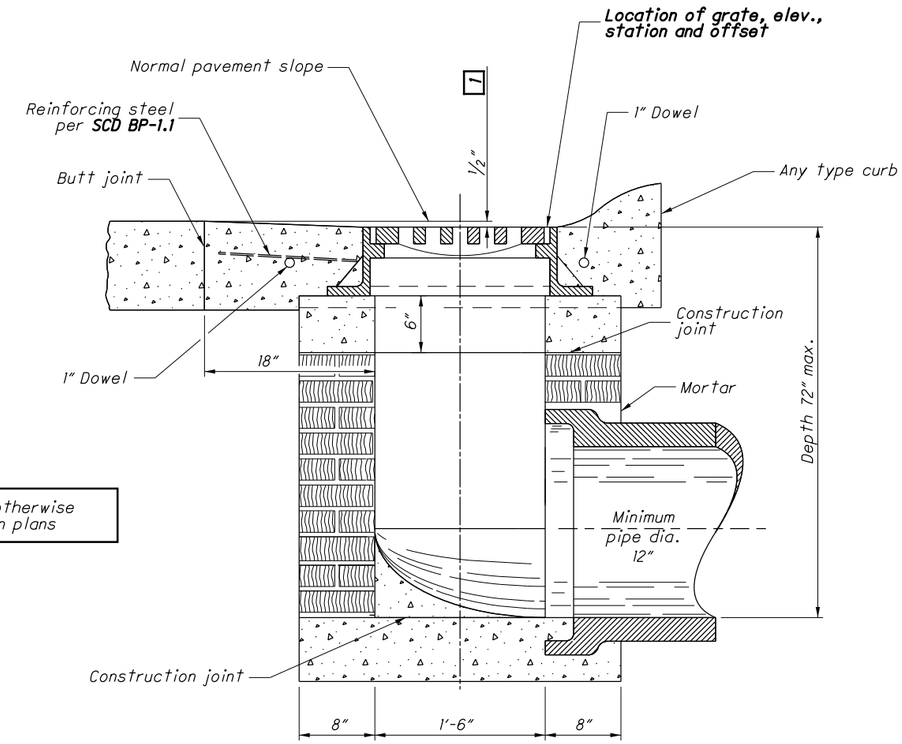

SHOWN WITH BRICK WALLS

SECTION B-B

(See Sht. 1/2.)

CATCH BASIN No. 6

STATE OF OHIO DEPARTMENT OF TRANSPORTATION

STATE HYDRAULIC ENGINEER

REVISIONS
7-20-01
7-19-02
7-15-05
7-20-12
1-18-13

ROADWAY HYDRAULIC ENGINEER
Matt Cozzoli

OFFICE OF HYDRAULIC ENGINEERING

STANDARD HYDRAULIC CONSTRUCTION DRAWING

CATCH BASIN No. 6

SCD NUMBER
CB-2.3

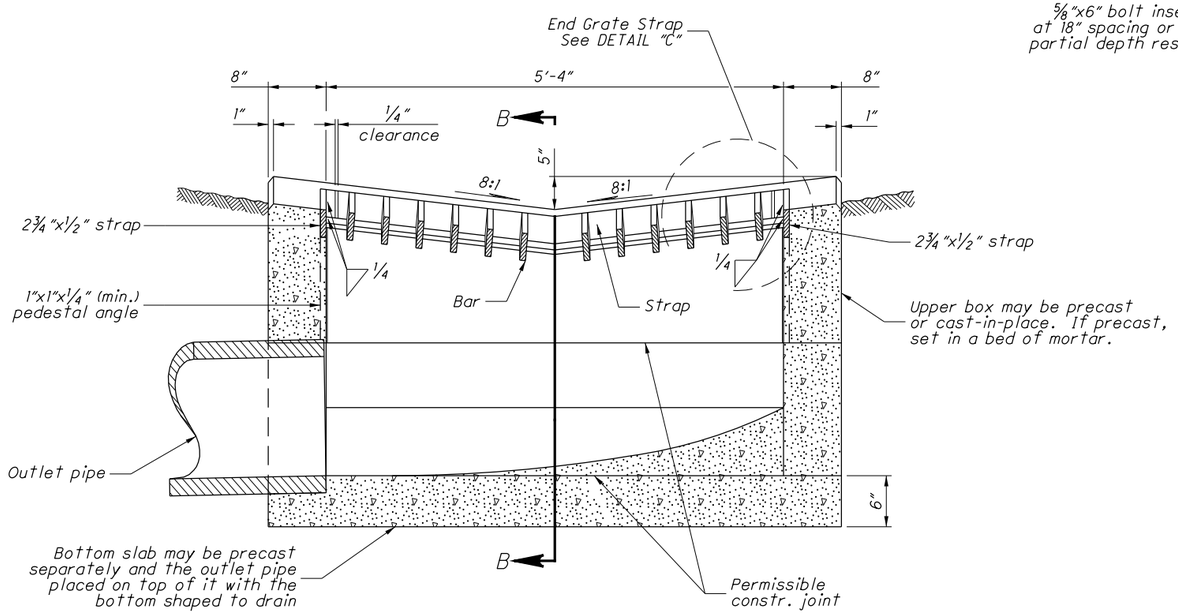

SECTION A-A

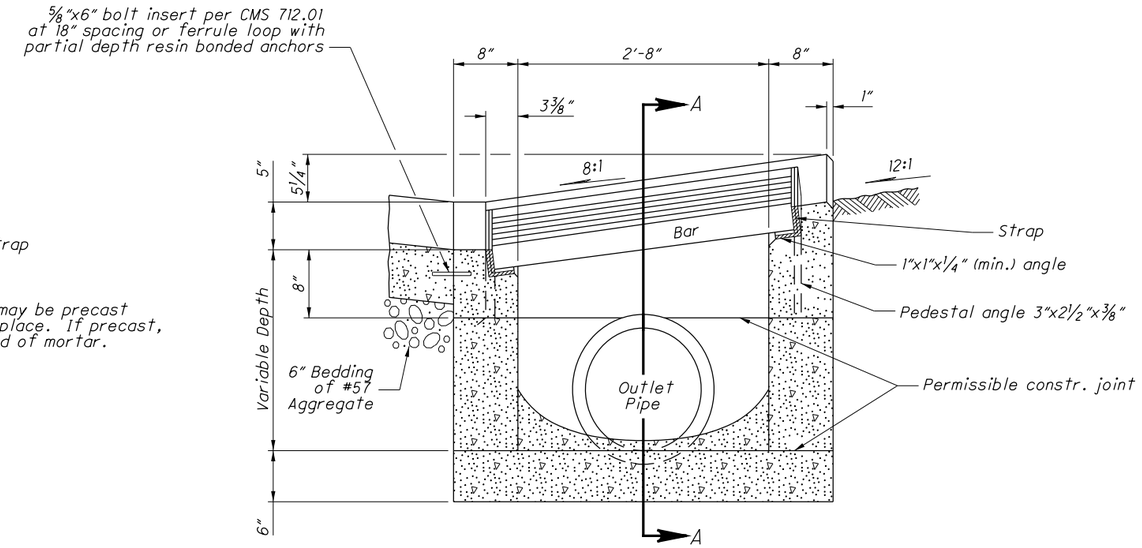

SECTION B-B

See Sht. 2/2 for Notes

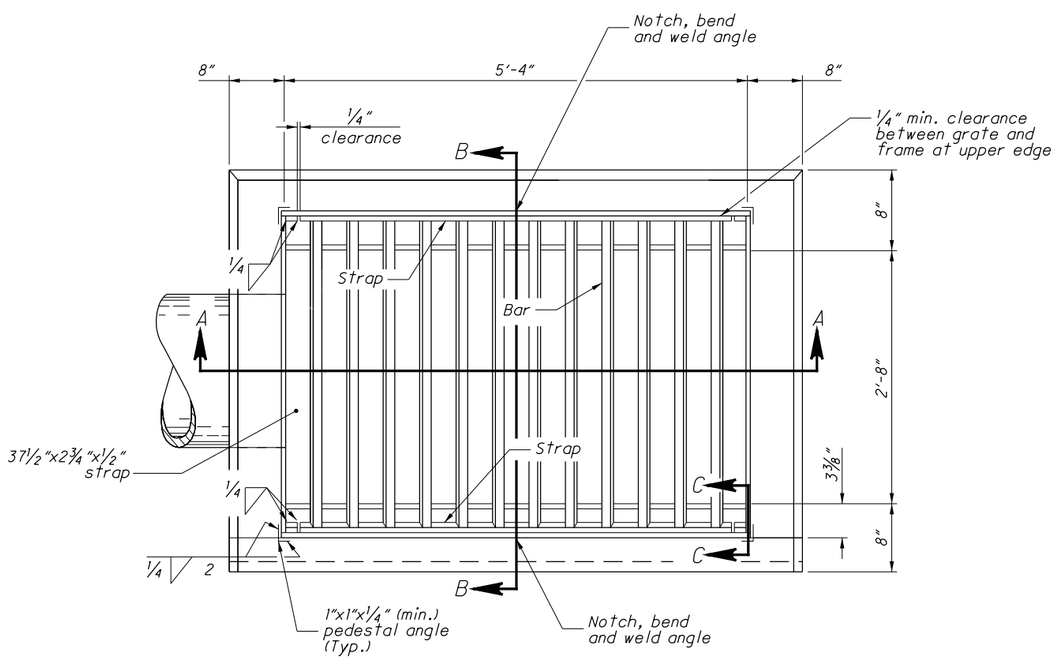

PLAN OF CATCH BASIN

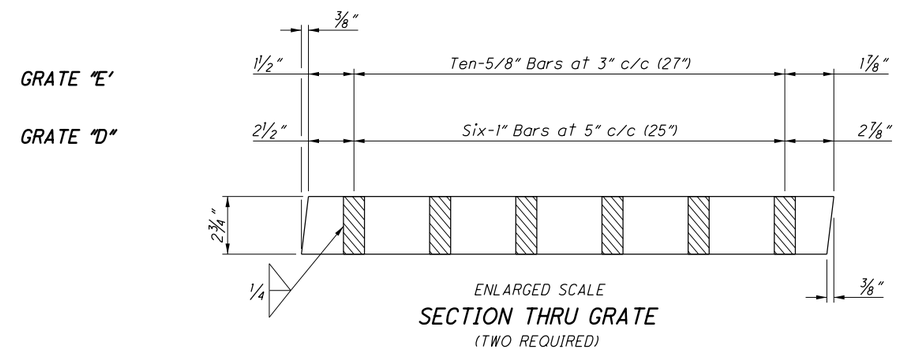

SECTION THRU GRATE
(TWO REQUIRED)

NOTE: 1"x1"x1/4" pedestal angles not shown

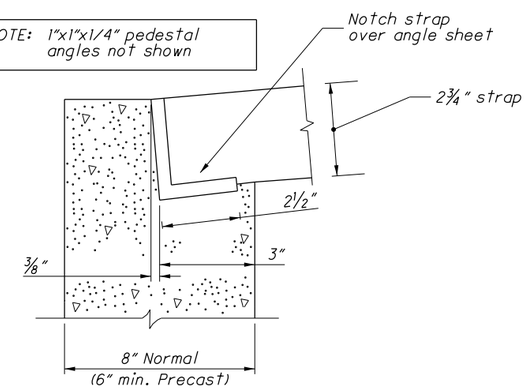

SECTION C-C

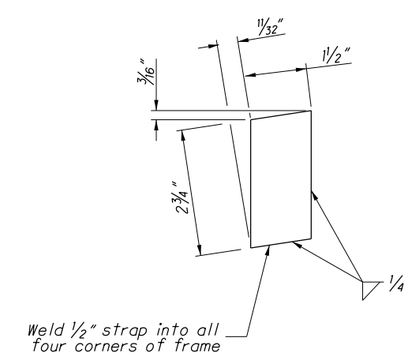

END GRATE STRAP
DETAIL "C"
(See SECTION A-A)

CATCH BASIN No. 4

STATE OF OHIO DEPARTMENT OF TRANSPORTATION
STATE HYDRAULIC ENGINEER

REVISIONS
7-20-01
7-19-02
7-15-05
7-20-12
1-18-13

ROADWAY HYDRAULIC ENGINEER
Matt Cozzoli

OFFICE OF HYDRAULIC ENGINEERING

STANDARD HYDRAULIC CONSTRUCTION DRAWING
CATCH BASIN No. 4

SCD NUMBER
CB-3.1

1 / 2

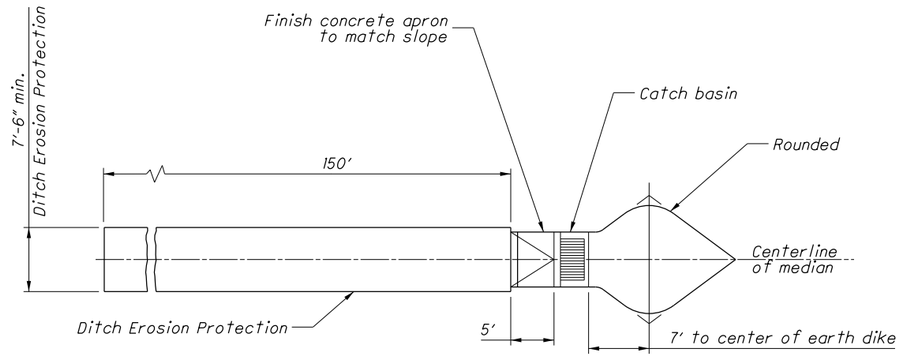

PLAN

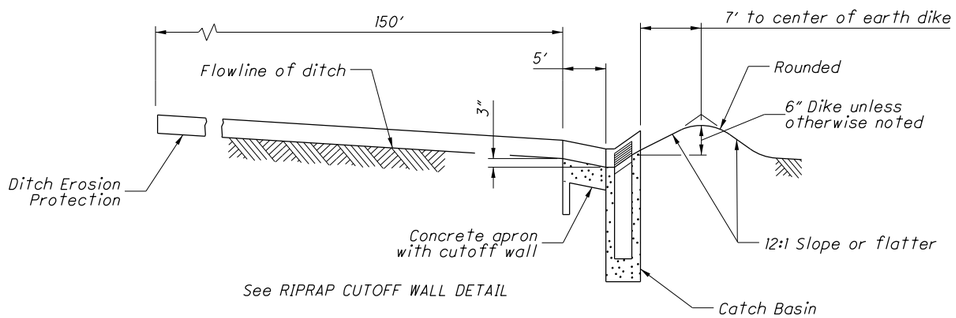

VERTICAL SCALE WALL DETAIL

PROFILE

MEDIAN GRADING AT CATCH BASIN

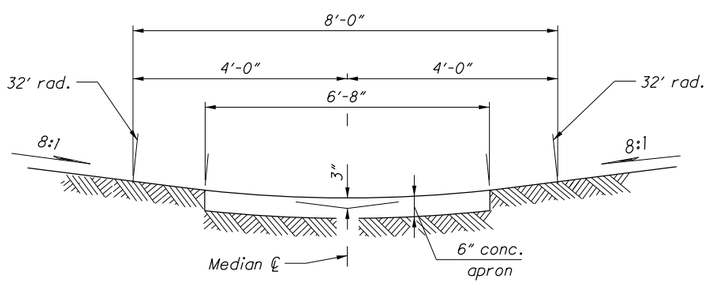

UPSTREAM END VIEW OF

CONCRETE APRON OR GROUTED RIPRAP

CONSTRUCTION INFORMATION
Typical weight of grate = 375 lbs. Typical weight of frame = 100 lbs.

NOTES

GRATE AND FRAME: Use structural steel according to CMS 711.01 and 513. Provide a design essentially the same and equally as strong as the one shown.

GRATE: Depress the grate 3" below the upstream end of the concrete apron at the centerline of the median. Furnish and install Grate "D" unless Grate "E" is specifically required by the plans.

WALLS: Construct brick or cast-in-place walls with a nominal thickness of 8" from the bottom slab to the upper box.

PRECAST CONSTRUCTION: Permitted, except for the apron. Meet the concrete requirements of CMS 706.13. Provide precast walls at least 6" thick with sufficient reinforcing to permit shipping and placement without damage. Reduce the wall thickness from the outside.

STEPS: Provide steps meeting the requirements of **SCD MH-1.1** where the depth exceeds 6'.

BASINS OVER 12 FEET DEEP: Use precast or cast-in-place concrete; reinforce with #4 bars on 12" centers both vertically and horizontally with 2" clearance from inside wall face.

LOCATION AND ELEVATION: When given on the plans, location is the center of the grate. The elevation is the lowest point on the grate.

OPENINGS: Obtain the Engineer's approval for any pipe openings greater than 4" from the outside of the pipe to the structure. Fill all voids per CMS 611.

CONCRETE APRONS: Construct aprons in such a manner that the outside edges are at equal elevations.

If specified in the plans, grouted riprap may be used in place of the concrete apron.

DITCH PROTECTION: Provide a 150' length of ditch erosion protection as shown. Installation and payment for the ditch erosion protection are per CMS 670.

BASINS IN SAG: When in a sag, omit the earth dike and longitudinal slope of the grate, and provide concrete apron and ditch protection on each side of the basin.

PAYMENT: The concrete apron with cutoff wall or grouted riprap and dike are incidental to **Item 611 - Catch Basin, No. 4.** However, the apron is not required when **Item 611 - Catch Basin, No. 4, Without Apron,** is specified.

When itemized separately, payment for Item 601 Riprap using 6" Reinforced Concrete Slab includes the cost of the cutoff wall.

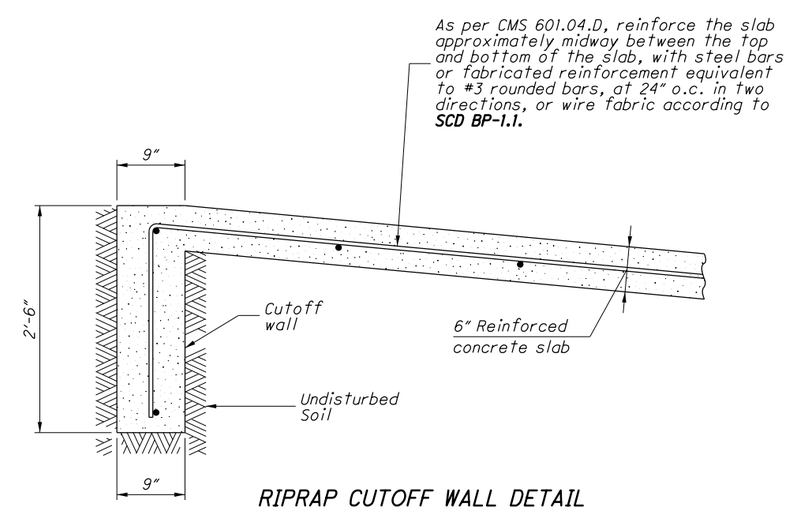

RIPRAP CUTOFF WALL DETAIL

STATE OF OHIO DEPARTMENT OF TRANSPORTATION

STATE HYDRAULIC ENGINEER

REVISIONS
7-20-01
7-19-02
7-15-05
7-20-12
1-18-13

ROADWAY HYDRAULIC ENGINEER
Matt Cozzoli

OFFICE OF HYDRAULIC ENGINEERING

STANDARD HYDRAULIC CONSTRUCTION DRAWING

CATCH BASIN No. 4

SCD NUMBER
CB-3.1

2 / 2

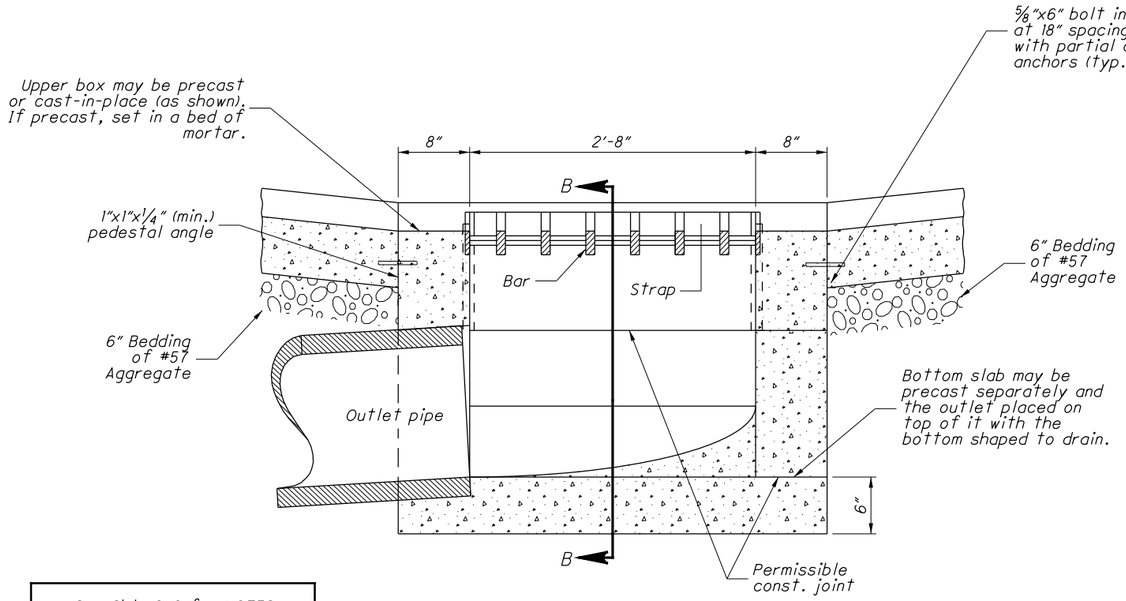

See Sht. 2/2 for NOTES

SECTION A-A

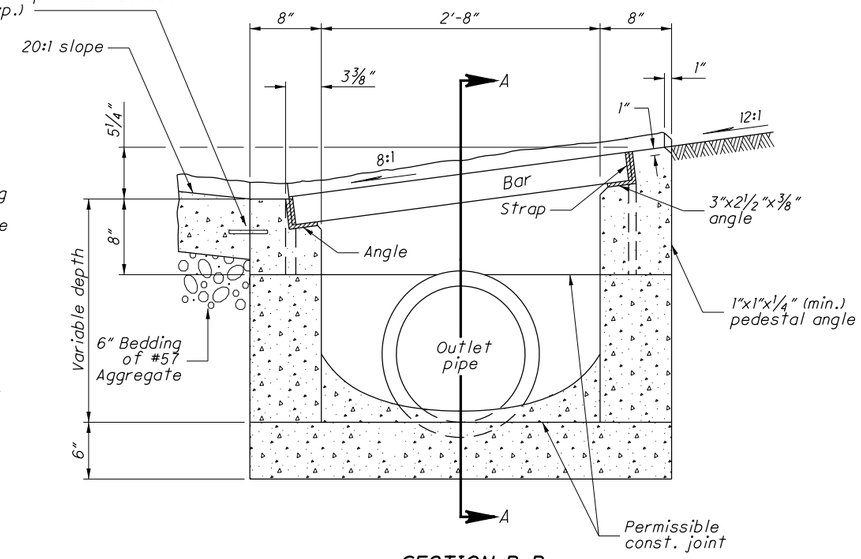

SECTION B-B

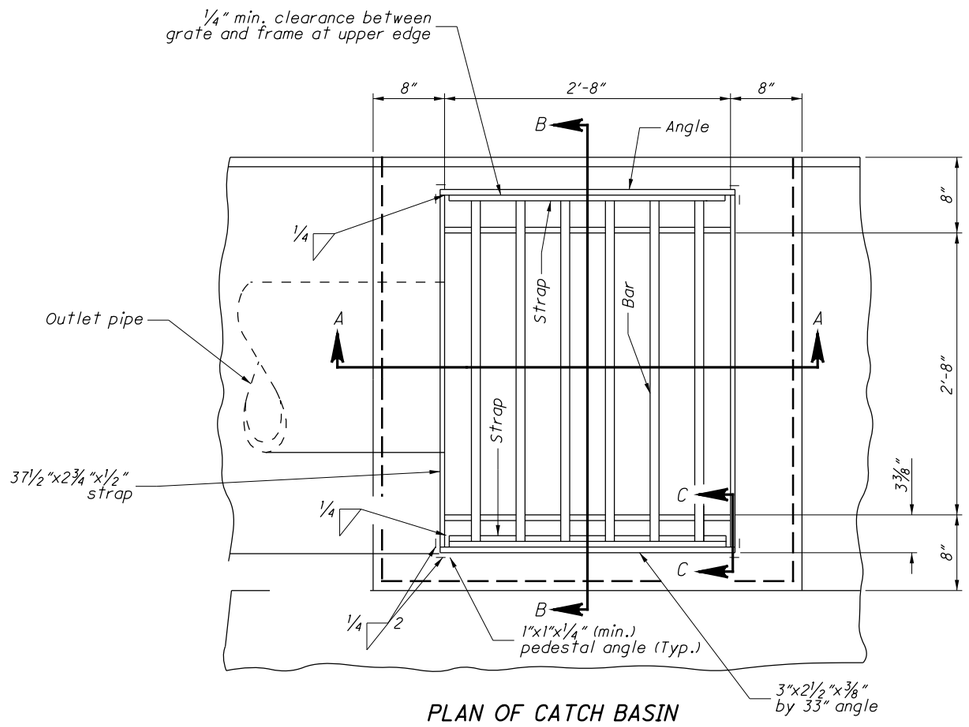

PLAN OF CATCH BASIN

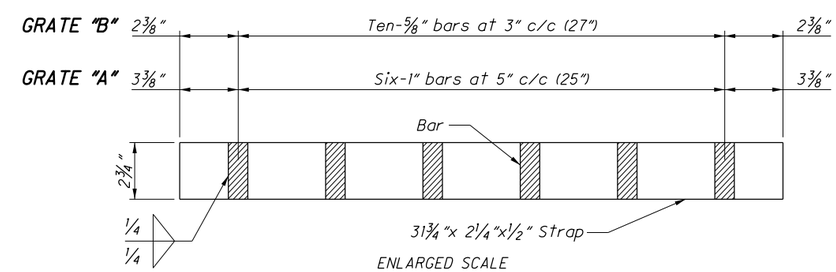

SECTION THRU GRATE

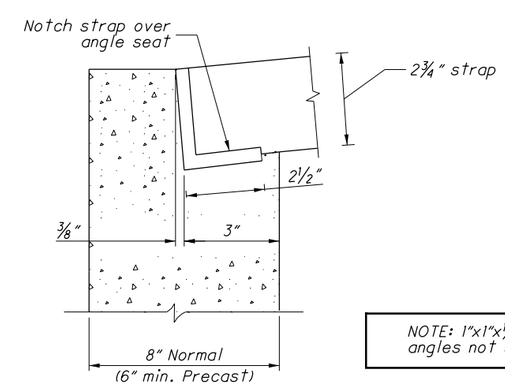

NOTE: 1"x1"x1/4" pedestal angles not shown

SECTION C-C

CATCH BASIN No. 5

STATE OF OHIO DEPARTMENT OF TRANSPORTATION

STATE HYDRAULIC ENGINEER

REVISIONS
7-20-01
7-19-02
7-15-05
7-20-12
1-18-13

ROADWAY HYDRAULIC ENGINEER
Matt Cozzoli

OFFICE OF HYDRAULIC ENGINEERING

STANDARD HYDRAULIC CONSTRUCTION DRAWING

CATCH BASIN No. 5

SCD NUMBER
CB-3.2

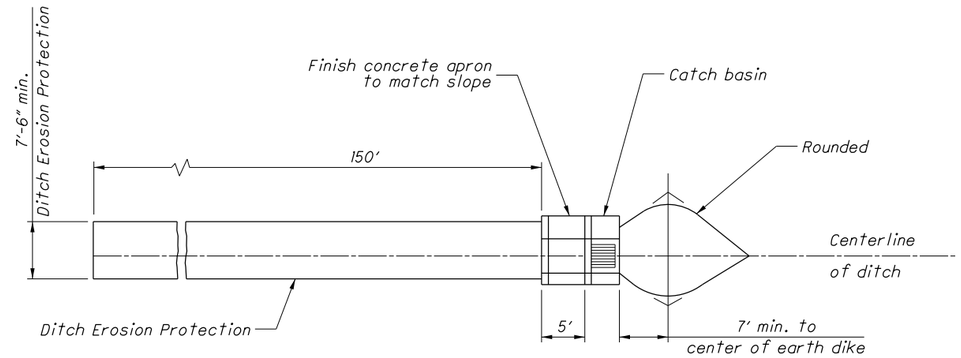

PLAN

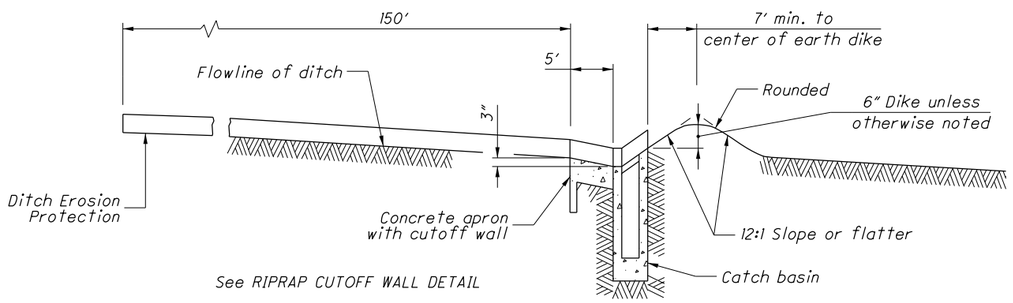

VERTICAL SCALE DISTORTED

PROFILE

ROADSIDE DITCH GRADING AT CATCH BASIN

NOTES

GRATE AND FRAME: Use structural steel according to CMS 711.01 and 513. Provide a design essentially the same and equally as strong as the one shown.

GRATE: Depress the grate 3" below the upstream end of the concrete apron at the centerline of the ditch. Furnish and install Grate "A" unless Grate "B" is specifically required by the plans.

WALLS: Construct brick or cast-in-place walls with a nominal thickness of 8" from the bottom slab to the upper box.

PRECAST CONSTRUCTION: Permitted, except for the apron. Meet the concrete requirements of CMS 706.13. Provide precast walls at least 6" thick with sufficient reinforcing to permit shipping and placement without damage. Reduce the wall thickness from the outside.

STEPS: Provide steps meeting the requirements of **SCD MH-1** where the depth exceeds 6'.

BASINS OVER 12 FEET DEEP: Use precast or cast-in-place concrete; reinforce with #4 bars on 12" centers both vertically and horizontally with 2" clearance from inside wall face.

LOCATION AND ELEVATION: When given on the plans, the location is the center of the grate. The elevation is the lowest point on the grate.

OPENINGS: Obtain the Engineer's approval for any pipe openings greater than 4" from the outside of the pipe to the structure. Fill all voids per CMS 611.

CONCRETE APRONS: Cosntruct aprons in such a manner that the outside edges are at equal elevations.

If specified in the plans, grouted riprap may be used in place of the concrete apron.

DITCH PROTECTION: Provide a 150' length of ditch erosion protection as shown. Installation and payment for ditch erosion protection are per CMS 670.

BASINS IN SAG: When in a sag, omit the earth dike and longitudinal slope of the grate, and provide concrete apron and ditch protection on each side of the basin.

PAYMENT: The concrete apron with cutoff wall or grouted riprap and dike are incidental to **Item 611 - Catch Basin, No. 5.** However, the apron is not required when **Item 611 - Catch Basin, No. 5 Without Apron,** is specified.

When itemized separately, payment for Item 601 Riprap using 6" Reinforced Concrete Slab includes the cost of the cutoff wall.

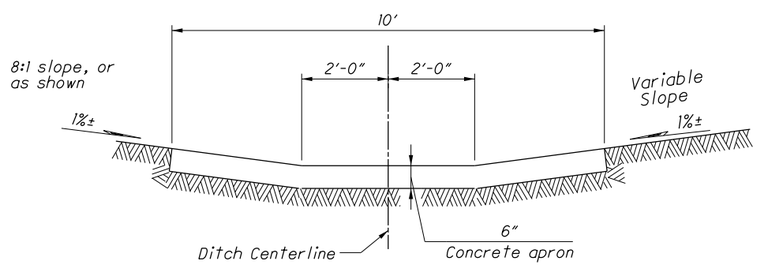

UPSTREAM END VIEW OF CONCRETE APRON OR GROUTED RIPRAP

CONSTRUCTION INFORMATION
Typical weight of grate = 185 lbs. Typical weight of frame = 60 lbs.

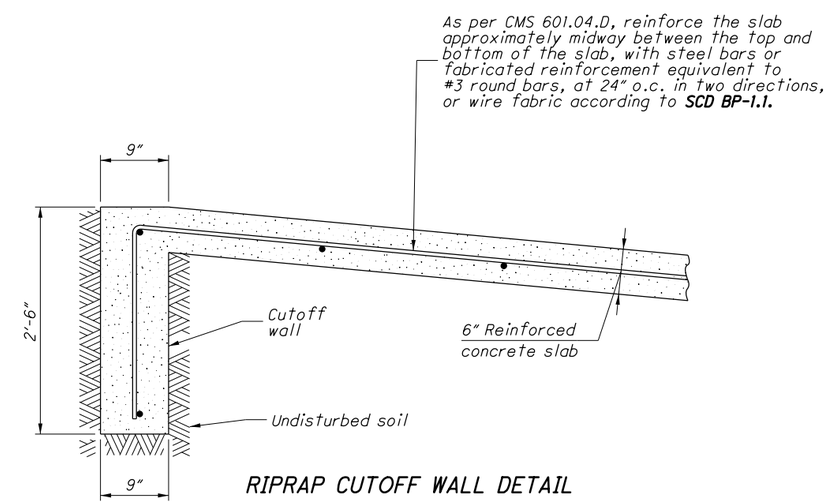

RIPRAP CUTOFF WALL DETAIL

STATE OF OHIO DEPARTMENT OF TRANSPORTATION

STATE HYDRAULIC ENGINEER

REVISIONS
7-20-01
7-19-02
7-15-05
7-20-12
1-18-13

ROADWAY HYDRAULIC ENGINEER
Matt Cozzoli

OFFICE OF HYDRAULIC ENGINEERING

STANDARD HYDRAULIC CONSTRUCTION DRAWING

CATCH BASIN No. 5

SCD NUMBER
CB-3.2

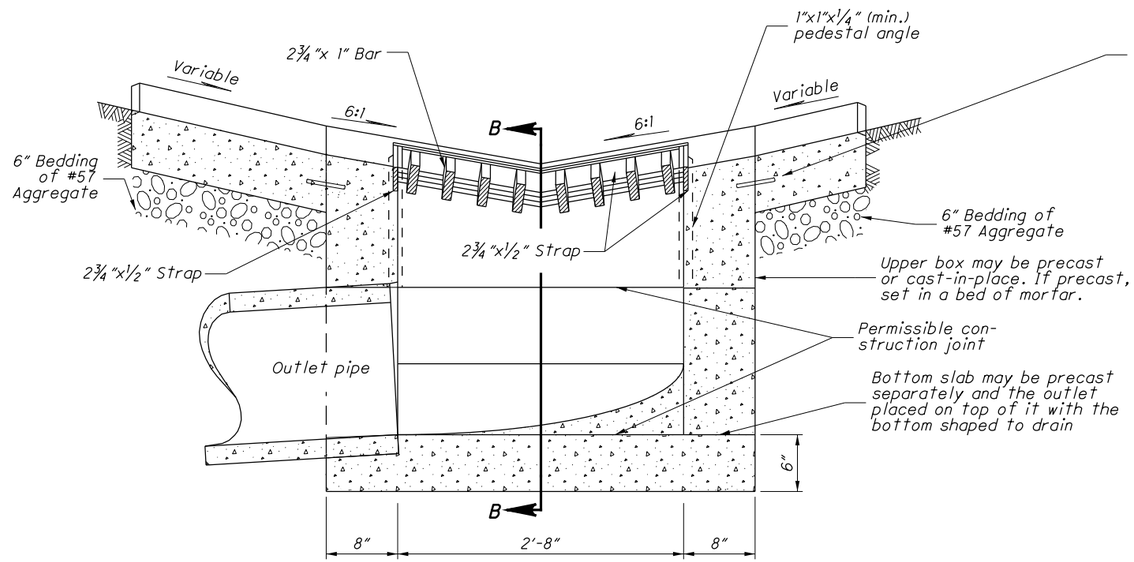

SECTION A-A

See Sht. 2/2 for NOTES

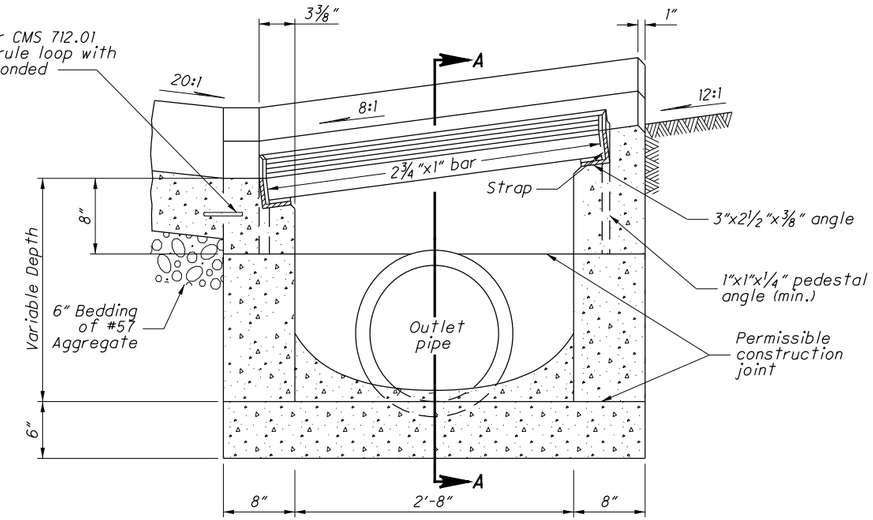

SECTION B-B

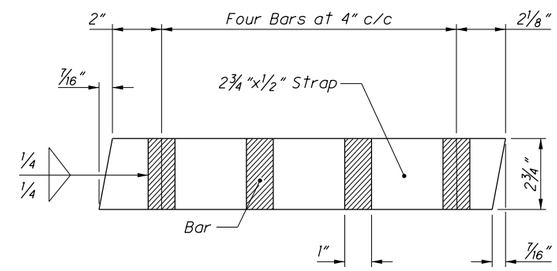

SECTION THRU HALF OF GRATE "C"

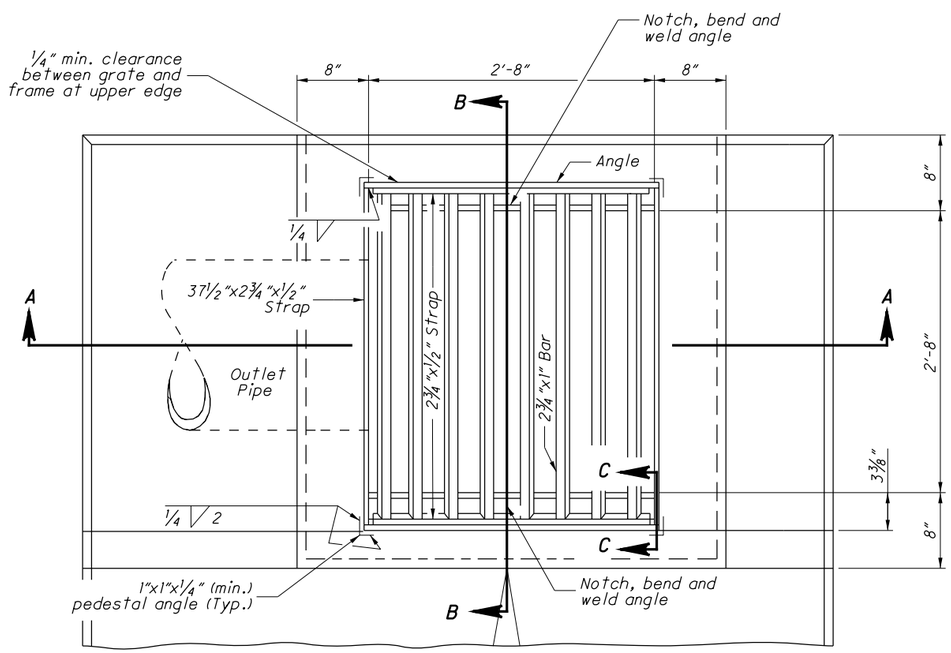

PLAN OF CATCH BASIN

NOTE: 1"x1"x¼" pedestal angles not shown

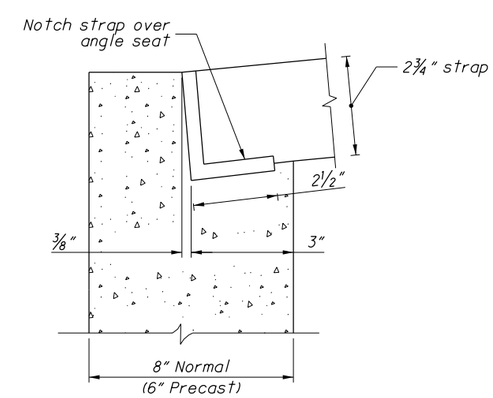

SECTION C-C

CATCH BASIN No. 8

STATE OF OHIO DEPARTMENT OF TRANSPORTATION

STATE HYDRAULIC ENGINEER

REVISIONS
7-20-01
7-19-02
7-15-05
7-20-12
1-18-13

ROADWAY HYDRAULIC ENGINEER
Matt Cozzoli

OFFICE OF HYDRAULIC ENGINEERING

STANDARD HYDRAULIC CONSTRUCTION DRAWING

CATCH BASIN No. 8

SCD NUMBER
CB-3.3

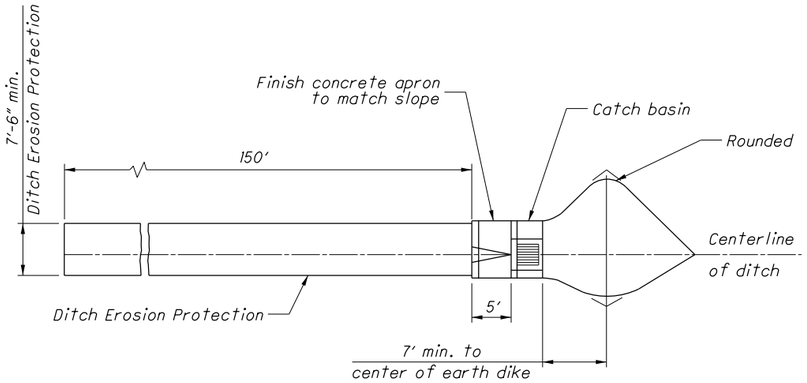

PLAN

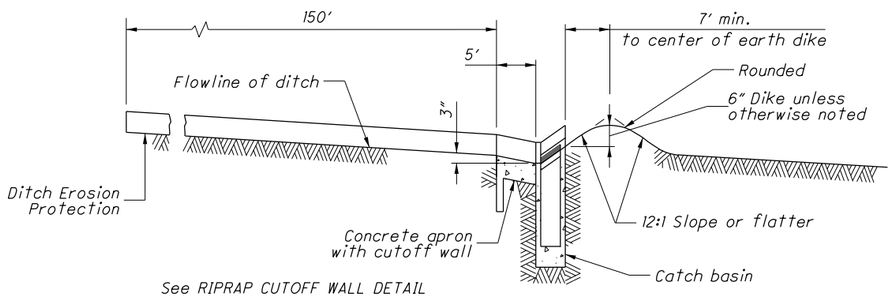

VERTICAL SCALE DISTORTED

PROFILE

MEDIAN GRADING AT CATCH BASIN

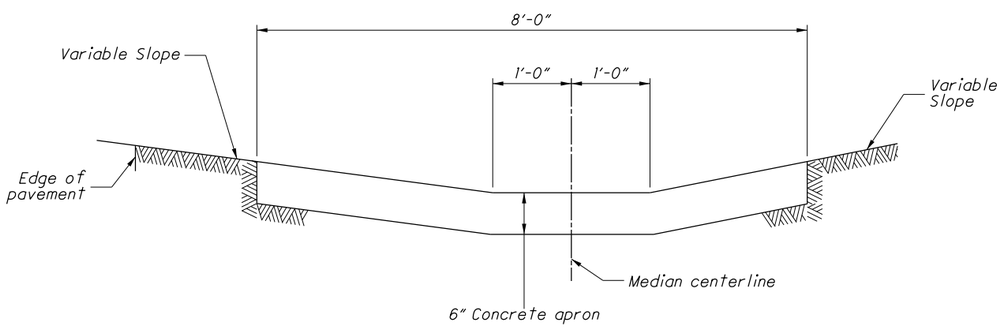

UPSTREAM END VIEW OF
CONCRETE APRON OR GROUTED RIPRAP

CONSTRUCTION INFORMATION
Typical weight of grate = 245 lbs. Typical weight of frame = 65 lbs.

NOTES

GRATE AND FRAME: Use structural steel according to CMS 711.01 and 513. Provide a design essentially the same and equally as strong as the one shown.

GRATE: Depress the grate 3" below the upstream end of the concrete apron at the centerline of the ditch.

WALLS: Construct brick or cast-in-place walls with a nominal thickness of 8" from the bottom slab to the upper box.

PRECAST CONSTRUCTION: Permitted, except for the apron. Meet the concrete requirements of CMS 706.13. Provide precast walls at least 6" thick with sufficient reinforcing to permit shipping and placement without damage. Reduce the wall thickness from the outside.

STEPS: Provide steps meeting the requirements of **SCD MH-1.1** where the depth exceeds 6'.

BASINS OVER 12 FEET DEEP: Use precast or cast-in-place concrete; reinforce with #4 bars on 12" centers both vertically and horizontally with 2" clearance from inside wall face.

LOCATION AND ELEVATION: When given on the plans the location is at the center of the grate. The elevation is the lowest point on the grate.

OPENINGS: Obtain the Engineer's approval for any pipe openings greater than 4" from the outside of the pipe to the structure. Fill any voids per CMS 611.

CONCRETE APRONS: Construct aprons in such a manner that the outside edges are at equal elevations.

If specified in the plans, grouted riprap may be used in place of the concrete apron.

DITCH PROTECTION: Provide a 150' length of ditch erosion protection as shown. Installation and payment for the ditch erosion protection are per CMS 670.

BASINS IN SAG: When in a sag, omit the earth dike and longitudinal slope of grate, and provide concrete apron and ditch protection on each side of the basin.

PAYMENT: The concrete apron with cutoff wall or grouted riprap and dike are incidental to **Item 611 - Catch Basin, No. 8.** However, the apron is not required when **Item 611 - Catch Basin, No. 8, Without Apron,** is specified.

When itemized separately, payment for Item 601 Riprap using 6" Reinforced Concrete Slab includes the cost of the cutoff wall.

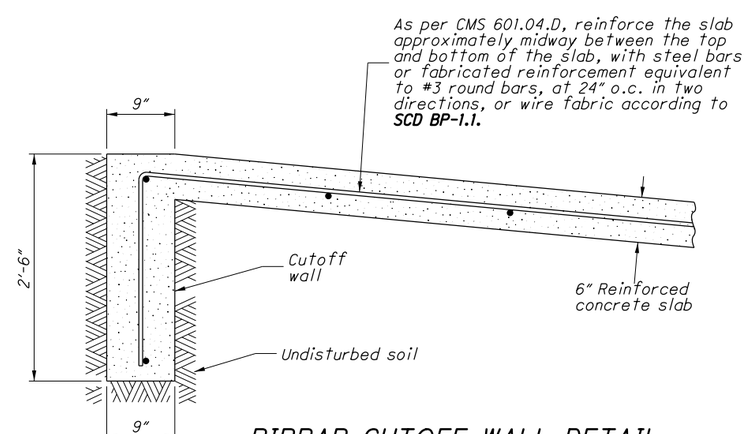

RIPRAP CUTOFF WALL DETAIL

STATE OF OHIO DEPARTMENT OF TRANSPORTATION

STATE HYDRAULIC ENGINEER

REVISIONS
7-20-01
7-19-02
7-15-05
7-20-12
1-18-13

ROADWAY HYDRAULIC ENGINEER
Matt Cozzoli

OFFICE OF HYDRAULIC ENGINEERING

STANDARD HYDRAULIC CONSTRUCTION DRAWING

CATCH BASIN No. 8

SCD NUMBER
CB-3.3

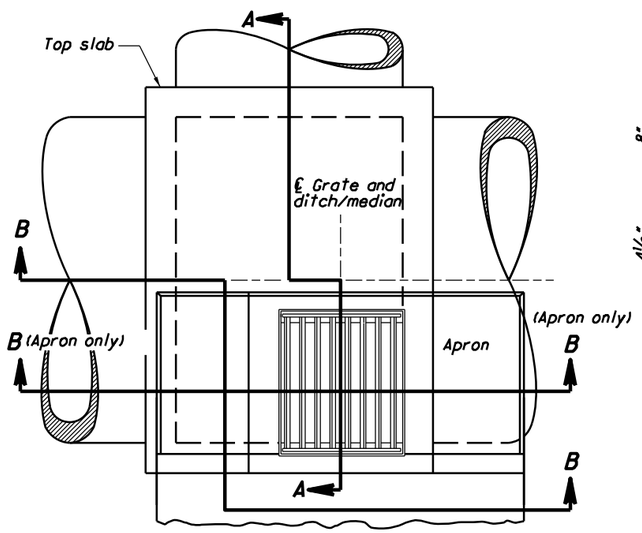

PLAN

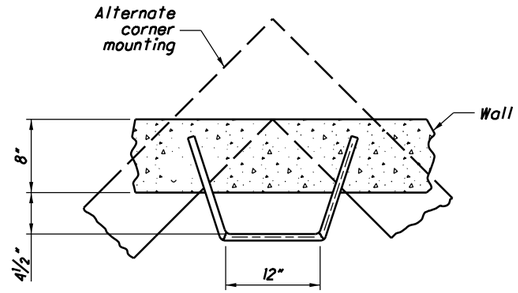

STEP DETAIL

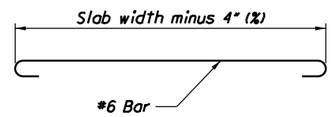

Bar length = % dimension + 16"

BENDING DIAGRAM

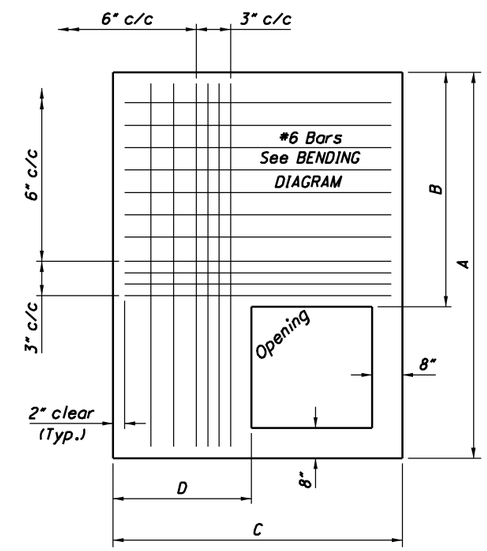

TOP SLAB DETAIL

TOP SLAB DIMENSIONS (English)						
PIPE DIAMETER	CB-4A				CB-5A & 8A	
	A	B	C	D	A or C	B or D
Under 42"	5'-4"	2'-0"	6'-8"	8"	5'-4"	2'-0"
42"	5'-7"	2'-3"	6'-8"	8"	5'-7"	2'-3"
48"	6'-2"	2'-10"	6'-8"	8"	6'-2"	2'-10"
54"	6'-9"	3'-5"	6'-9"	9"	6'-9"	3'-5"
60"	7'-4"	4'-0"	7'-4"	1'-4"	7'-4"	4'-0"
66"	7'-11"	4'-7"	7'-11"	1'-11"	7'-11"	4'-7"
72"	8'-6"	5'-2"	8'-6"	2'-6"	8'-6"	5'-2"

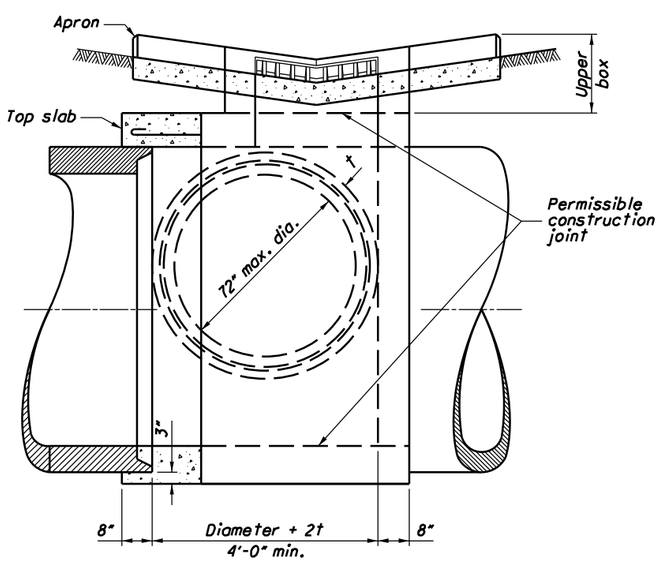

SECTION B-B

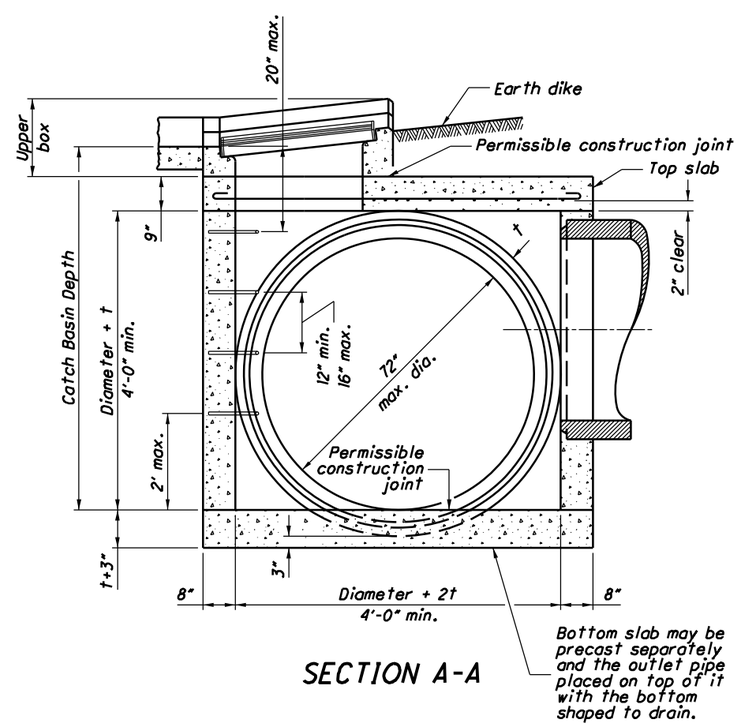

SECTION A-A

NOTES

DESIGN: The lower box, shown here, is designed for use with the upper boxes of **SCD CB-3.1, CB-3.2, and CB-3.3** (shown). See the appropriate drawing for specific details.

WALLS: Construct brick or cast-in-place walls with a nominal thickness of 8" from the bottom slab to the upper box.

PRECAST CONSTRUCTION: Permitted, except for the apron. Meet the concrete requirements of CMS 706.13. Provide precast walls at least 6" thick with sufficient reinforcing to permit shipping and placement without damage. Reduce the wall thickness from the outside.

STEPS: Provide steps meeting the requirements of **SCD MH-1.1** where the depth exceeds 6'.

BASINS OVER 12 FEET DEEP: Use precast or cast-in-place concrete; reinforce with #4 bars on 12" centers both vertically and horizontally with 2" clearance from inside wall face.

LOCATION AND ELEVATION: When given on the plans, the location is the center of the grate. The elevation is the lowest point on the grate.

OPENINGS: Obtain the Engineer's approval for any pipe openings greater than 4" from the outside of the pipe to the structure. Fill all voids per CMS 611.

CONCRETE APRONS: Construct aprons in such a manner that the outside edges are at equal elevations.

If specified in the plans, grouted riprap may be used in place of the concrete apron.

DITCH PROTECTION: Provide a 150' length of ditch erosion protection as shown. Installation and payment for ditch erosion protection are per CMS 670.

BASINS IN SAG: When in a sag, omit the earth dike and longitudinal slope of the grate, and provide concrete apron and ditch protection on each side of the basin.

PAYMENT: The concrete apron with cutoff wall or grouted riprap and dike are incidental to **Item 611 - Catch Basins.** However, the apron is not required when **Item 611 - Catch Basins, Without Apron,** is specified.

CATCH BASINS No. 4A, No. 5A, and No. 8A

STATE OF OHIO DEPARTMENT OF TRANSPORTATION

STATE HYDRAULIC ENGINEER

REVISIONS
7-20-01
7-19-02
7-15-05
7-20-12
1-18-13

ROADWAY HYDRAULIC ENGINEER
Matt Cozzoli

OFFICE OF HYDRAULIC ENGINEERING

STANDARD HYDRAULIC CONSTRUCTION DRAWING

CATCH BASINS No's 4A, 5A, 8A

SCD NUMBER
CB-3.4

1/1

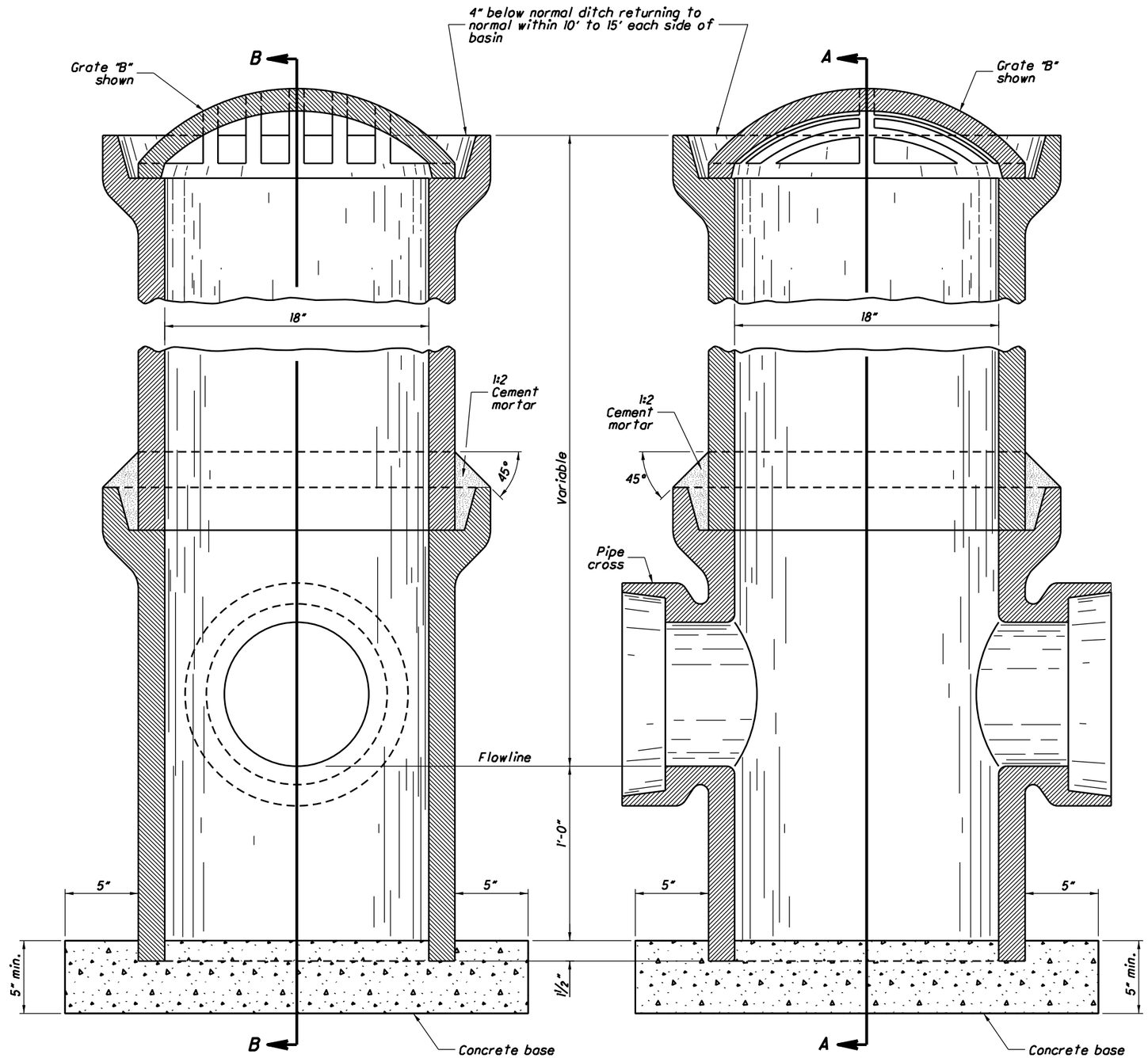

SECTION A-A

SECTION B-B

NOTES

GENERAL: Exercise care to construct the catch basin to the proper grade and in a true vertical position. Do not cut holes inside of pipe.

GRATES: Provide Grate "A" unless the plans specify Grate "B".

Cast the following text into the top of the grate:

"DUMP NO WASTE" and **"DRAINS TO WATERWAY"**

Print text in bold, capital letters at least ½" high. "WATERWAY" may be substituted with "STREAM", "RIVER", "LAKE", etc. Actual placement and logo may vary per manufacturer.

CASTINGS: Meet the requirements of CMS 611. Provide a design essentially the same and equally as strong as the one shown. Minimum weight is 70 lbs. for Grate "A" and 75 lbs. for Grate "B".

Lighter weight grates that meet the requirements of CMS 711.14 may also be provided. Provide grate openings and dimensions as shown here unless otherwise shown in the plans.

PRECAST CONSTRUCTION: Permitted. Meet the concrete requirements of CMS 706.13. Provide sufficient reinforcing to permit shipping and placement without damage.

LOCATION AND ELEVATION: When given on the plans the location is at the center of the grate. The elevation is at the lowest point on the grate.

CONCRETE BASE: Use 4000 psi compressive strength concrete for bases.

CROSS: Where the sewer line is not continuous through a catch basin, plug the upstream opening of the cross properly using a vitrified or concrete stopper and a sealed joint.

RISER AND CROSS: Use standard strength vitrified clay pipe, standard strength non-reinforced concrete pipe having bell and spigot ends, or precast as noted above.

RISER PIPE: Diameter is 18" regardless of size of sewer pipe.

PAYMENT: All materials and labor, including excavation and backfilling, are paid for under **Item 611 - Catch Basin, No. 7.**

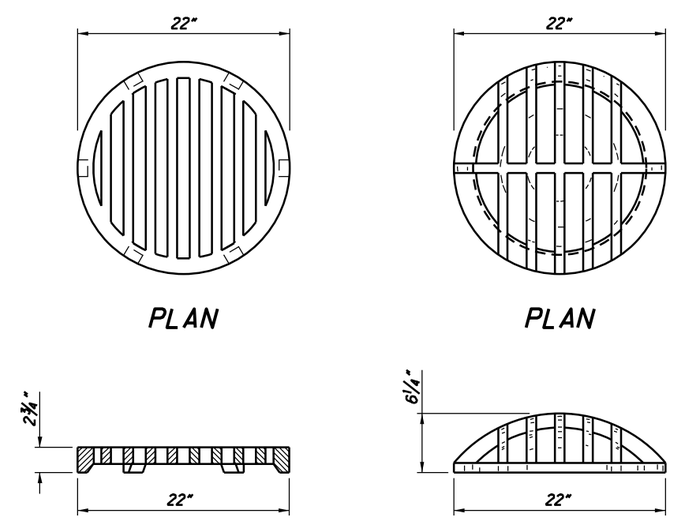

SIDE DITCH CATCH BASIN No. 7

STATE OF OHIO DEPARTMENT OF TRANSPORTATION

STATE HYDRAULIC ENGINEER

REVISIONS
7-20-01
7-19-02
7-20-12
1-18-13

ROADWAY HYDRAULIC ENGINEER
Matt Cozzoli

OFFICE OF HYDRAULIC ENGINEERING

STANDARD HYDRAULIC CONSTRUCTION DRAWING

SIDE DITCH CATCH BASIN No. 7

SCD NUMBER
CB-4.1

1 / 1

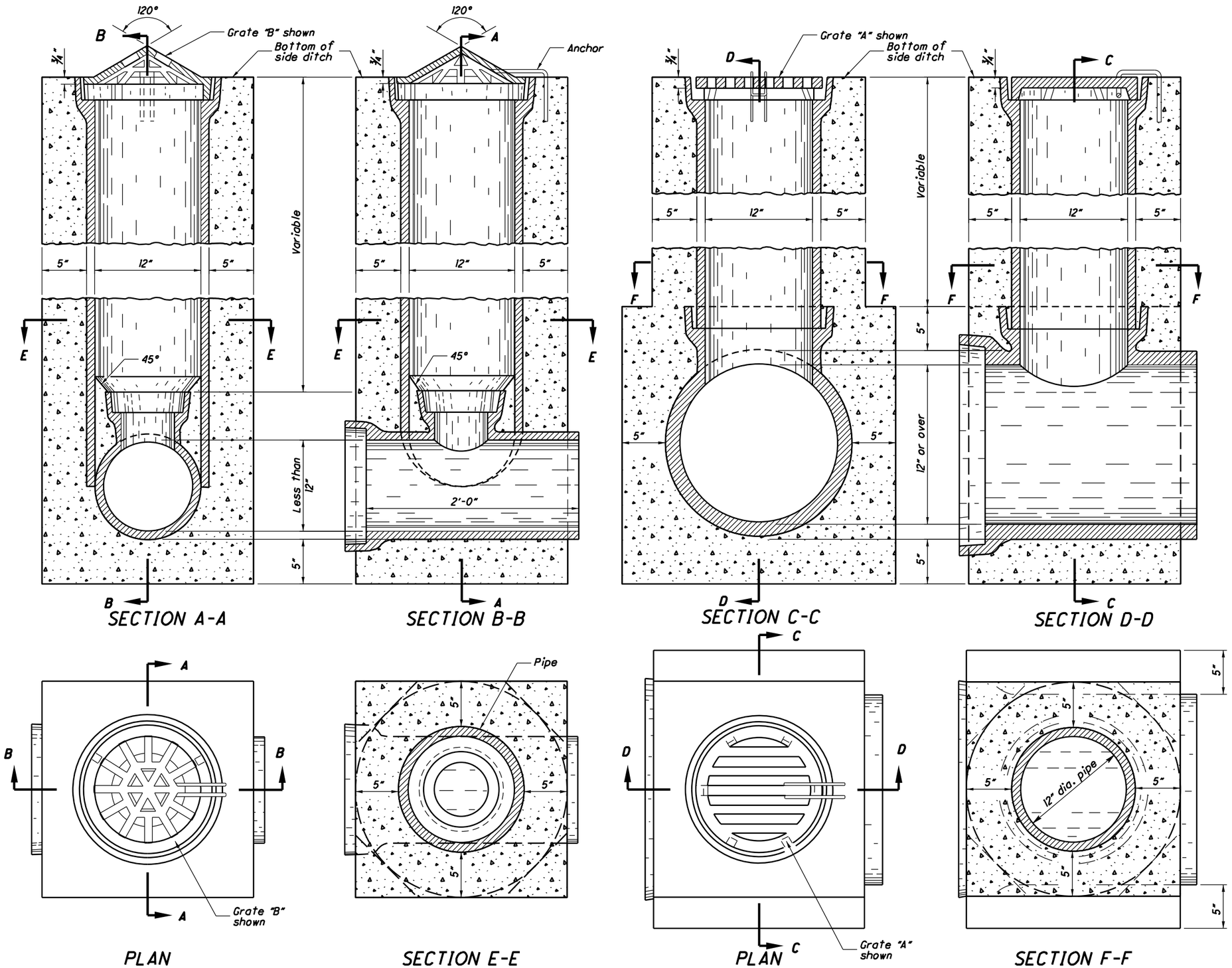

CONSTRUCTED ON PIPE LESS THAN 12" DIAMETER

CONSTRUCTED ON PIPE 12" DIAMETER OR OVER

SIDE DITCH INLETS

NOTES

GRATES: Provide Grate "A" unless the plans specify Grate "B".

Cast the following text into the top of the grate:

"DUMP NO WASTE" and "DRAINS TO WATERWAY"

Print text in bold, capital letters at least 1/2" high. "WATERWAY" may be substituted with "STREAM", "RIVER", "LAKE", etc. Actual placement and logo may vary per manufacturer.

CASTINGS: Meet CMS 611 requirements. Provide a design essentially the same and equally as strong as the one shown.

Minimum weight is:
30 lbs. for Grate "A"
20 lbs. for Grate "B".

Lighter weight grates that meet the requirements of CMS 711.14 may also be provided. Provide grate openings and dimensions as shown here unless otherwise shown in the plans.

CASTING ANCHOR: Anchor is to be a 3/8" radius 2' long, bent around grate as shown and anchored into concrete casing.

PRECAST CONSTRUCTION: Permitted. Meet the concrete requirements of 706.13. Provide sufficient reinforcing to permit shipping and placement without damage.

LOCATION AND ELEVATION: When given on the plans the location is at the center of the grate. The elevation is at the lowest point on the grate.

CONCRETE CASING: Casing for riser may be square, round or hexagonal in shape. Use 4000 psi compressive strength concrete.

RISER PIPE: Riser is 12" in diameter regardless of size of sewer line.

TEE: Where sewer line is not continuous through inlet, plug the upstream opening of the tee properly using a preformed stopper and sealed joint.

RISER AND TEE: Meet the requirements of CMS 611 Type B Pipe Material or furnish precast as noted above.

PAYMENT: All materials and labor, including excavation and backfilling, are paid for under **Item 611 - Inlet, Side Ditch.**

STATE OF OHIO DEPARTMENT OF TRANSPORTATION

STATE HYDRAULIC ENGINEER

REVISIONS
7-20-01
7-19-02
7-20-12
1-18-13

ROADWAY HYDRAULIC ENGINEER
Matt Cozzoli

OFFICE OF HYDRAULIC ENGINEERING

STANDARD HYDRAULIC CONSTRUCTION DRAWING

SIDE DITCH INLETS

SCD NUMBER
CB-4.2

1/1