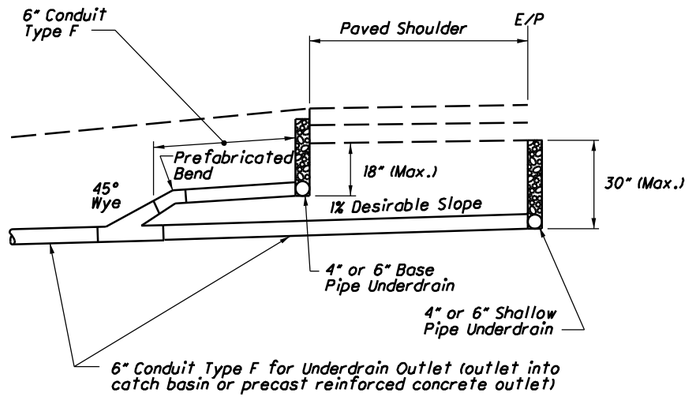


## RIGID OR FLEXIBLE PAVEMENT
**PROFILE**

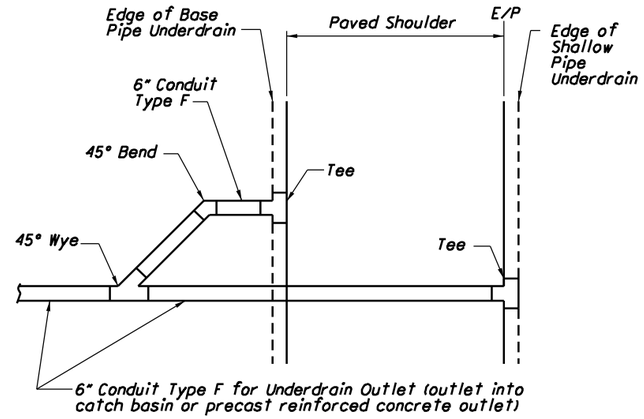


## RIGID OR FLEXIBLE PAVEMENT
**PLAN**

## NOTES

***DESCRIPTION:*** *This item consists of furnishing and installing either a pipe underdrain system or a prefabricated edge underdrain system according to the specifications and with the details on the plans or as directed by the Engineer.*

***MATERIALS:*** *Provide either a pipe underdrain system or a prefabricated edge underdrain system that meets the requirements of CMS 605.*

***BASIS OF PAYMENT FOR PIPE UNDERDRAIN SYSTEM:*** *Work completed, accepted and measured under this item is paid for at the contract unit price bid for* ***Item 605 - ....." Base Pipe Underdrain, Item 605 - ....." Shallow Pipe Underdrain, or Item 605 ....." Deep Pipe Underdrain.*** *The price is full compensation for excavation and backfill; for furnishing materials, including materials for outlet fittings; and for all labor, tools, equipment and incidentals necessary to complete the work.*

***BASIS OF PAYMENT FOR PREFABRICATED EDGE DRAIN SYSTEM:*** *Work completed, accepted and measured under this item is paid for at the contract unit price bid for* ***Item 605 - ....." Prefabricated Edge Underdrains.*** *The price is full compensation for excavation and backfill; for removing and disposing of all surplus excavation according to CMS 105.16 and 105.17; for furnishing materials, including materials for splices, outlet fittings, and Item 301; and for all labor, tools, equipment and incidentals necessary to complete the work associated with the installation of prefabricated edge underdrains.*

*The cost of the 4" Conduit, Type F, and pipe bends and branches needed to connect the existing and proposed underdrains is included with the cost of the 6" Conduit, Type F, for Underdrain Outlets.*

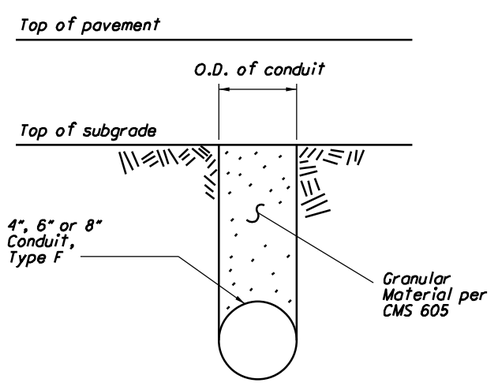


## 611 4", 6", or 8" Conduit, Type F Under Pavement or Base

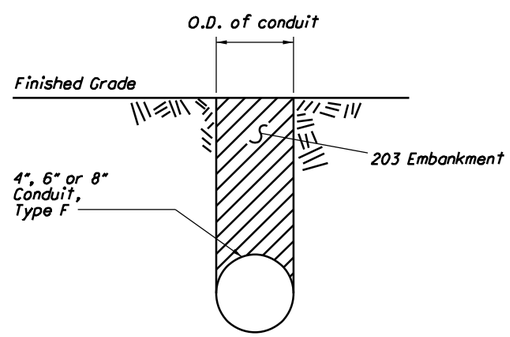


## 611 4", 6", or 8" Conduit, Type F Outside Pavement or Base

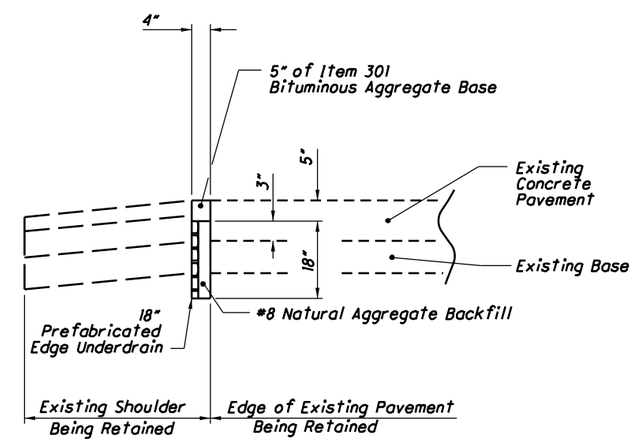


## PREFABRICATED EDGE DRAIN SYSTEM

STATE OF OHIO DEPARTMENT OF TRANSPORTATION

STATE HYDRAULIC ENGINEER

REVISIONS
7-20-01
7-19-02
1-21-05
10-21-05
7-20-12
1-18-13

ROADWAY HYDRAULIC ENGINEER
Matt Cozzoli

OFFICE OF HYDRAULIC ENGINEERING

STANDARD HYDRAULIC CONSTRUCTION DRAWING

PIPE UNDERDRAINS

SCD NUMBER
DM-1.2

1 / 1