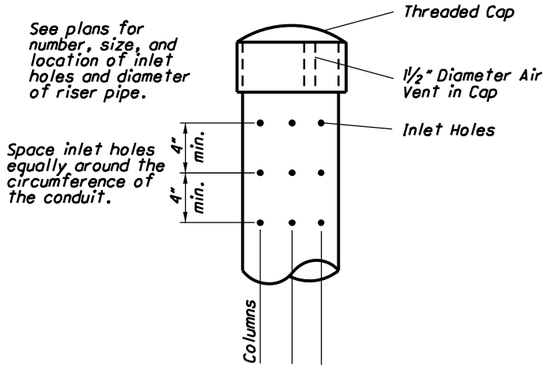

PERFORATED RISER
NOT TO SCALE

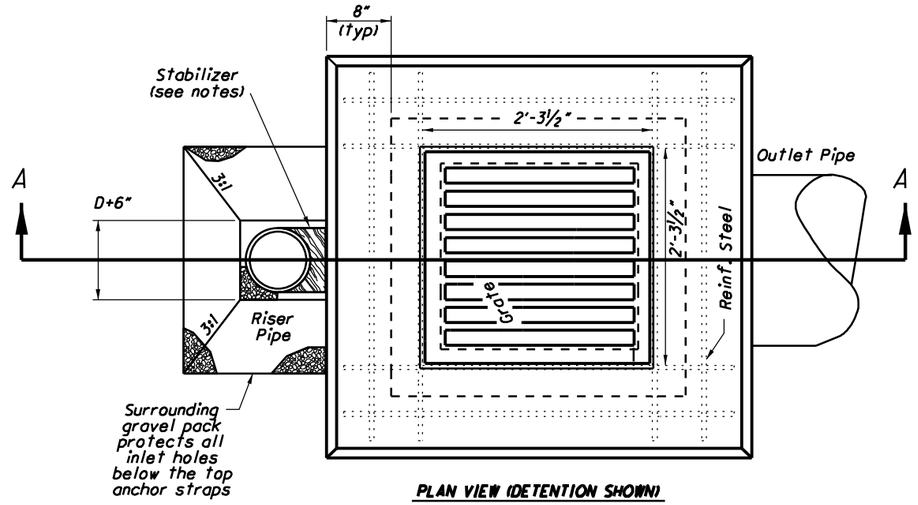

PLAN VIEW (DETENTION SHOWN)
NOT TO SCALE

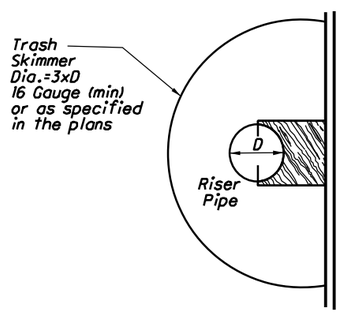

PLAN VIEW (RETENTION SHOWN)
NOT TO SCALE

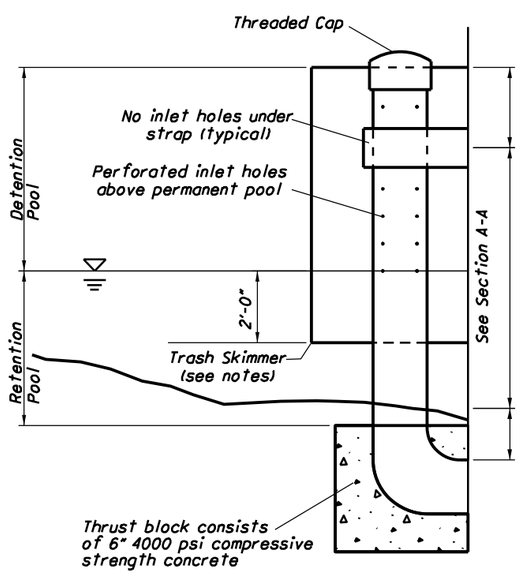

RETENTION RISER PIPE
NOT TO SCALE

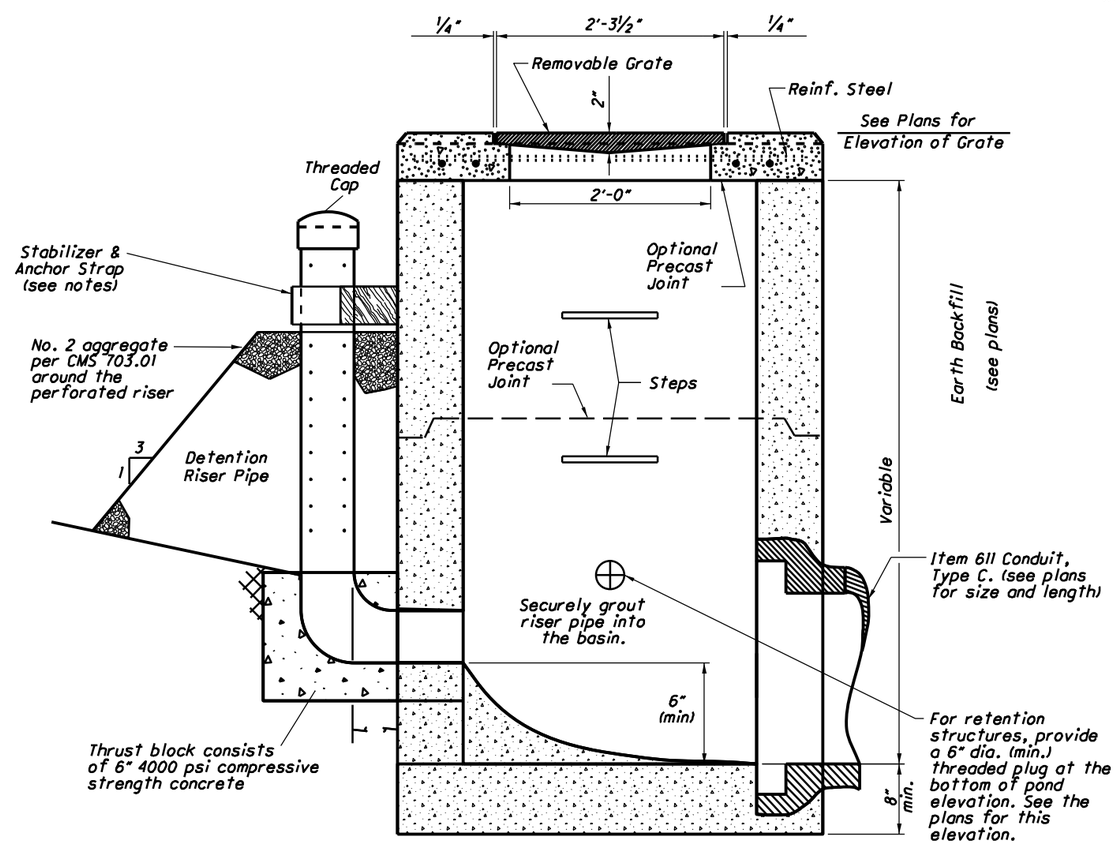

SECTION A-A (DETENTION SHOWN)
NOT TO SCALE

NOTES

LOCATION AND ELEVATION: When given on the plans, the location and the elevation are at the top center of the grate. Place the orifice holes at the elevations as shown on the plans.

BASIN MATERIALS: Provide basin dimensions, materials, and grate per CB-1.2, except as detailed here. Do not use side inlet windows.

Meet **CMS 203.02 H, NATURAL GRANULAR MATERIALS** and specified gradations for all aggregate shown.

RISER PIPE: Use schedule 40 Polyvinyl Chloride Conduit with perforations only as detailed in the plans.

TRASH SKIMMER: Use trash skimmer screens to protect the perforated riser. It must extend from the top of the riser to 2' below the permanent pool level and be open at the top and bottom. The radius of the trash skimmer is 3 times the diameter of the riser pipe or as shown on the plans. Provide stainless steel or galvanized steel trash skimmer per CMS 711.02. Maximum perforation size is 2 inches. Securely fasten trash skimmer to the basin using hardware galvanized per CMS 711.02.

STABILIZER AND ANCHOR STRAP: Securely fasten the riser pipe to the basin in the vertical position using a stabilizer and anchor strap that consists of a universal clamp or a strap and a block. Use only galvanized or stainless steel for metal components. All other materials must be rot resistant.

PAYMENT: All materials and labor, including excavation and backfill, are paid for at the contract price for **Item 611 - Water Quality Basin, Retention (Detention).**

MAXIMUM NUMBER OF PERFORATED COLUMNS

RISER DIAMETER (in.)	HOLE DIAMETER, INCHES			
	¼"	½"	¾"	1"
4	8	8	--	--
6	12	12	9	
8	16	16	12	8
10	20	20	14	10
12	24	24	18	12

STATE OF OHIO DEPARTMENT OF TRANSPORTATION
STATE HYDRAULIC ENGINEER

REVISIONS
4-16-04
7-20-12
1-18-13

ENVIRONMENTAL HYDRAULIC ENGINEER
R. Humphreys

OFFICE OF HYDRAULIC ENGINEERING

STANDARD HYDRAULIC CONSTRUCTION DRAWING
WATER QUALITY BASINS

SCD NUMBER
WQ-1.1

1 / 1

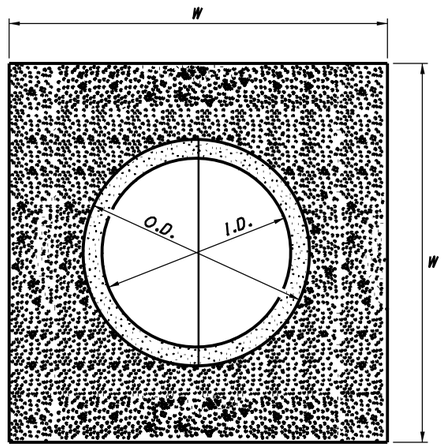

SECTION A-A
(NTS)

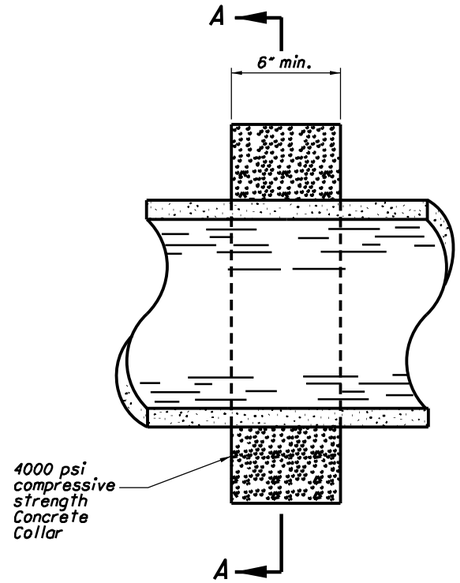

ANTI-SEEP COLLAR
(NTS)

DIAMETER (I.D.) (FT.)	CONCRETE (C.Y.) DIMENSION OF COLLAR W X W (FT.)		
	3X3	4X4	5X5
1	0.15	0.28	0.45
2	N/A	0.24	0.40
3	N/A	N/A	0.33

NOTES

ANTI-SEEP COLLARS: Provide an anti-seep collar as shown in the plans. Payment for the collar is at the contract price for **ITEM 602, CONCRETE MASONRY.**

OBSERVATION WELL: Construct the observation well to a depth and location as shown in the plans. All materials and labor including excavation and backfill are paid for at the contract price for **ITEM 611, OBSERVATION WELL.**

INFILTRATION TRENCH: Construct the infiltration trench to the dimensions shown on the plan. The top 6 inch covering is paid for at the contract price for **ITEM 601, INFILTRATION BASIN AGGREGATE.**

All other materials and labor, including excavation, geotextile fabric, and backfill are paid for at the contract price for **ITEM 203 SPECIAL, INFILTRATION TRENCH.**

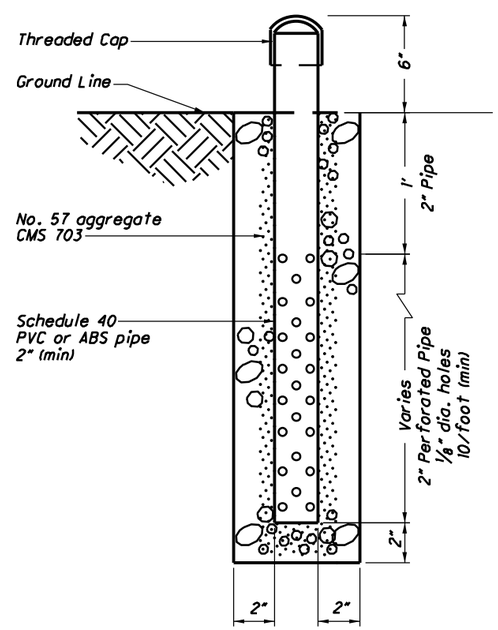

OBSERVATION WELL
NO SCALE

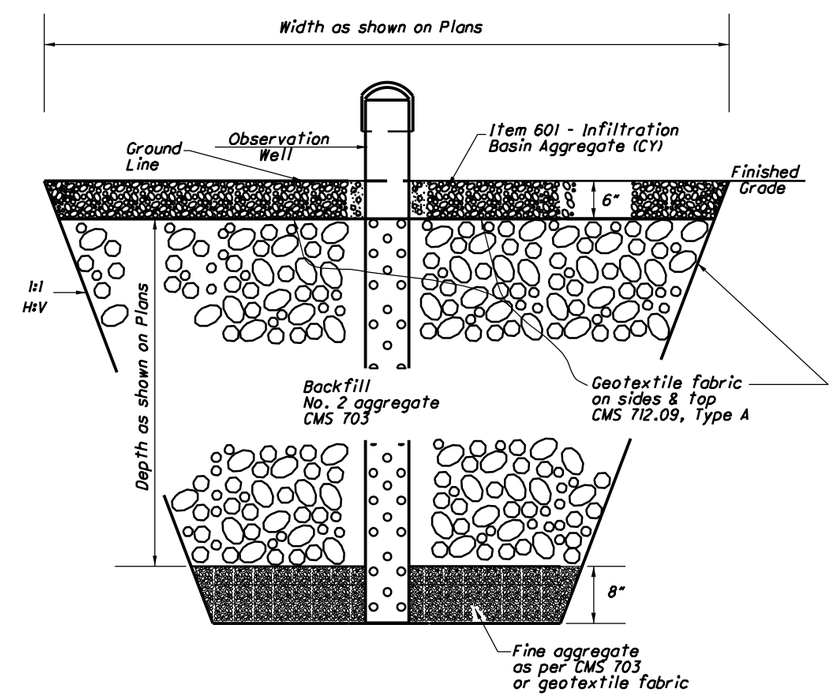

INFILTRATION TRENCH
NO SCALE

STATE OF OHIO DEPARTMENT OF TRANSPORTATION

STATE HYDRAULIC ENGINEER

REVISIONS
1-20-06
4-21-06
10-17-08
7-20-12
1-18-13

ENVIRONMENTAL HYDRAULIC ENGINEER
R. Humphreys

OFFICE OF HYDRAULIC ENGINEERING

STANDARD HYDRAULIC CONSTRUCTION DRAWING
Water Quality - Miscellaneous

SCD NUMBER
WQ-1.2

1 / 1

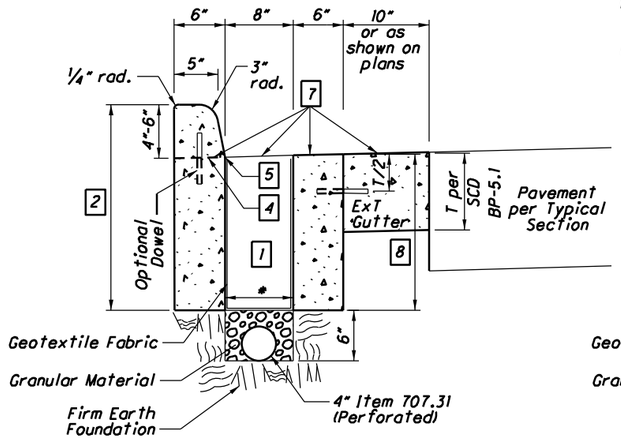

EXFILTRATION TRENCH
TYPE A - Section A-A
Curb and Gutter Application
(NTS)

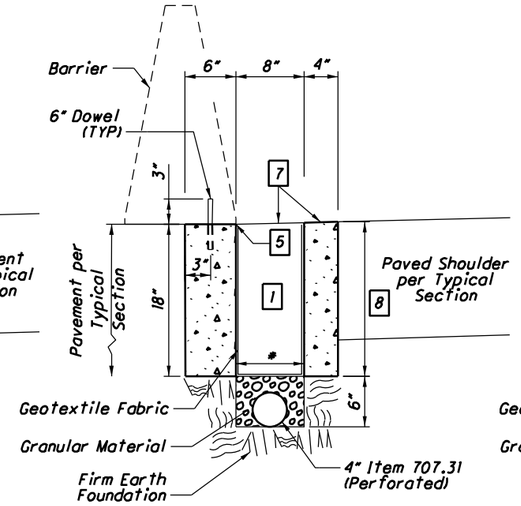

EXFILTRATION TRENCH
TYPE B - Section B-B
Barrier Application
(NTS)

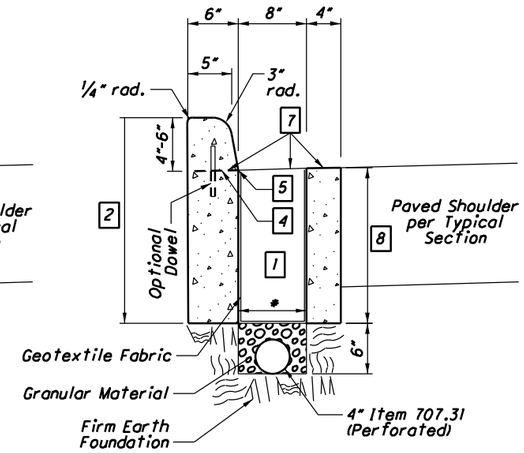

EXFILTRATION TRENCH
TYPE C Section C-C
Various Curb Application
(NTS)

* Bottom dimension may be reduced by up to ½" to assist in form removal during construction

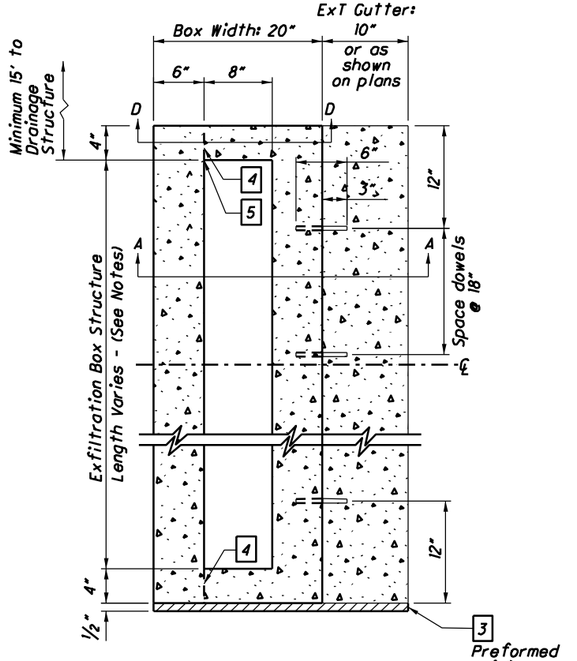

EXFILTRATION TRENCH
TYPE A
Plan View
(NTS)

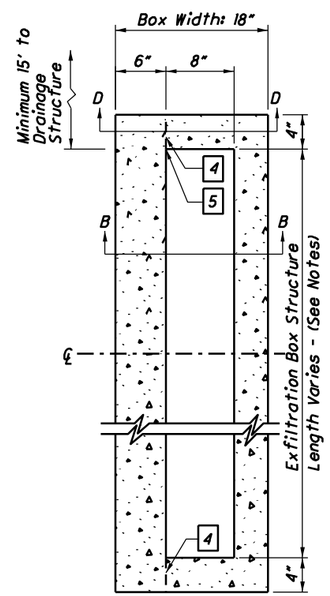

EXFILTRATION TRENCH
TYPE B
Plan View
(NTS)

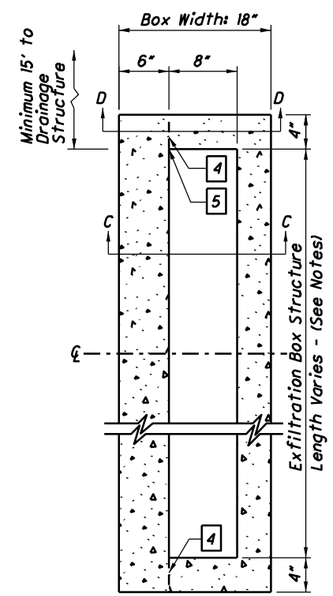

EXFILTRATION TRENCH
TYPE C
Plan View
(NTS)

NOTES

EXFILTRATION TRENCH (ExT): *Locate the exfiltration box structure as shown on the plans.*

The exfiltration box structure may be precast, cast in the field or a combination of precast and cast in the field. The minimum length of a precast exfiltration box structure is 4'. More than 1 precast section may be provided to meet the required length shown in the plans.

Provide concrete conforming to CMS 511 for exfiltration trench base.

If the exfiltration box structure is precast, furnish reinforcing steel conforming to CMS 509.02 and CMS 709.00 for the precast structure in a sufficient amount to permit shipping and placement without damage. Locate all lifting devices on the exterior side walls of the precast structure.

Maintain the cross slope of the pavement as shown on the Standard Construction Drawing or as shown on the plans. Additional variations in dimensions from the Standard Construction Drawing for precast exfiltration box structures may occur. Variances for precast structure dimensions must be approved by the Office of Hydraulics.

Furnish 6" epoxy coated #4 reinforcing bars, conforming to CMS 509.02 and 709.00, to be used as dowels to connect proposed barrier or field cast curb to the top of the precast exfiltration box structure and to connect ExT gutter and exfiltration box structure. Space dowels for curb every 12" on center for the length of the exfiltration box structure. Space dowels for ExT gutter 12" from the ends of the ExT base and every 18" on center for the length of the exfiltration box structure. When dowels are required, drill in place or precast the dowel opening. If dowel openings are drilled, fill with epoxy when placing the dowel. Furnish galvanized inserts for dowels.

Provide concrete conforming to CMS 609 for 12" exfiltration trench gutter for Exfiltration Trench Type A. Cost for the concrete is included in the price of Item 835 - Exfiltration Trench, Type A. Costs for the 4" perforated conduit (Item 707.31), filter media, and exfiltration trench box structure are included in the price of Item 835 - Exfiltration Trench, Type ___. Cost for the curb for ExT, Types A and C is included in the price of Item 835 - Exfiltration Trench, Type ___. Cost for Barrier for ExT, Type B is included with the Barrier.

All materials and labor, including excavation and backfill are paid for at the contract price for ***ITEM 835 - EXFILTRATION TRENCH, TYPE ___.***

1. *Exfiltration Trench Filter Media (See SS835) - Maintain free from debris and sediment laden runoff throughout construction of the project.*
2. *22" for 4" Curb and Gutter and 24" for 6" Curb and Gutter.*
3. *Furnish preformed expansion joint material according to 705.03 when abutting concrete.*
4. *Optional Construction Joint w/ dowels.*
5. *Location for Station and Offset. Elevation according to Typical Section.*
6. *If curb portion is to be cast in field, furnish dowels for the curb as shown for Type A and C. For 4" and 6" curb height, extend the dowels 2" and 3", respectively, above the exfiltration trench base.*
7. *Match the cross slope of the top of the ExT walls, the top of the filter media, and the ExT gutter (if applicable) with the the proposed cross slope of the adjacent pavement or gutter cross slope.*
8. *Determine the front wall dimension of the ExT by using the dimensions at the outside edge of the back wall and the cross slope from 7.*

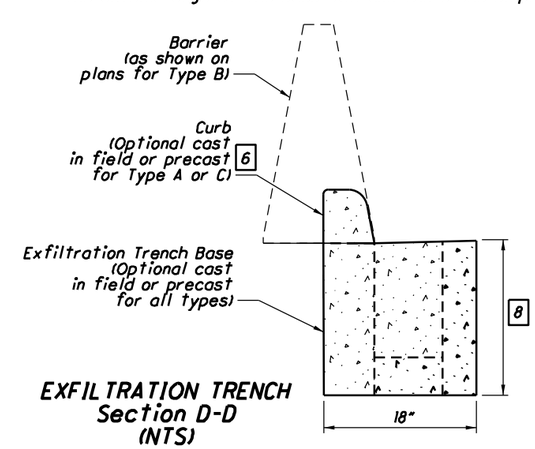

EXFILTRATION TRENCH
Section D-D
(NTS)

STATE OF OHIO DEPARTMENT OF TRANSPORTATION

STATE HYDRAULIC ENGINEER

REVISIONS
1/20/06
4/21/06
10/17/08
7/20/12

ENVIRONMENTAL HYDRAULIC ENGINEER
R. Humphreys

OFFICE OF HYDRAULIC ENGINEERING

STANDARD HYDRAULIC CONSTRUCTION DRAWING
WATER QUALITY - EXFILTRATION TRENCH

SCD NUMBER
WQ-1.3

1 / 1