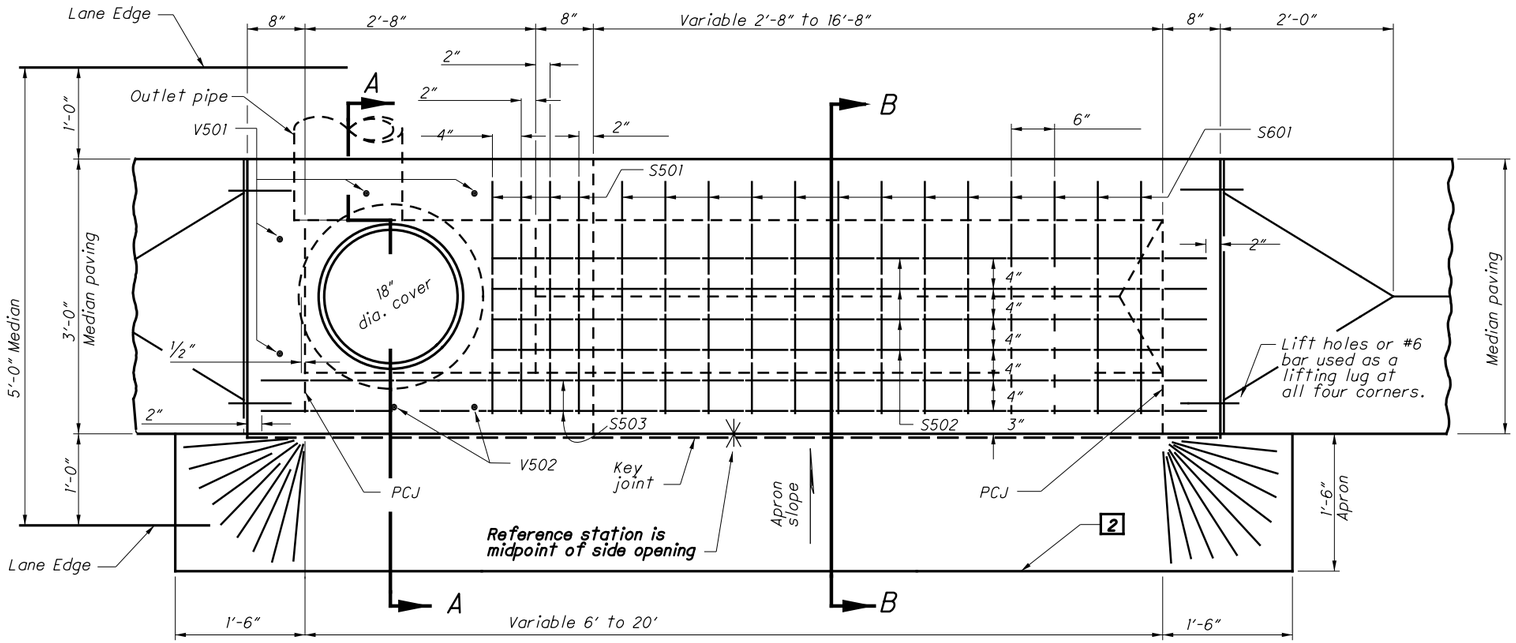


PLAN VIEW

See Sheet 2 of 2 for Sections

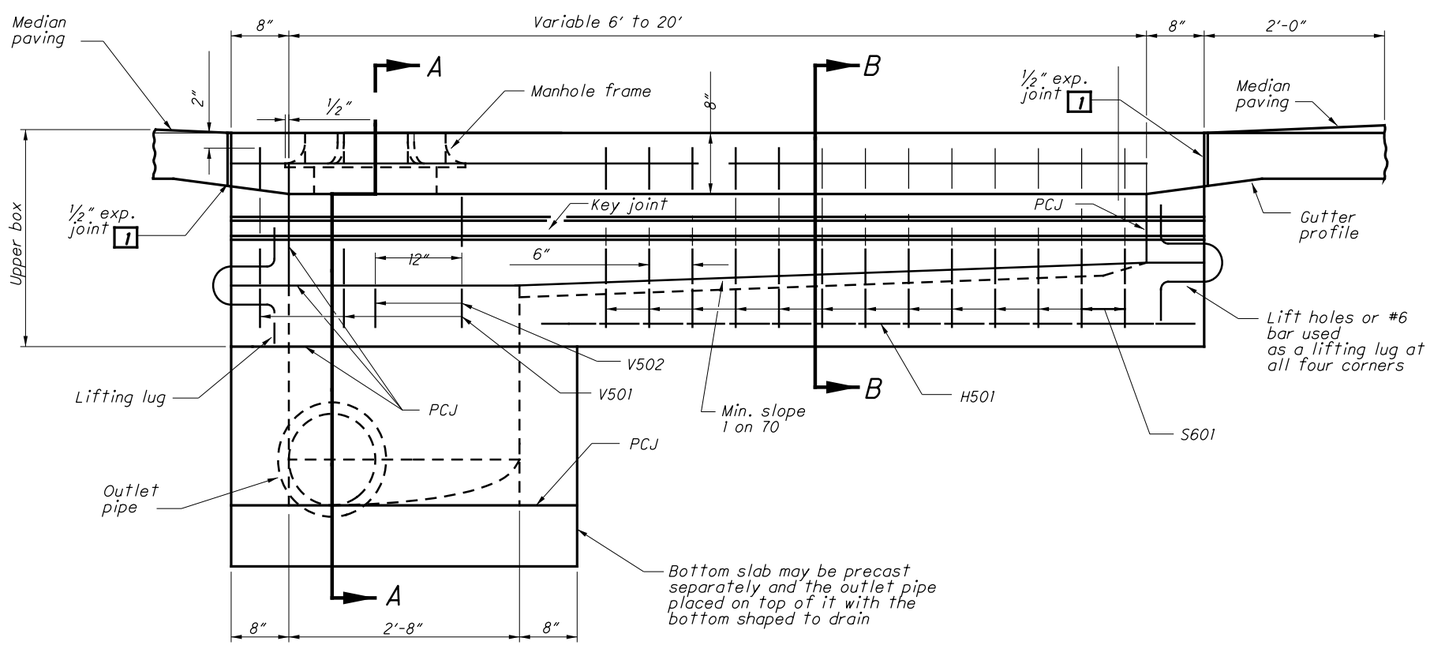


FRONT ELEVATION

MEDIAN INLETS (6' to 20')

## NOTES

**CASTINGS:** Provide a design essentially the same and equally as strong and heavy as those shown, or meet the requirements of CMS 711.14.

Fit and finish the bearing areas of frame and cover to provide a firm and even seat for the entire cover in the frame. Ensure there are no projections on bearing areas of either casting, and the cover seats in its frame without rocking.

Minimum weight of frame and cover: 130 lbs.

**SUMP WALLS:** The walls between the upper box and bottom slab may be brick, concrete block, cast-in-place or precast concrete construction. Precast walls shall have a minimum thickness of 6" and shall be reinforced sufficiently to permit shipping and handling without damage.

**DEPRESSED APRON:** The 18" depressed apron shall be an integral part of concrete pavements, with the hand finishing required for the 2" depression being performed before the initial set. When the inlets are used with flexible pavements, the depressed apron shall be of 9" thick 4000 psi compressive strength concrete. Payment for all labor and material required to construct the depressed apron shall be included in the cost of the inlet. The subgrade shall be adjusted to receive the depressed apron.

**CONCRETE:** Provide 4000 psi compressive strength concrete when cast-in-place. When precast, provide concrete that meets the requirements of CMS 706.13. Mark the inlet number on the structure. Seal the exposed concrete surfaces of the inlet per item 512 when specified in the plans.

**REINFORCING STEEL:** Provide epoxy coated reinforcing steel in accordance with CMS 509.09.

**QUANTITIES:** Deduct the quantity of median pavement within the limits of the inlet from the project quantities.

**SIDE OPENING:** Details shown for the right side of the inlet also apply to the left side openings where needed for drainage of the left median shoulder as shown in the plans. Locate the sump at the downgrade end of the inlet for both right and left side openings.

**OPENINGS:** All pipe openings are the outside diameter of the pipe being supplied plus 2" when fabricated or field cut. Fill any voids per CMS 601.

**UPPER BOX:** May be precast, or cast-in-place. If precast, set it in a bed of mortar at the sump walls and a bed of compacted sand at all other points. Provide reinforcing steel for precast upper boxes equivalent to the design shown. Construction joints other than those shown are permitted in the endwalls to facilitate the removal of precasting forms. The interior trough may have a flat bottom.

**PCJ:** Permissible Construction Joint.

## LEGEND

1 Provide a 1" minimum expansion joint in concrete pavements or concrete shoulders.

2 Butt joint when used in flexible pavement.

STATE OF OHIO DEPARTMENT OF TRANSPORTATION

STATE HYDRAULIC ENGINEER

REVISIONS
7-20-01
7-19-02
7-15-05
7-20-12
1-18-13

ROADWAY HYDRAULIC ENGINEER
Matt Cozzoli

OFFICE OF HYDRAULIC ENGINEERING

STANDARD HYDRAULIC CONSTRUCTION DRAWING

MEDIAN INLET NO. 2

SCD NUMBER
I-1.1

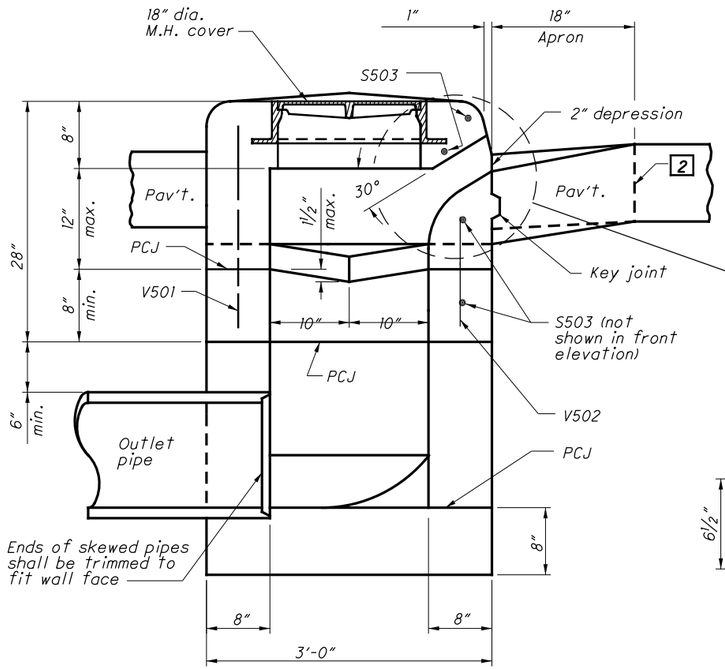


SECTION A-A
(See Sht. 1/2.)

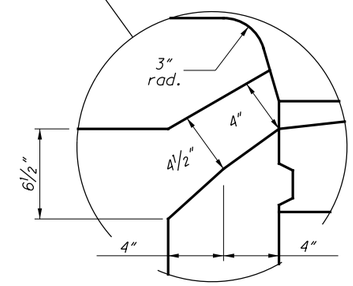


ALTERNATE OPENING

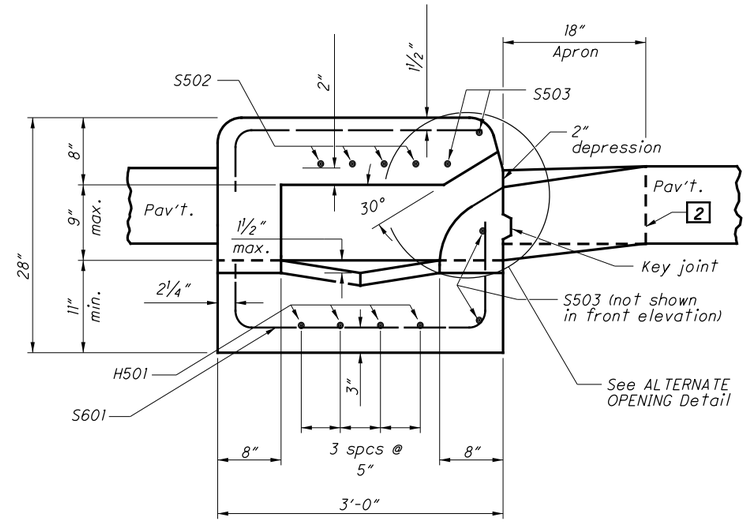


SECTION B-B
(See Sht. 1/2)

See Sheet 1 of 2 for NOTES and LEGEND

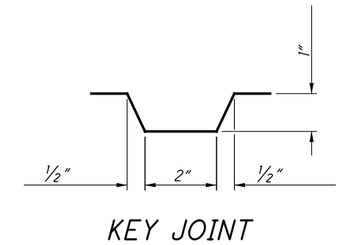


KEY JOINT

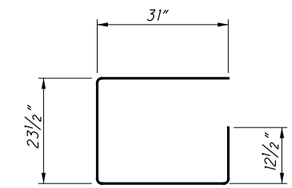


S601

#6 ROUND BAR
BENDING DIAGRAM

## CONCRETE AND REINFORCING QUANTITIES (English)

| INLET LENGTH | CONCRETE | REINFORCING | | | | | | | | | | | | | | Weight |
|---|---|---|---|---|---|---|---|---|---|---|---|---|---|---|---|---|
| | | S601 #6 bar | | S501 #5 bar | | S502 #5 bar | | S503 #5 bar | | H501 #5 bar | | V501 #5 bar | | V502 #5 bar | | |
| | (cubic yards) | No. | Length | No. | Length | No. | Length | No. | Length | No. | Length | No. | Length | No. | Length | (lbs.) |
| 6' | 2.2 | 5 | 8'-2" | 4 | 2'-7" | 4 | 4'-4" | 4 | 7'-0" | 4 | 3'-8" | 4 | 2'-0" | 2 | 1'-0" | 145 |
| 8' | 2.6 | 9 | 8'-2" | 4 | 2'-7" | 4 | 6'-4" | 4 | 9'-0" | 4 | 5'-8" | 4 | 2'-0" | 2 | 1'-0" | 219 |
| 10' | 3.0 | 13 | 8'-2" | 4 | 2'-7" | 4 | 8'-4" | 4 | 11'-0" | 4 | 7'-8" | 4 | 2'-0" | 2 | 1'-0" | 293 |
| 12' | 3.4 | 17 | 8'-2" | 4 | 2'-7" | 4 | 10'-4" | 4 | 13'-0" | 4 | 9'-8" | 4 | 2'-0" | 2 | 1'-0" | 367 |
| 14' | 3.8 | 21 | 8'-2" | 4 | 2'-7" | 4 | 12'-4" | 4 | 15'-0" | 4 | 11'-8" | 4 | 2'-0" | 2 | 1'-0" | 442 |
| 16' | 4.2 | 25 | 8'-2" | 4 | 2'-7" | 4 | 14'-4" | 4 | 17'-0" | 4 | 13'-8" | 4 | 2'-0" | 2 | 1'-0" | 516 |
| 18' | 4.6 | 29 | 8'-2" | 4 | 2'-7" | 4 | 16'-4" | 4 | 19'-0" | 4 | 15'-8" | 4 | 2'-0" | 2 | 1'-0" | 590 |
| 20' | 5.0 | 33 | 8'-2" | 4 | 2'-7" | 4 | 18'-4" | 4 | 21'-0" | 4 | 17'-8" | 4 | 2'-0" | 2 | 1'-0" | 664 |

Note:
The above table of quantities is included with this drawing for estimating purposes only. Include the cost of furnishing and placing all concrete, reinforcing steel, casting, etc., in Item 611 for payment. All straight bars are #5.

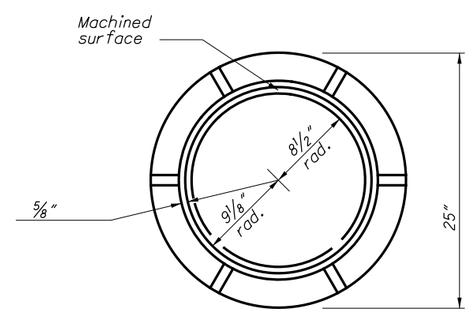


PLAN OF FRAME

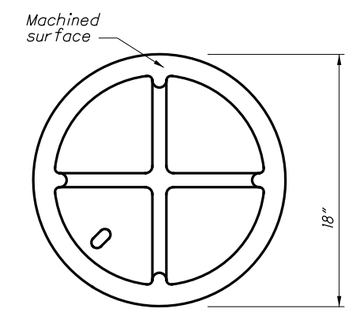


BOTTOM PLAN OF COVER

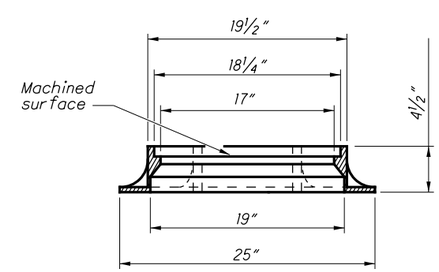


FRAME SECTION
MANHOLE FRAME

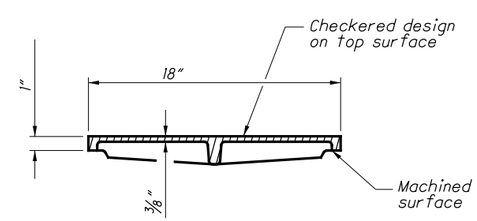


COVER SECTION
MANHOLE COVER

STATE OF OHIO DEPARTMENT OF TRANSPORTATION
STATE HYDRAULIC ENGINEER

REVISIONS
7-20-01
7-19-02
7-15-05
7-20-12
1-18-13

ROADWAY HYDRAULIC ENGINEER
Matt Cozzoli

OFFICE OF HYDRAULIC ENGINEERING

STANDARD HYDRAULIC CONSTRUCTION DRAWING
MEDIAN INLET No. 2

SCD NUMBER
I-1.1

2 / 2

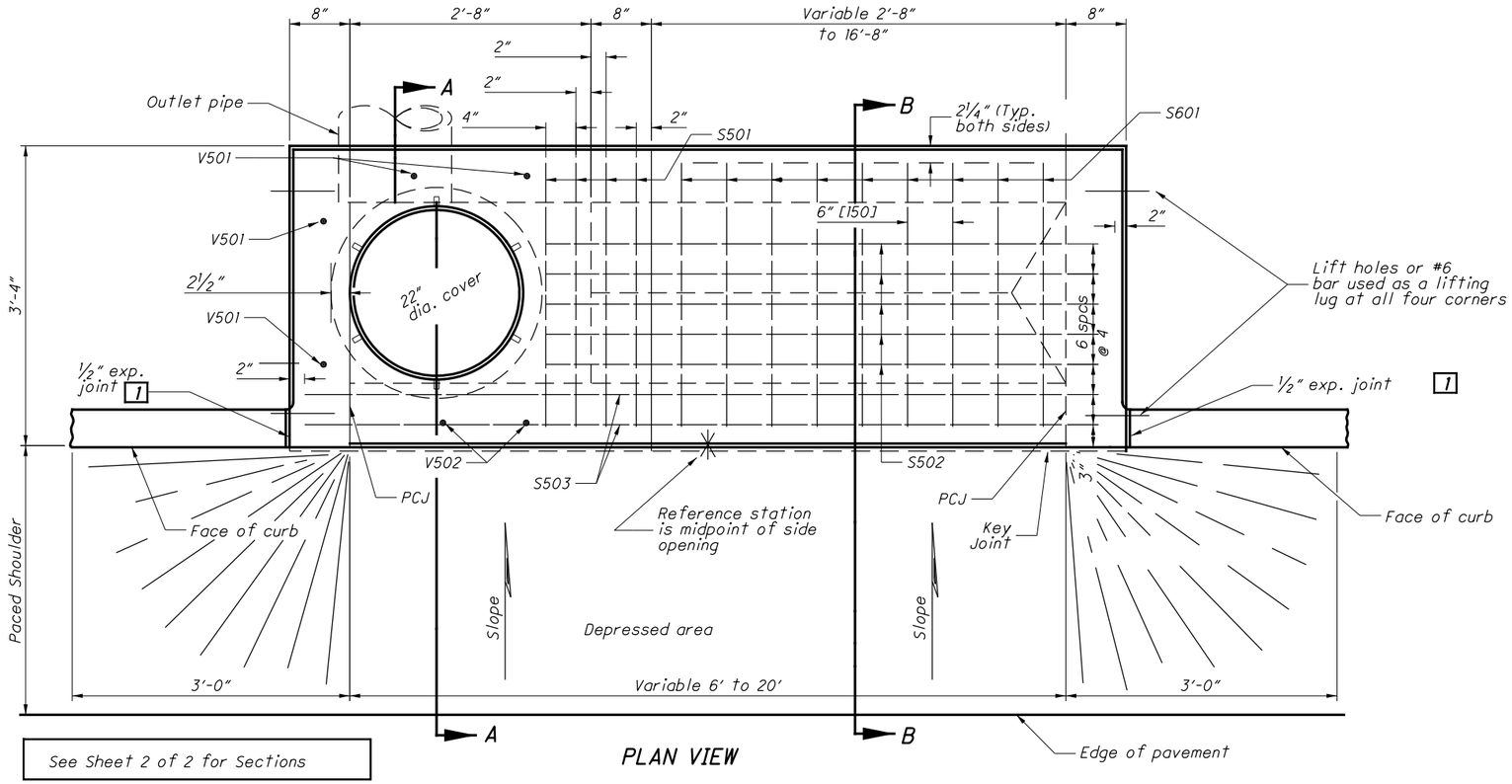


PLAN VIEW

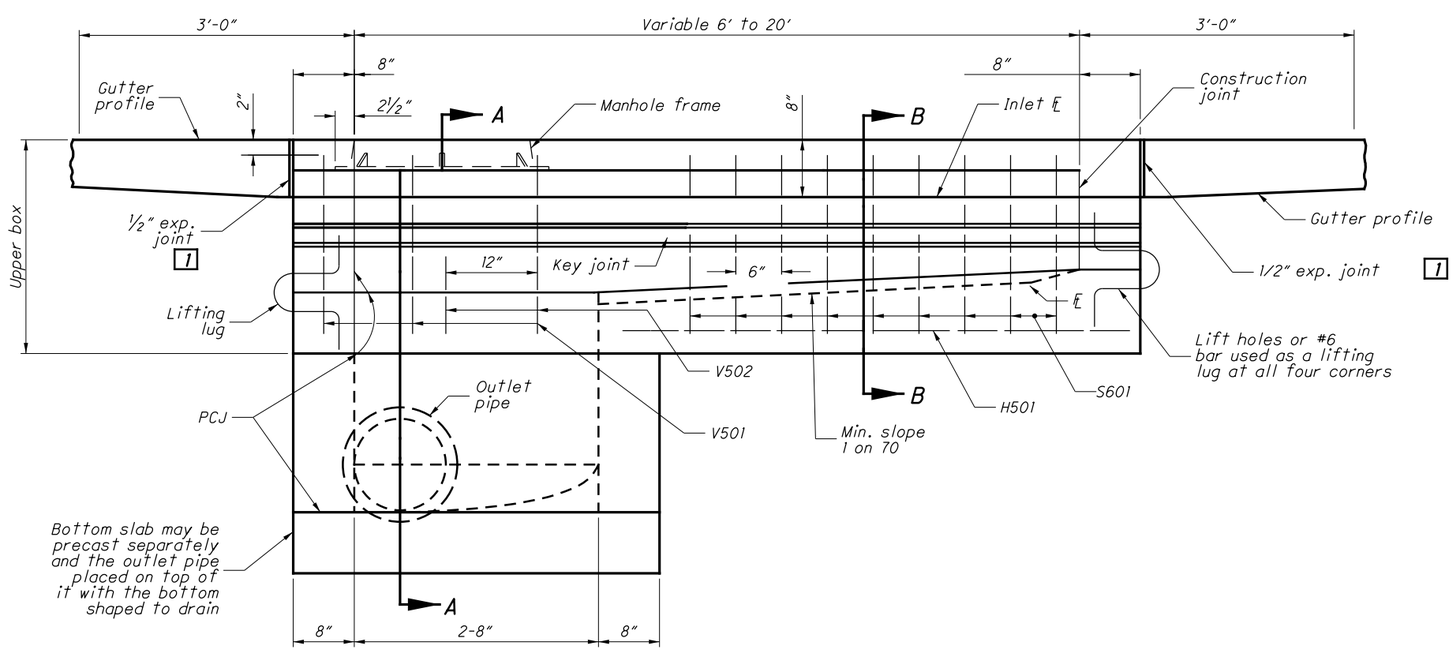


FRONT ELEVATION

# PAVEMENT INLETS (6' to 20')

## NOTES

**CASTINGS:** Provide a design essentially the same and equally as strong and heavy as those shown, or meet the requirements at CMS 711.14

Fit and finish the bearing areas of the frame and cover to provide a firm and even seat for the entire cover in the frame. Ensure there are no projections on the bearing areas of either casting and the cover seats in its frame without rocking.

Minimum weight of frame and cover: 195 lbs.

**SUMP WALLS:** Walls between the upper box and bottom slab may be brick, concrete block, cast-in-place or precast concrete construction. The minimum thickness of precast walls is 6". Sufficiently reinforce precast walls to permit shipping and handling without damage.

**CONCRETE:** Provide 4000 psi compressive strength concrete when cast-in-place. Provide pre-cast concrete that meets the requirements of CMS 706.13. Mark the inlet number on the structure. Seal all exposed concrete surfaces of the inlet per item 512 when specified in the plans.

**REINFORCING STEEL:** Provide epoxy coated reinforcing steel in accordance with CMS 509.09.

**QUANTITIES:** Deduct the curb quantities within the limits of the inlet from the project quantities.

**SIDE OPENING:** Details shown for the right side of the inlet also apply to left side openings where needed for drainage of the opposite outside shoulder as shown in the plans. Locate the sump at the downgrade end of the inlet for both right and left side openings.

**OPENINGS:** Pipe openings are the outside diameter of the pipe being supplied plus 2" when fabricated or field cut. Fill any voids per CMS 601.

**UPPER BOX:** May be precast, or cast-in-place. If precast, set it in a bed of mortar at the sump walls and in a bed of compacted sand at all other points. Provide reinforcing steel for precast upper boxes that is equivalent to the design shown. Construction joints other than those shown are permitted in the endwalls to facilitate the removal of precasting forms. The interior trough may have a flat bottom.

**PCJ:** Permissible Construction Joint

## LEGEND

1 Provide a 1" minimum expansion joint in concrete pavement or concrete shoulders.

2 In lieu of the depressed shoulder shown here, provide a concrete apron as shown on SCD I-1.1 when the inlet is placed at the edge of pavement.

STATE OF OHIO DEPARTMENT OF TRANSPORTATION

STATE HYDRAULIC ENGINEER

REVISIONS
7-20-01
7-19-02
7-15-05
7-20-12
1-18-13

ROADWAY HYDRAULIC ENGINEER
Matt Cozzoli

OFFICE OF HYDRAULIC ENGINEERING

STANDARD HYDRAULIC CONSTRUCTION DRAWING

PAVEMENT INLET No. 2A

SCD NUMBER
I-1.2

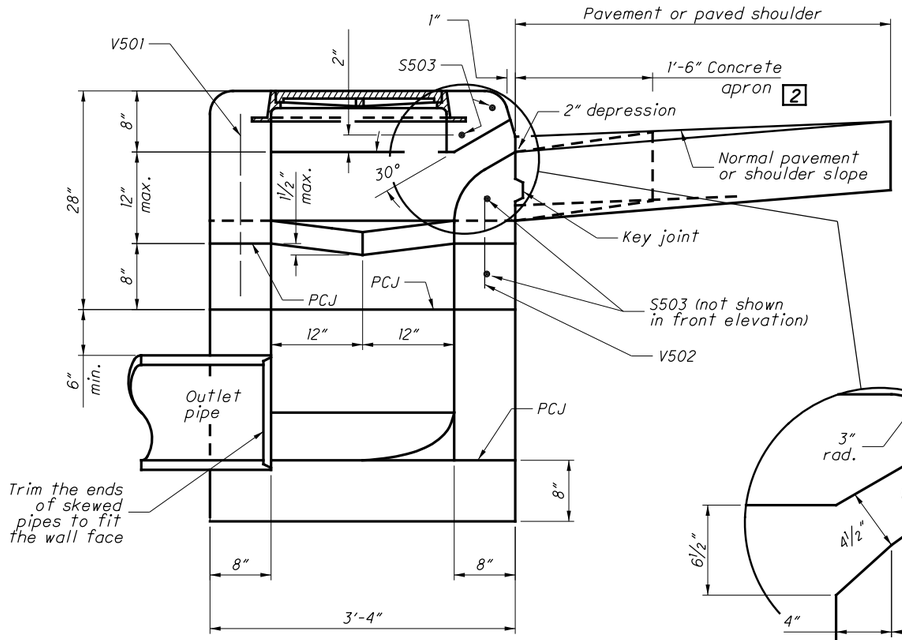


SECTION A-A
(See Sht. 1/2)

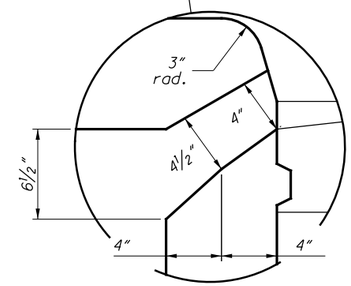


ALTERNATE OPENING

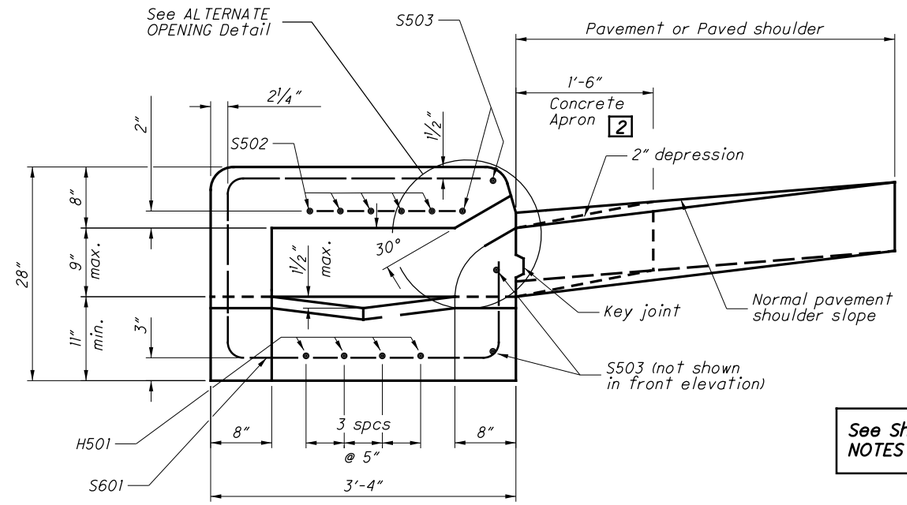


SECTION B-B
(See Sht. 1/2)

See Sheet 1 of 2 for NOTES and LEGEND

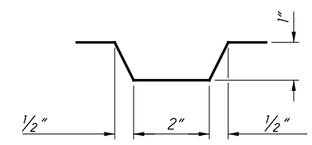


KEY JOINT

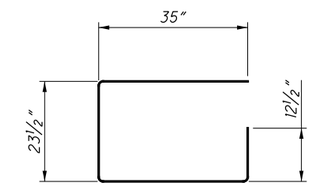


S601
#6 ROUND BAR
BENDING DIAGRAM

| CONCRETE AND REINFORCING QUANTITIES (English) | | | | | | | | | | | | | | | | |
|---|---|---|---|---|---|---|---|---|---|---|---|---|---|---|---|---|
| INLET LENGTH | CONCRETE | Reinforcing | | | | | | | | | | | | | | Weight |
| | | S601 #6 bar | | S501 #5 bar | | S502 #5 bar | | S503 #5 bar | | H501 #5 bar | | V501 #5 bar | | V502 #5 bar | | |
| | (cu. yds.) | No. | Length | No. | Length | No. | Length | No. | Length | No. | Length | No. | Length | No. | Length | (lbs.) |
| 6' | 2.4 | 5 | 8'-10" | 4 | 2'-11" | 5 | 4'-4" | 4 | 7'-0" | 4 | 3'-8" | 4 | 2'-0" | 2 | 1'-0" | 156 |
| 8' | 2.8 | 9 | 8'-10" | 4 | 2'-11" | 5 | 6'-4" | 4 | 9'-0" | 4 | 5'-8" | 4 | 2'-0" | 2 | 1'-0" | 236 |
| 10' | 3.2 | 13 | 8'-10" | 4 | 2'-11" | 5 | 8'-4" | 4 | 11'-0" | 4 | 7'-8" | 4 | 2'-0" | 2 | 1'-0" | 316 |
| 12' | 3.6 | 17 | 8'-10" | 4 | 2'-11" | 5 | 10'-4" | 4 | 13'-0" | 4 | 9'-8" | 4 | 2'-0" | 2 | 1'-0" | 397 |
| 14' | 3.8 | 21 | 8'-10" | 4 | 2'-11" | 5 | 12'-4" | 4 | 15'-0" | 4 | 11'-8" | 4 | 2'-0" | 2 | 1'-0" | 477 |
| 16' | 4.4 | 25 | 8'-10" | 4 | 2'-11" | 5 | 14'-4" | 4 | 17'-0" | 4 | 13'-8" | 4 | 2'-0" | 2 | 1'-0" | 557 |
| 18' | 4.8 | 29 | 8'-10" | 4 | 2'-11" | 5 | 16'-4" | 4 | 19'-0" | 4 | 15'-8" | 4 | 2'-0" | 2 | 1'-0" | 636 |
| 20' | 5.2 | 33 | 8'-10" | 4 | 2'-11" | 5 | 18'-4" | 4 | 21'-0" | 4 | 17'-8" | 4 | 2'-0" | 2 | 1'-0" | 717 |

Note: The above table of quantities is included with this drawing for estimating purposes only. Include the cost of furnishing and placing all concrete, reinforcing steel, casting, etc., in Item 611 for payment. All straight bars are #5.

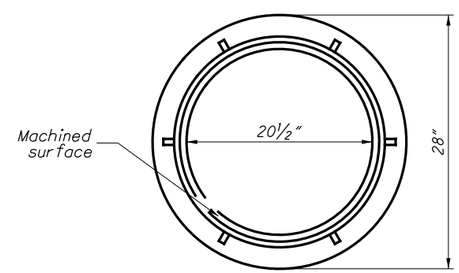


PLAN OF FRAME

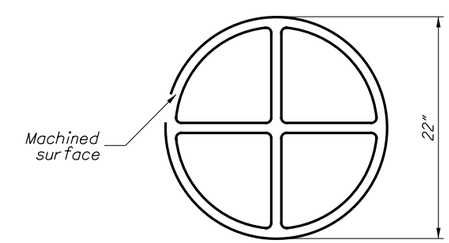


BOTTOM PLAN OF COVER

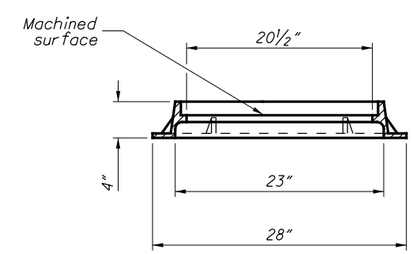


FRAME SECTION
MANHOLE FRAME

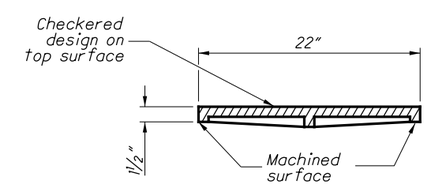


COVER SECTION
MANHOLE COVER

STATE OF OHIO DEPARTMENT OF TRANSPORTATION

STATE HYDRAULIC ENGINEER

REVISIONS
7-20-01
7-19-02
7-15-05
7-20-12
1-18-13

ROADWAY HYDRAULIC ENGINEER
Matt Cozzoli

OFFICE OF HYDRAULIC ENGINEERING

STANDARD HYDRAULIC CONSTRUCTION DRAWING

PAVEMENT INLET No. 2A

SCD NUMBER
I-1.2

2/2

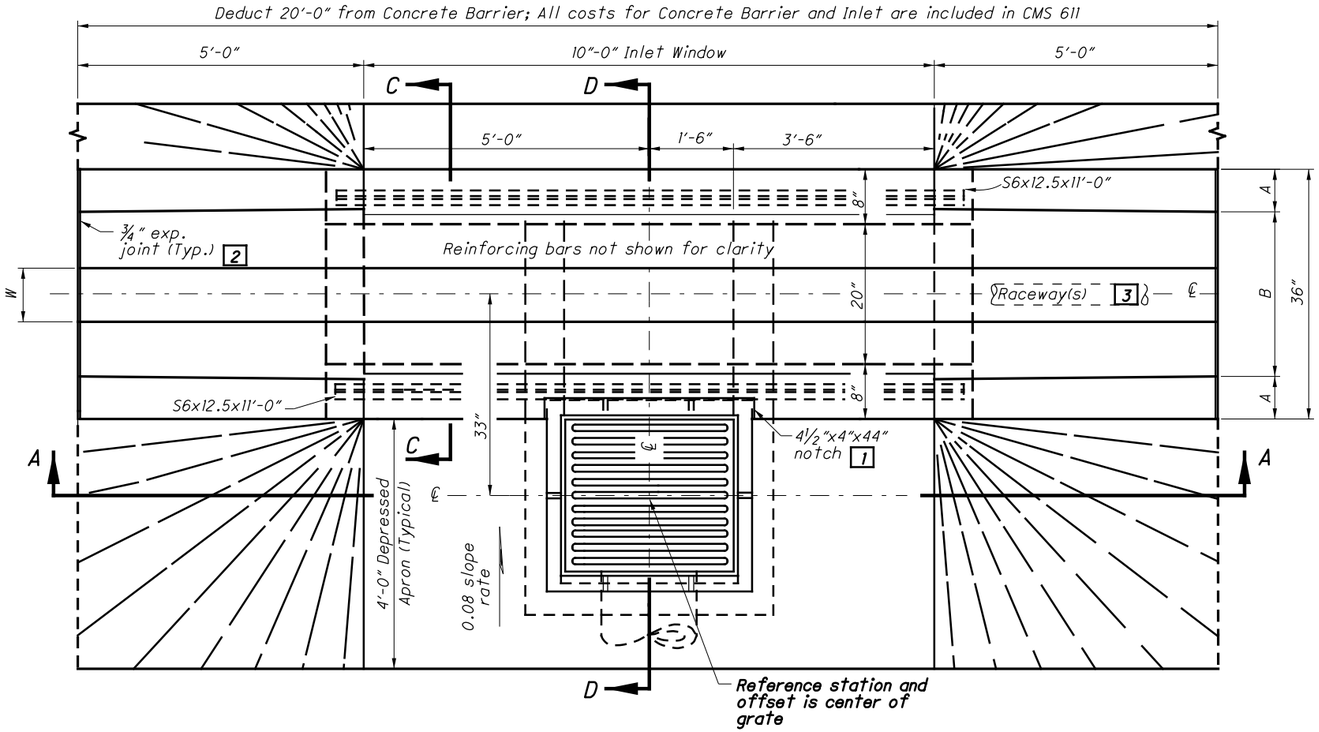


PLAN VIEW

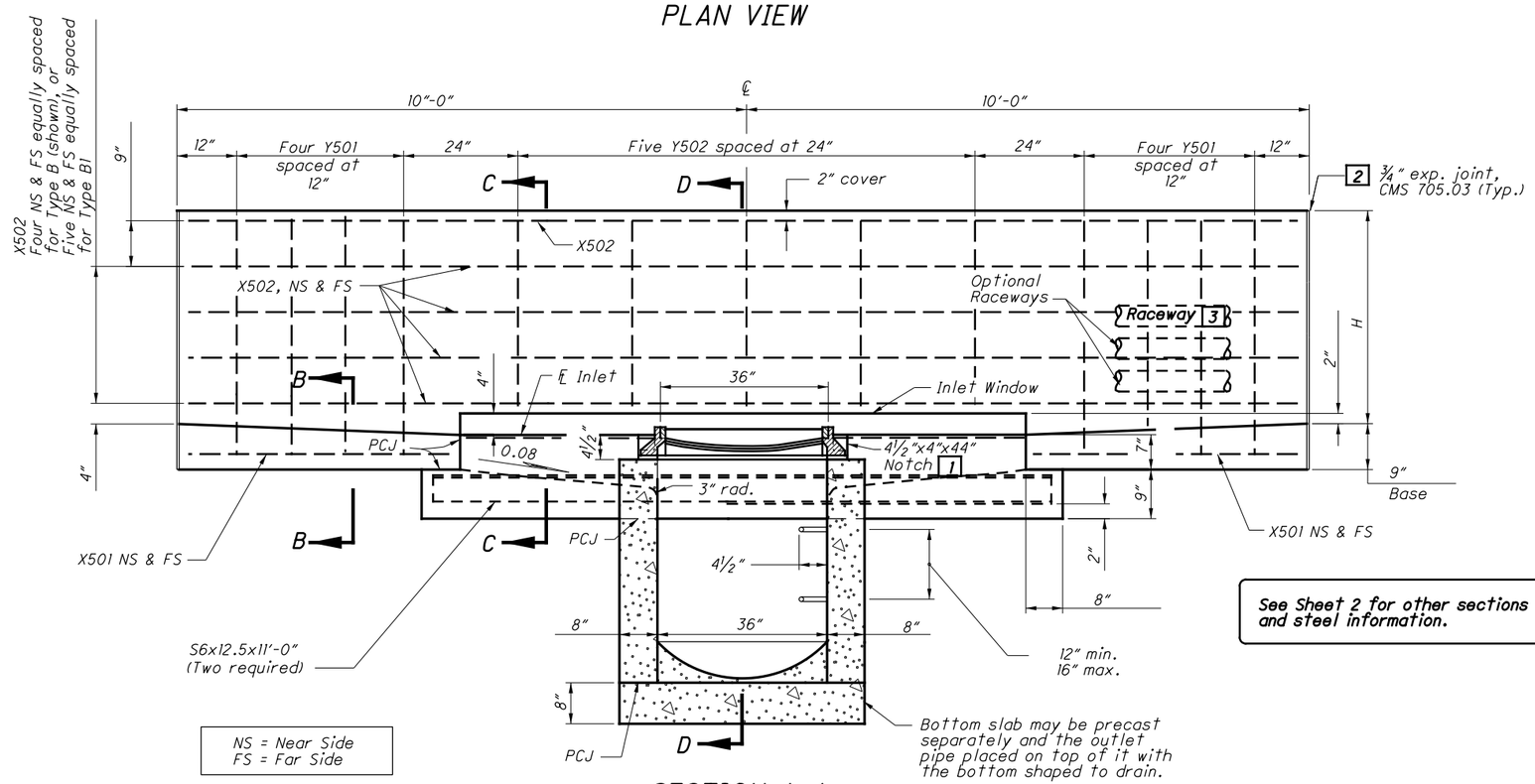


SECTION A-A

NS = Near Side
FS = Far Side

See Sheet 2 for other sections and steel information.

## NOTES

**GENERAL:** For details of Single Slope Concrete Barriers, see SCD RM-4.3.

**WALLS:** The walls between the bottom slab and the upper permissible construction joint may be built of brick, concrete block or cast-in-place concrete, 8" nominal thickness for depths of 12' or less. Precast walls have a minimum thickness of 6" and are reinforced sufficiently to permit shipping and handling without damage. The unit above the upper permissible construction joint may be precast or cast-in-place.

**CONCRETE:** Provide 4000 psi compressive strength concrete for cast-in-place structures. When precast, provide concrete that meets the requirements of CMS 706.13. Mark the inlet number on the structure. Seal the exposed concrete surfaces of the barrier per Item 512 when specified in the plans.

**REINFORCING STEEL:** Provide epoxy coated reinforcing steel in accordance with CMS 509.09.

**CASTINGS:** Minimum weight of frame and cover is 540 lbs. See Sheet 2 for CASTING DETAILS.

Lighter weight frames and grates that meet the requirements of CMS 711.14 may also be provided. Grate openings and dimensions may not differ from those shown unless otherwise shown in the plans.

**STEPS:** Provide steps in accordance with SCD MH-1.1.

**INLETS OVER 12 FEET IN DEPTH:** Precast or cast-in-place inlets over 12 feet in depth. Reinforce with #5 bars on 12" centers both vertically and horizontally with 2" clearance from the inside wall face.

**OPENINGS:** Pipe openings are the outside diameter of the pipe being supplied plus 2" when fabricated or field cut. Fill any voids per CMS 601.

**PCJ:** Permissible construction joint.

**PAYMENT:** Payment will be made at the unit price bid per Each for Item 611 - Inlet, No. 3 for Single Slope Barrier, Type ____ (B or B1) and includes all materials, reinforcing steel, castings, raceways, wiring and labor required to construct the inlet as shown. Sealing of exposed concrete and sealing of the barrier will be paid for under Item 512 when specified in the plans.

## LEGEND

1. After casting is placed, fill notch with 4000 psi compressive strength concrete.
2. Provide a 1½" minimum expansion joint in concrete pavement or concrete shoulders.
3. 4" electrical raceway for Types B & B1. See Sheet 2 for RACEWAY PLACEMENT Details.

STANDARD INLET TYPES

| INLET NO. 3 | W | H | A | B |
|---|---|---|---|---|
| Type B | 12" | 42" | 4" | 28" |
| Type B1 | 12" | 57" | 1⅛" | 33¾" |

STATE OF OHIO DEPARTMENT OF TRANSPORTATION

STATE HYDRAULIC ENGINEER

REVISIONS
7-16-04
7-15-05
10-21-11
7-20-12
1-18-13

ROADWAY HYDRAULIC ENGINEER
Matt Cozzoli

OFFICE OF HYDRAULIC ENGINEERING

STANDARD HYDRAULIC CONSTRUCTION DRAWING

INLET No. 3 FOR SINGLE SLOPE BARRIER, TYPES B & B1

SCD NUMBER
I-2.1

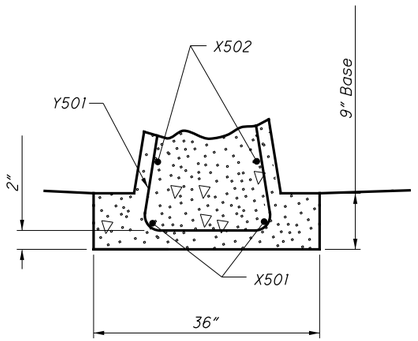


## PARTIAL SECTION B-B

See Sheet 1

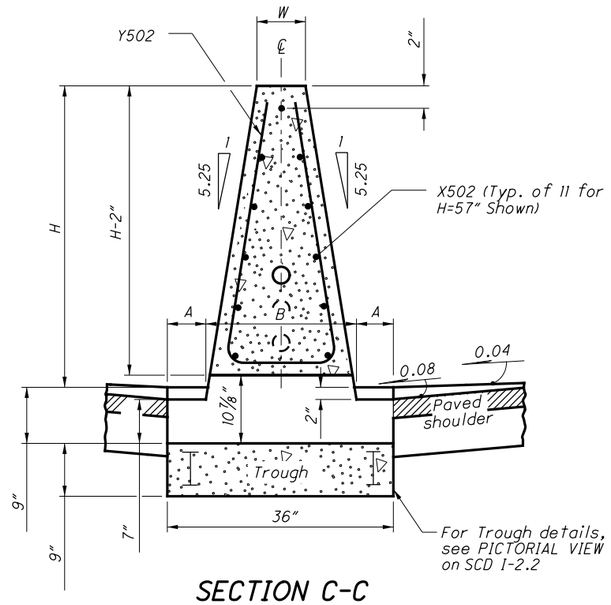


## SECTION C-C

See Standard Inlet Types on first sheet for dimensions A, B. H and W.

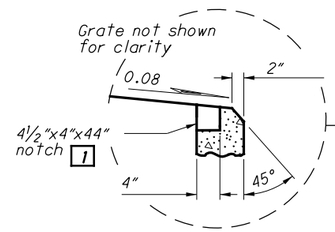


## ALTERNATE SPILLWAY DETAIL

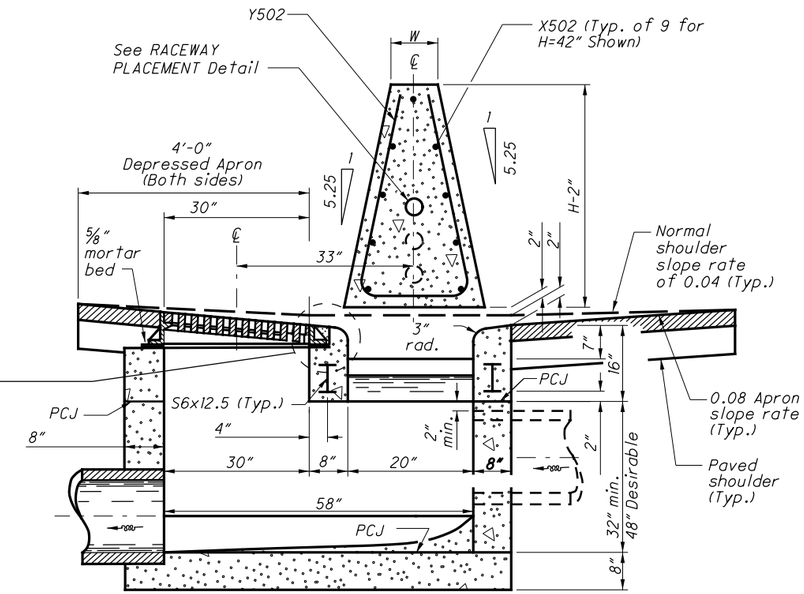


## SECTION D-D

See Sheet 1

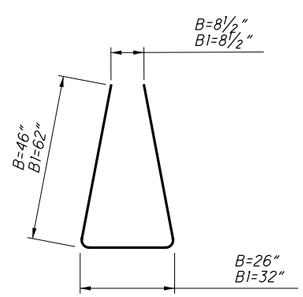


**Y501**

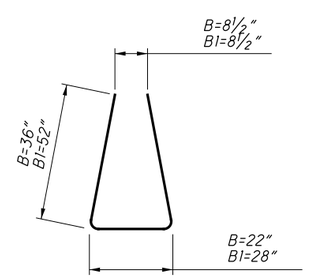


**Y502**

## BENDING DIAGRAMS

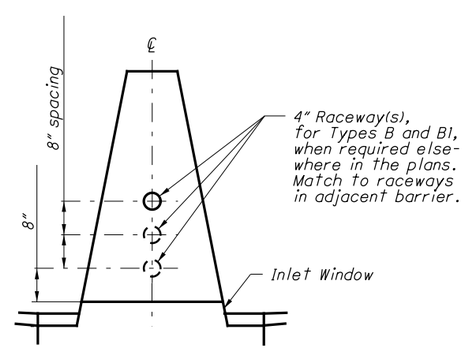


## RACEWAY PLACEMENT

(Over Inlet Window)

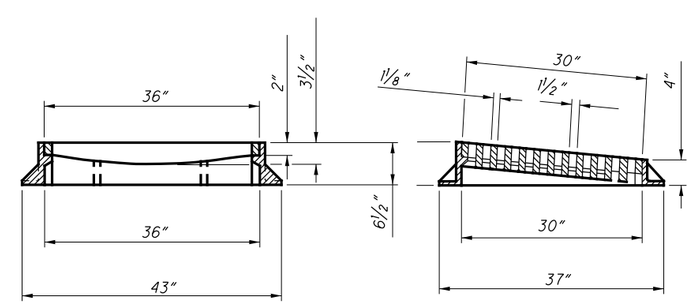


## CASTING DETAILS

| STEEL LIST (For Estimating Purposes Only) | | | | | | | | | | |
|---|---|---|---|---|---|---|---|---|---|---|
| INLET NO. 3 | X501 #5 Straight | | X502 #5 Straight | | Y501 #5 Bent | | Y502 #5 Bent | | S6x12.5 | |
| | No. | Length | No. | Length | No. | Length | No. | Length | No. | Length |
| Type B | 4 | 4'-8" | 9 | 19'-8" | 8 | 9'-9" | 5 | 7'-9" | 2 | 11'-0" |
| Type B1 | 4 | 4'-8" | 11 | 19'-8" | 8 | 12'-9" | 5 | 10'-9" | 2 | 11'-0" |

For Standard Inlet Types, NOTES, LEGEND, Plan and Section A-A, see Sheet 1.

STATE OF OHIO DEPARTMENT OF TRANSPORTATION

STATE HYDRAULIC ENGINEER

REVISIONS
7-16-04
7-15-05
10-21-11
7-20-12
1-18-13

ROADWAY HYDRAULIC ENGINEER
Matt Cozzoli

OFFICE OF HYDRAULIC ENGINEERING

STANDARD HYDRAULIC CONSTRUCTION DRAWING

INLET No. 3 FOR SINGLE SLOPE BARRIER, TYPES B & B1

SCD NUMBER
I-2.1

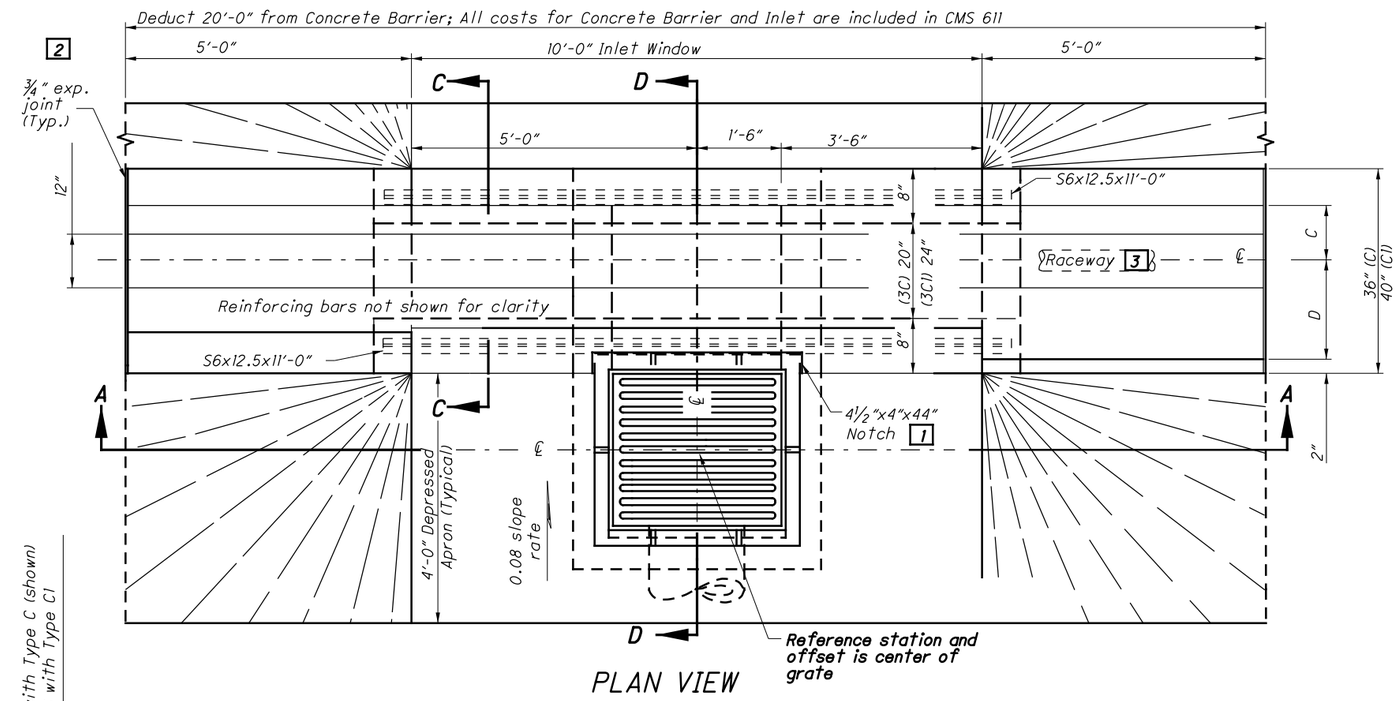


PLAN VIEW

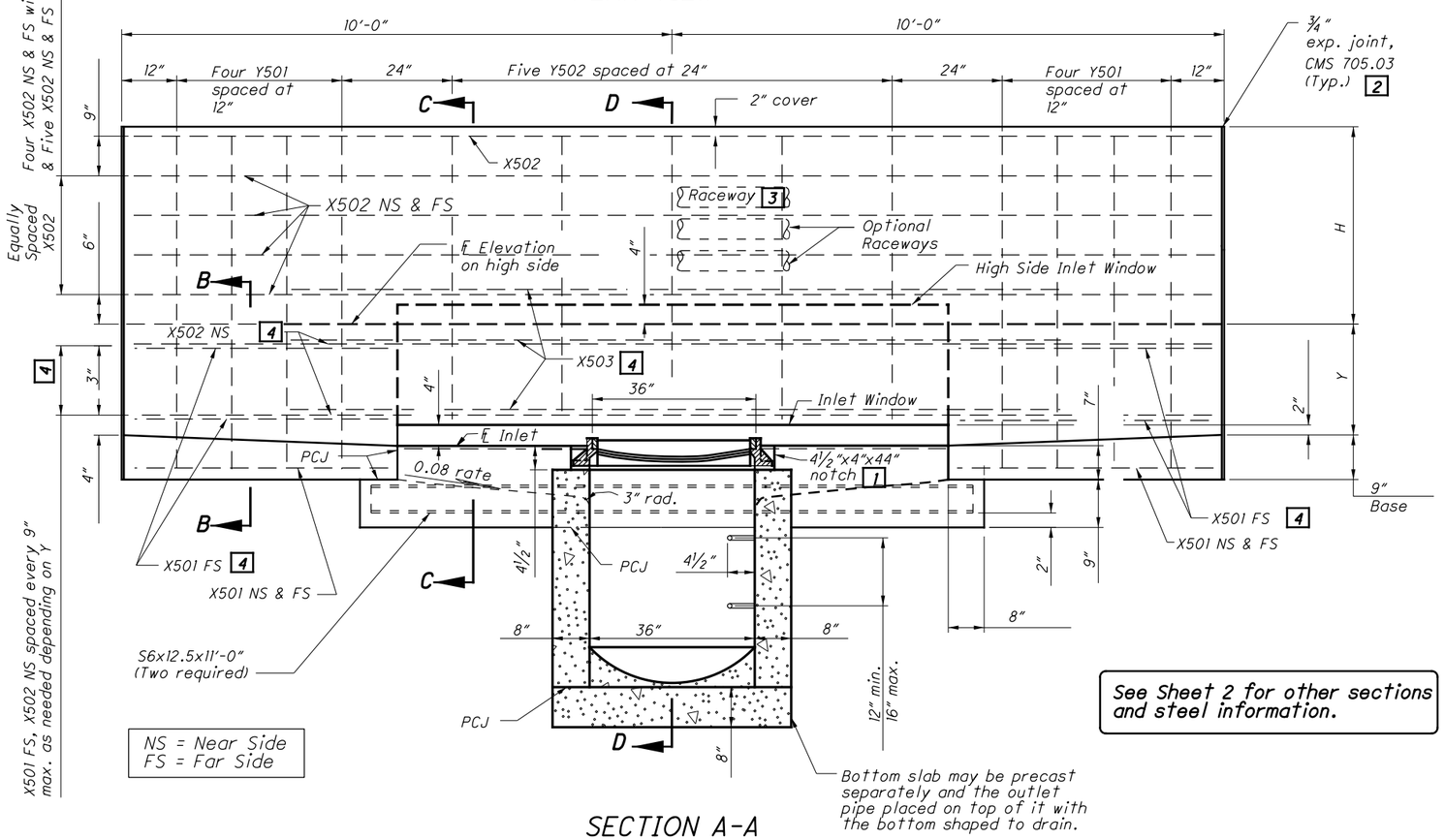


SECTION A-A

## NOTES

**GENERAL:** See SCD RM-4.3 for details of Single Slope Concrete Barriers.

**VARIABLE DIMENSIONS:** Y denotes bifrucation and varies from greater than 0 to 24", as shown in the plans. Dimension D is dependent on Y and also varies.

**WALLS:** The walls between the bottom slab and the upper permissible construction joint may be built of brick, concrete block or cast-in-place concrete with a nominal thickness of 8" for depths of 12' or less. If precast, provide walls with a minimum thickness of 6" and reinforcement sufficient to permit shipping and handling without damage. The unit above the upper permissible construction joint may be precast or cast-in-place.

**CONCRETE:** Provide 4000 psi compressive strength concrete if cast-in-place. When precast, provide concrete that meets the requirements of CMS 706.13. Mark the inlet number on the structure. Seal the exposed concrete surfaces of the inlet per item 512 when specified in the plans.

**REINFORCING STEEL:** Provide epoxy coated reinforcing steel in accordance with CMS 509.09.

**CASTINGS:** Minimum mass of frame and cover is 540 lbs. See this sheet for CASTING DETAILS.

Lighter weight frames and grates that meet the requirements of CMS 711.14 may also be provided. Grate openings and dimensions may not differ from those shown unless otherwise shown in the plans.

**STEPS:** Provide steps in accordance with SCD MH-1.1.

**INLETS OVER 12 FEET IN DEPTH:** Provide precast or cast-in-place concrete for inlets over 12 feet in depth. Reinforce with #5 bars on 12" centers both vertically and horizontally with 2" clearance from the inside wall face.

**OPENINGS:** Pipe openings are the outside diameter of the pipe being supplied plus 2" when fabricated or field cut. Fill any voids per CMS 601.

**PCJ:** Permissible construction joint.

**PAYMENT:** Payment will be made at the unit price bid per Each for Item 611 - Inlet No. 3, for Single Slope Barrier, Type ____ (C or CI) and includes all materials, reinforcing steel, castings, raceways, wiring and labor required to construct the inlet, as shown. Sealing of exposed concrete and sealing of the barrier will be paid for under Item 512 when specified in the plans.

## LEGEND

1. After casting is placed, fill notch with 4000 psi compressive strength concrete.
2. Provide a 1 1/2" minimum exp. joint in concrete pavement or concrete shoulders.
3. 4" electrical raceway. See Sheet 2 for RACEWAY PLACEMENT Details.
4. Number of X501, X502 and X503 reinforcing bars varies depending on bifrucation (Dimension Y).

**STANDARD INLET TYPES**

| INLET No. 3 | H | C | D |
|---|---|---|---|
| Type C | 42" | 14" | Varies from 14" when Y=0, to 18 3/8" when Y=24" |
| Type CI | 57" | 16 7/8" | Varies from 16 7/8" when Y=0, to 21 3/8" when Y=24" |

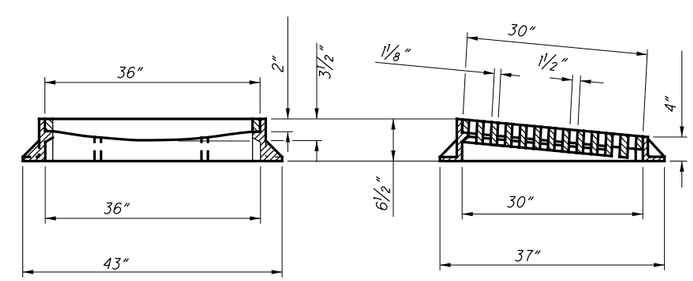


CASTING DETAILS

STATE OF OHIO DEPARTMENT OF TRANSPORTATION

STATE HYDRAULIC ENGINEER

REVISIONS
7-16-04
7-15-05
7-20-12
1-18-13

ROADWAY HYDRAULIC ENGINEER
Matt Cozzoli

OFFICE OF HYDRAULIC ENGINEERING

STANDARD HYDRAULIC CONSTRUCTION DRAWING

INLET No. 3 FOR SINGLE SLOPE BARRIER, TYPES C & C1

SCD NUMBER I-2.2

1 / 2

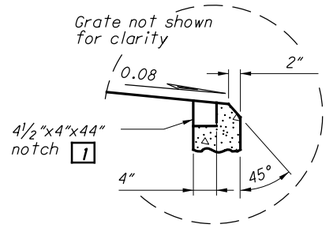


ALTERNATE SPILLWAY DETAIL

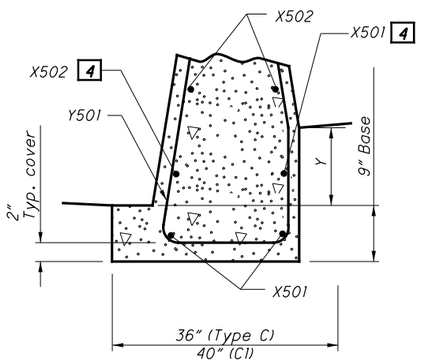


PARTIAL SECTION B-B

See Sheet 1

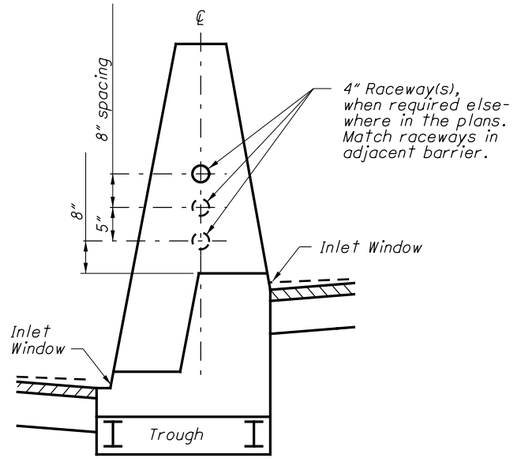


RACEWAY PLACEMENT

(Over Inlet Window)

For Standard Inlet Types, NOTES, LEGEND, Plan View and Section A-A, see Sheet 1.

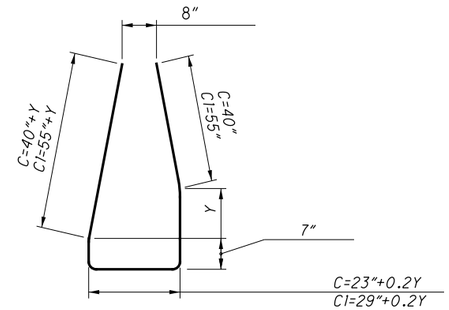


Y501

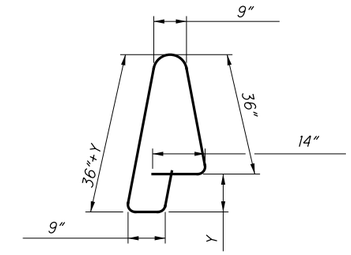


Y502
For Type C

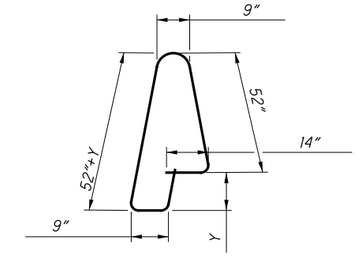


Y502
For Type C1

BENDING DIAGRAMS

## STEEL LIST (For Estimating Purposes Only)

| INLET NO. 3 | X501 4 #5 | | X502 4 #5 | | X503 4 #5 | | Y501 #5 | | Y502 #5 | | S6x12.5 | |
|---|---|---|---|---|---|---|---|---|---|---|---|---|
| | Straight | | Straight | | Straight | | Bent | | Bent | | | |
| | No. | Length | No. | Length | No. | Length | No. | Length | No. | Length | No. | Length |
| Type C | Varies 4 to 8 | 4'-8" | Varies 9 to 11 | 19'-8" | Varies 1 to 3 | 12'-0" | 8 | Varies 9'-6" to 13'-11" | 5 | Varies 8'-0" to 12'-0" | 2 | 11'-0" |
| Type C1 | Varies 4 to 8 | **4'-8"** | Varies 11 to 13 | 19'-8" | Varies 1 to 3 | **12'-0"** | 8 | Varies 12'-6" to 16'-11" | 5 | Varies 10'-6" to 14'-6" | 2 | 11'-0" |

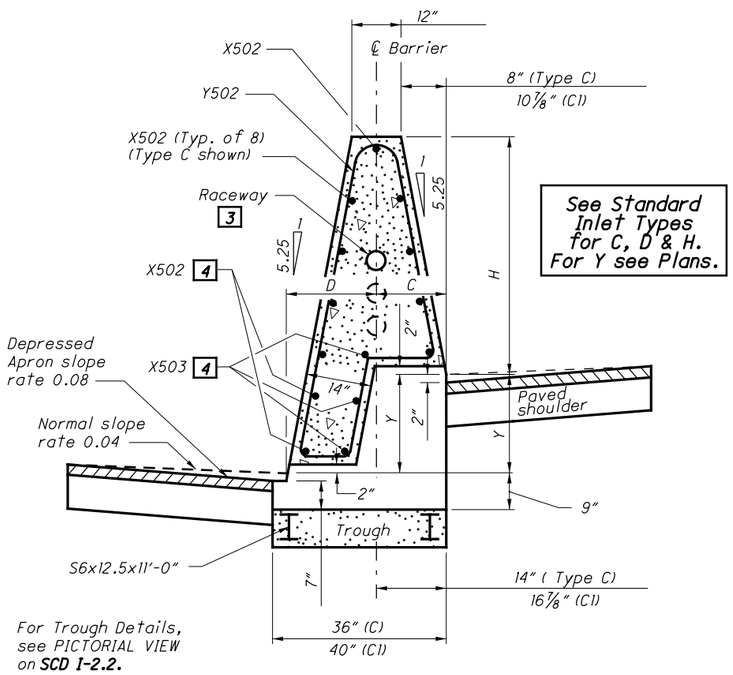


See Standard Inlet Types for C, D & H. For Y see Plans.

For Trough Details, see PICTORIAL VIEW on **SCD I-2.2.**

SECTION C-C

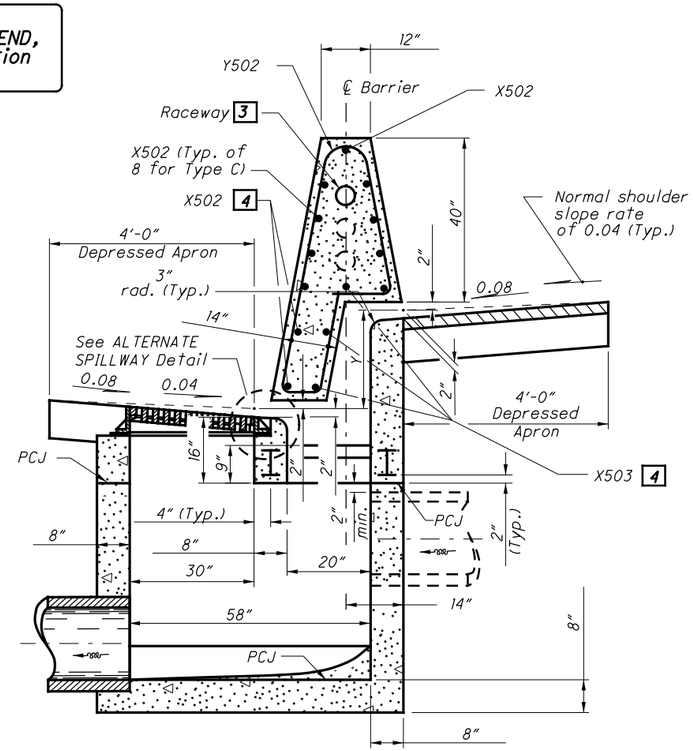


**TYPE C**
H=42"

SECTION D-D

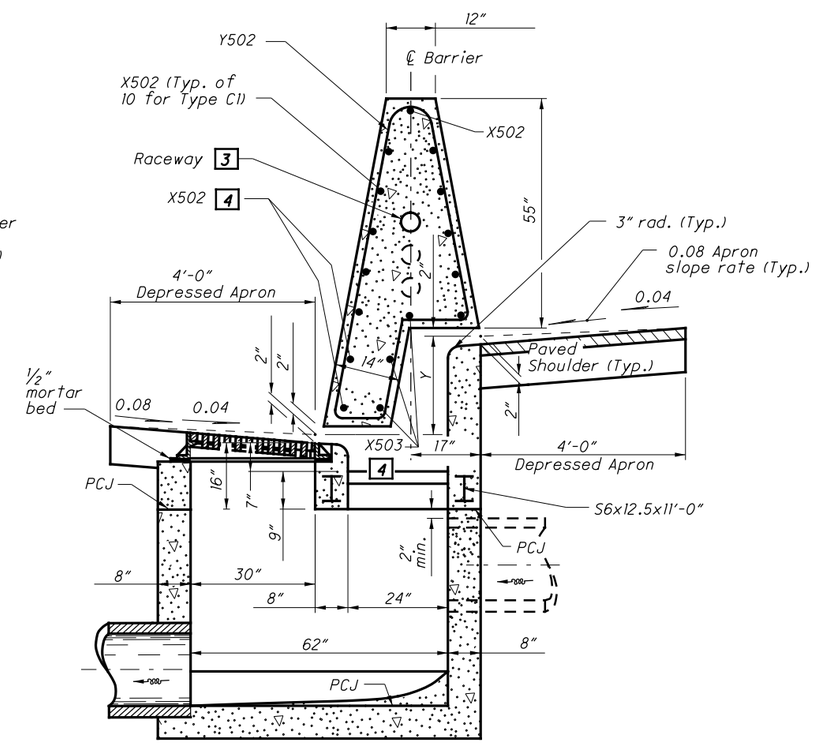


**TYPE C1**
H=57"

SECTION D-D

STATE OF OHIO DEPARTMENT OF TRANSPORTATION

STATE HYDRAULIC ENGINEER

REVISIONS
7-16-04
7-15-05
7-20-12
1-18-13

ROADWAY HYDRAULIC ENGINEER
Matt Cozzoli

OFFICE OF HYDRAULIC ENGINEERING

STANDARD HYDRAULIC CONSTRUCTION DRAWING

**INLET No.3 FOR SINGLE SLOPE BARRIER, TYPES C & C1**

SCD NUMBER
**I-2.2**

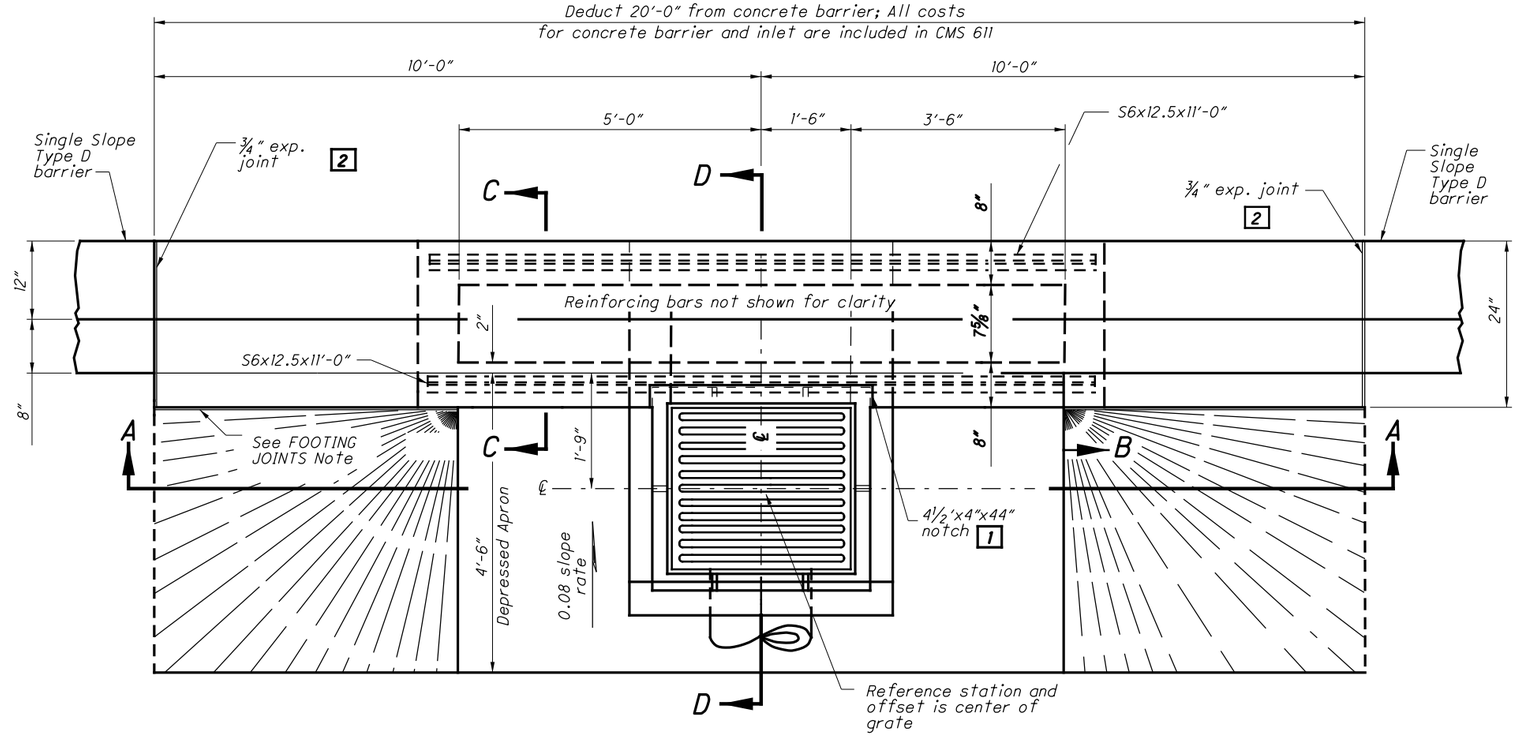


PLAN VIEW

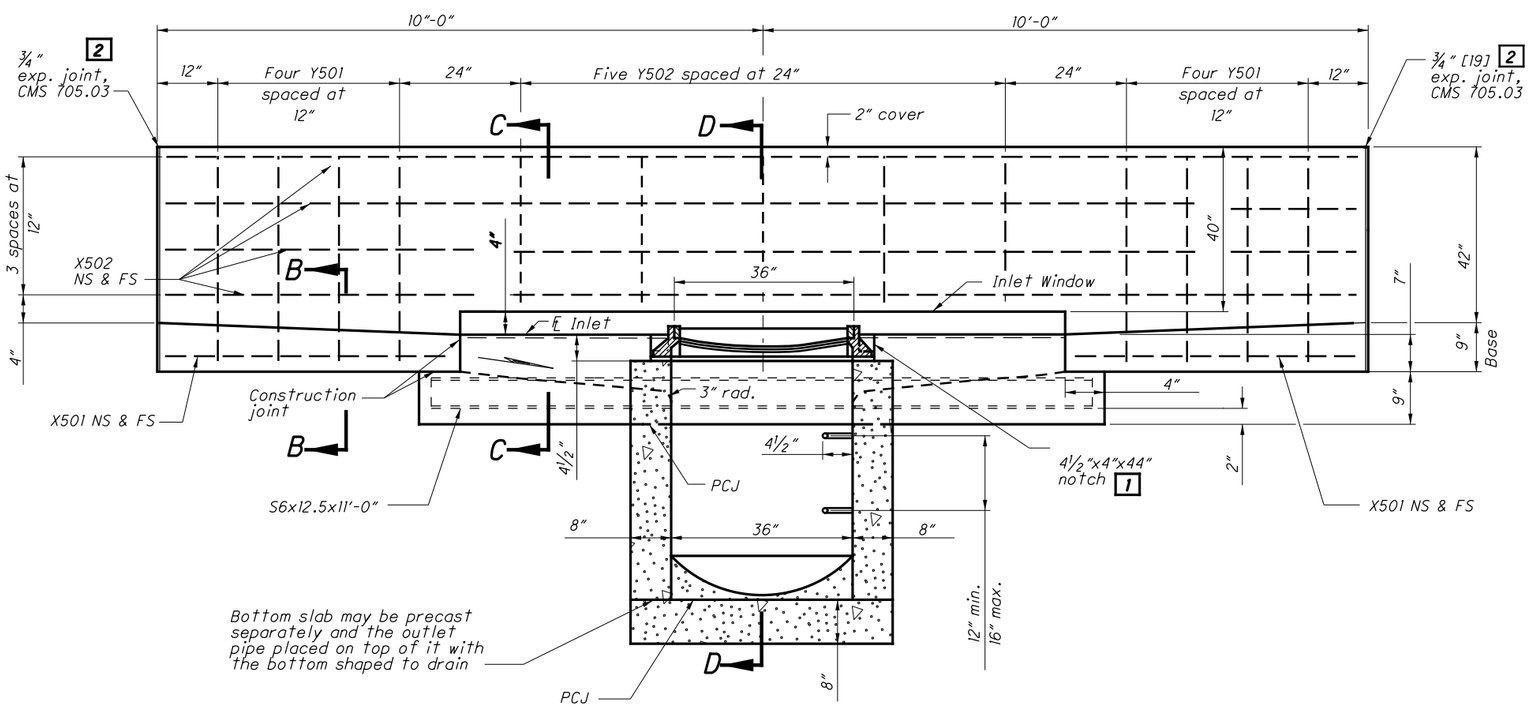


SECTION A-A

## NOTES

**GENERAL:** For details of Type D concrete barriers, see SCD RM-4.5.

**WALLS:** The walls between the bottom slab and the upper permissible construction joint may be built of brick, concrete, concrete block, or cast-in-place concrete, 8" nominal thickness for depths of 12' or less. Precast walls have a minimum thickness of 6" and are reinforced sufficiently to permit shipping and handling without damage. The unit above the permissible construction joint may be precast or cast-in-place.

**CONCRETE:** Provide 4000 psi compressive strength concrete for cast-in-place structures. All precast concrete must meet the requirements of CMS 706.13. Mark the inlet number on the structure. Seal the exposed concrete surfaces of the barrier per Item 512 when specified in the plans.

**REINFORCING STEEL:** Provide epoxy coated reinforcing steel in accordance with CMS 509.09.

**FOOTING JOINTS:** Provide a sealed joint with the vertical walls between the barrier footing and a concrete pavement or concrete base as detailed on SCD RM-4.3.

**CASTINGS:** The minimum weight of frame and cover is 540 lbs. See Sheet 2 for casting details.

Lighter weight frames and grates that meet the requirements of CMS 711.14 may also be provided. Grate openings and dimensions may not differ from those shown unless otherwise shown in the plans.

**STEPS:** Provide steps according to SCD MH-1.1

**GRATE LOCATION:** In superelevated curves or at other locations where there is unequal discharge from the directional roadways, locate the inlet grating in the roadway which discharges the major flow.

**INLETS OVER 12 FEET IN DEPTH:** Provide precast or cast-in-place concrete for inlets over 12 feet in depth. Reinforce with #4 bars on 12" centers both vertically and horizontally with 2" clearance from the inside wall face.

**OPENINGS:** Pipe openings may be no greater than the outside diameter of the pipe being supplied plus 2" when fabricated or field cut. Fill any voids per CMS 601.

**PCJ:** Permissible construction joint

**PAYMENT:** Payment will be made at the unit price bid per Each for Item 611 - Inlet No. 3 for Single Slope Barrier, Type D and includes all materials, reinforcing steel, castings, labor and incidentals required to construct the inlet as shown. Sealing of exposed concrete and sealing of the barrier will be paid for under Item 512 when specified in the plans.

## LEGEND

1 After casting is placed, fill notch with 4000 psi compressive strength concrete.

2 Provide a 1½" minimum exp. joint in concrete pavement or concrete shoulders.

See Sheet 2 for other sections and steel information.

STATE OF OHIO DEPARTMENT OF TRANSPORTATION

STATE HYDRAULIC ENGINEER

REVISIONS
7-16-04
7-15-05
7-20-12
1-18-13

ROADWAY HYDRAULIC ENGINEER
Matt Cozzoli

OFFICE OF HYDRAULIC ENGINEERING

STANDARD HYDRAULIC CONSTRUCTION DRAWING

INLET No. 3 FOR SINGLE SLOPE BARRIER, TYPE D

SCD NUMBER
I-2.3

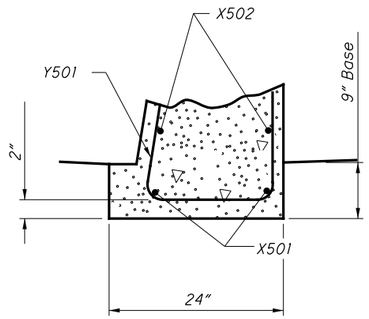


## PARTIAL SECTION B-B

See Sheet 1

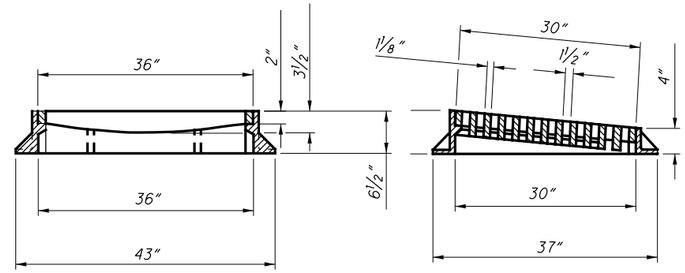


## CASTING DETAILS

| STEEL LIST (For Estimating Purposes Only) | | | | | | | | | | |
|---|---|---|---|---|---|---|---|---|---|---|
| INLET No. 3 | X501 #5 | | X502 #5 | | Y501 #5 | | Y502 #5 | | S6x12.5 | |
| | Straight | | Straight | | Bent | | Bent | | | |
| | No. | Length | No. | Length | No. | Length | No. | Length | No. | Length |
| Type D | 4 | 4'-8" | 8 | 19'-8" | 8 | 8'-8" | 5 | 7'-0" | 2 | 11'-0" |

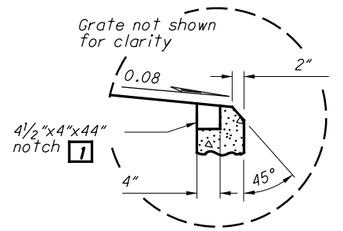


## ALTERNATE SPILLWAY DETAIL

See SECTION D-D

For NOTES, LEGEND, Plan and Section A-A, see Sheet 1.

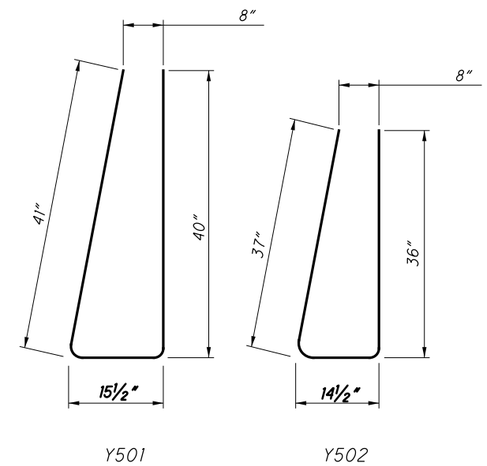


## BENDING DIAGRAMS

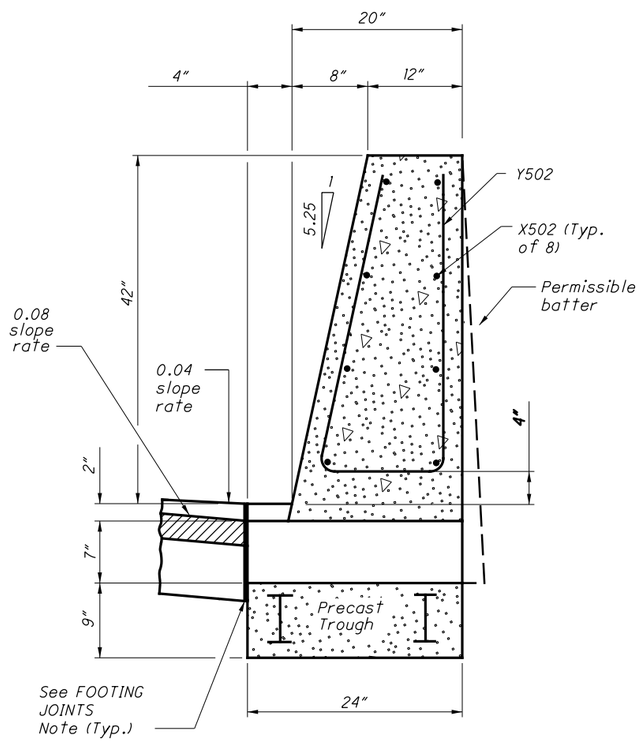


## SECTION C-C

See Sheet 1

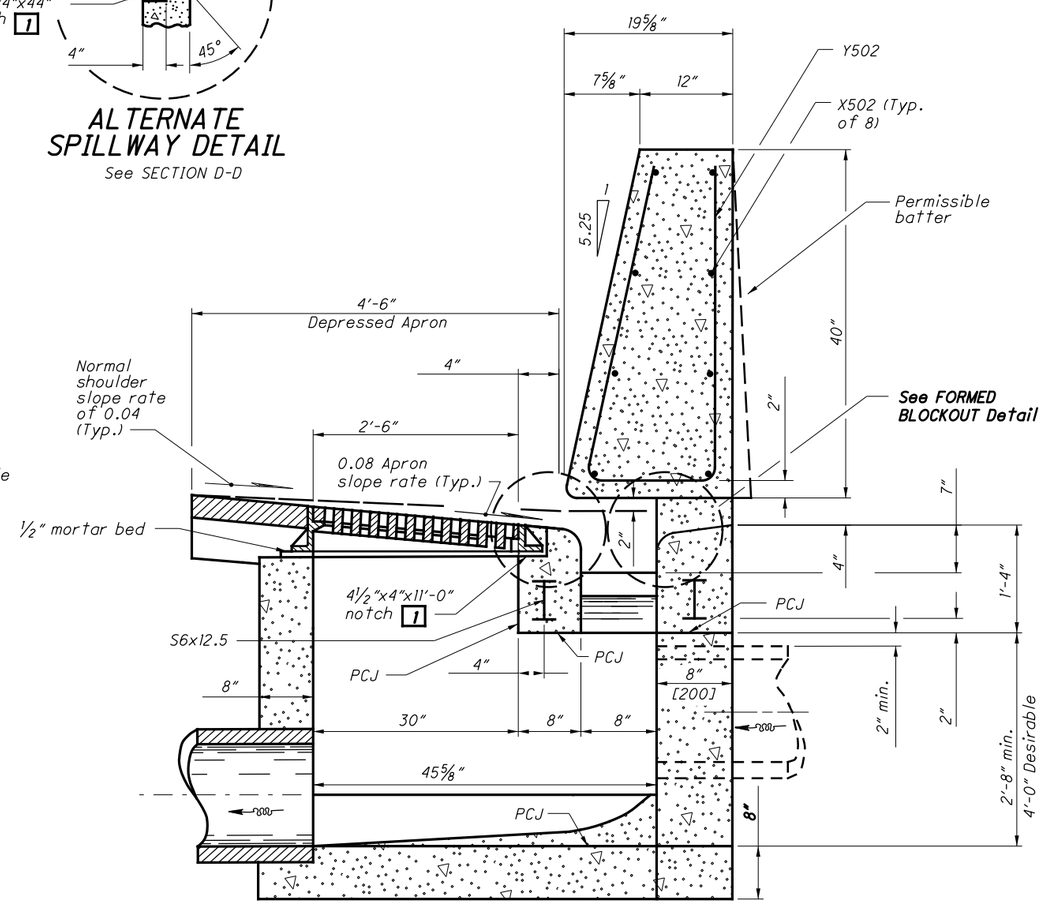


## SECTION D-D

See Sheet 1

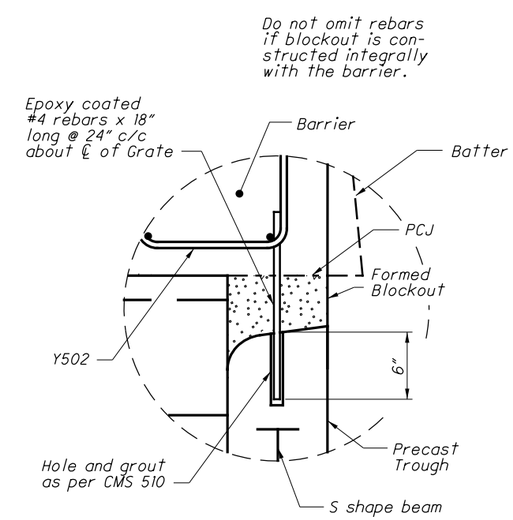


## FORMED BLOCKOUT DETAIL

STATE OF OHIO DEPARTMENT OF TRANSPORTATION

STATE HYDRAULIC ENGINEER

REVISIONS
7-16-04
7-15-05
7-20-12
1-18-13

ROADWAY HYDRAULIC ENGINEER
Matt Cozzoli

OFFICE OF HYDRAULIC ENGINEERING

STANDARD HYDRAULIC CONSTRUCTION DRAWING

INLET No. 3 FOR SINGLE SLOPE BARRIER, TYPE D

SCD NUMBER
I-2.3

2 / 2

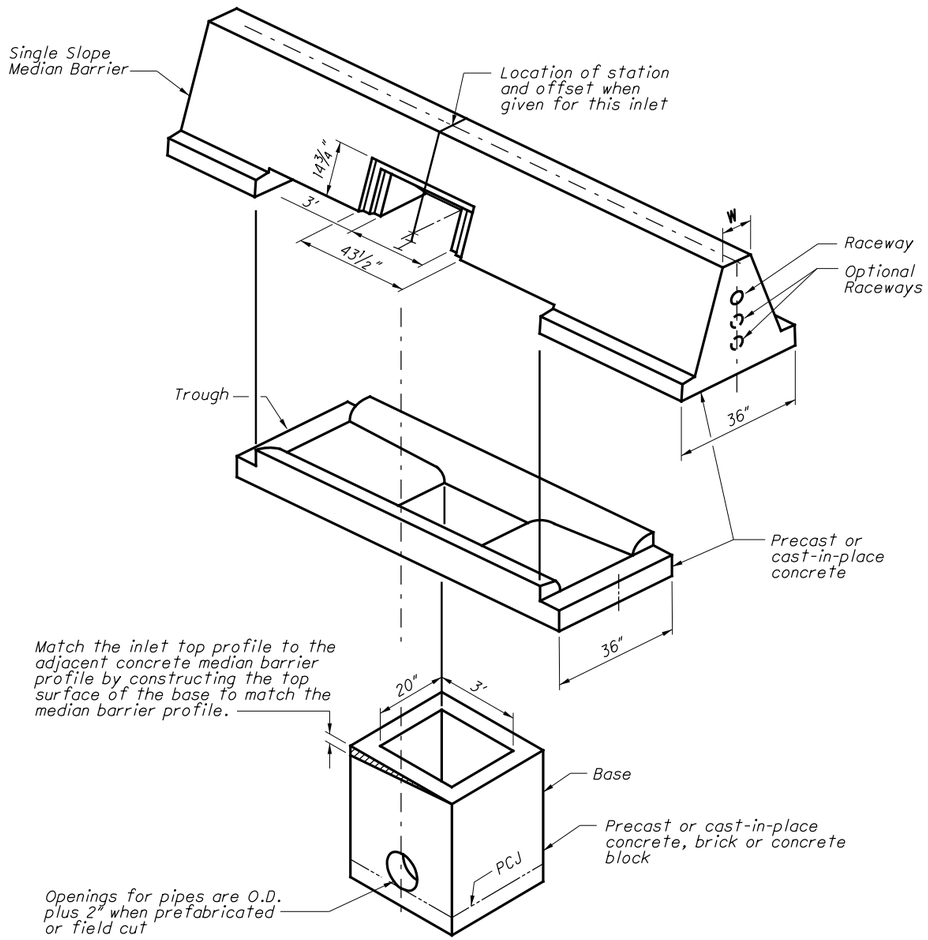


PICTORIAL VIEW

## NOTES

**GENERAL:** For details of Single Slope Concrete Barriers, see SCD RM-4.3.

**WALLS:** The walls between the bottom slab and the upper permissible construction joint may be built of brick, concrete block or cast-in-place concrete, 8" nominal thickness for depths of 12' or less. Precast walls have a minimum thickness of 6" and are reinforced sufficiently to permit shipping and handling without damage.

**CONCRETE:** Provide 4000 psi compressive strength concrete when cast-in-place. When precast, provide concrete that meets the requirements of CMS 706.13. Mark the Inlet number on the structure. Seal the exposed concrete surfaces of the barrier per Item 512 when specified in the plans.

**REINFORCING STEEL:** Provide epoxy coated reinforcing steel in accordance with CMS 509.09.

**STEPS:** Provide steps in accordance with SCD MH-1.1.

**INLETS OVER 12 FEET IN DEPTH:** Precast or cast-in-place inlets over 12 feet in depth. Reinforce with #5 bars on 12" centers both vertically and horizontally, with 2" clearance from the inside wall face.

**OPENINGS:** Pipe openings are the outside diameter of the pipe being supplied plus 2" when fabricated or field cut. Fill any voids per CMS 601.

**ACCESS DOOR:** Provide galvanized steel for the door, frame and all inserts. Provide stainless steel hex head bolts.

**DEPRESSED APRON:** Slope the aprons on both sides of the inlet toward windows and fill with 4000 psi compressive strength concrete. On superelevated sections, slope the aprons as shown in Section C-C.

**PCJ:** Permissible construction joint.

**PAYMENT:** Payment will be made at the unit price bid per Each for Item 611 - Inlet, No. 4 for Single Slope Barrier, Type ___ (B or B1) and includes all materials, reinforcing steel, inlets, raceways, wiring, labor and incidentals required to construct the inlet, as shown. Sealing of exposed concrete and sealing of the barrier will be paid for under Item 512 when specified in the plans.

## LEGEND

1 Provide a 1½" minimum exp. joint in concrete pavement or concrete shoulders.

2 4" electrical raceway, if required elsewhere in the plans. See RACEWAY PLACEMENT Details on Sheet 3.

### STANDARD INLET TYPES

| INLET NO. 4 | W | H | A | B |
|---|---|---|---|---|
| Type B | 12" | 42" | 4" | 28" |
| Type B1 | 12" | 57" | 1⅛" | 33¾" |

STATE OF OHIO DEPARTMENT OF TRANSPORTATION

STATE HYDRAULIC ENGINEER

REVISIONS
7-16-04
7-15-05
10-21-11
7-20-12
1-18-13

ROADWAY HYDRAULIC ENGINEER
Matt Cozzoli

OFFICE OF HYDRAULIC ENGINEERING

STANDARD HYDRAULIC CONSTRUCTION DRAWING

INLET No. 4 FOR SINGLE SLOPE BARRIERS, TYPES B & B1

SCD NUMBER
I-2.4

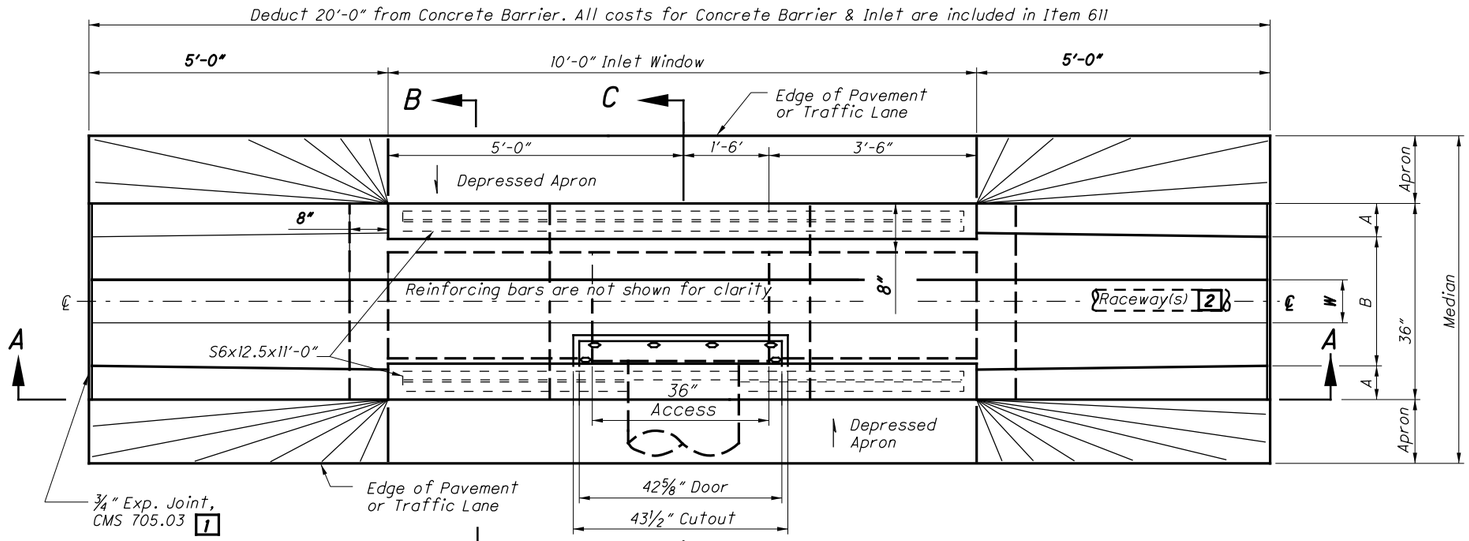


PLAN VIEW
NOT TO SCALE

NS = Near Side
FS = Far Side

For Dimensions W, H, A and B, see Standard Inlet Types on Sheet 1.

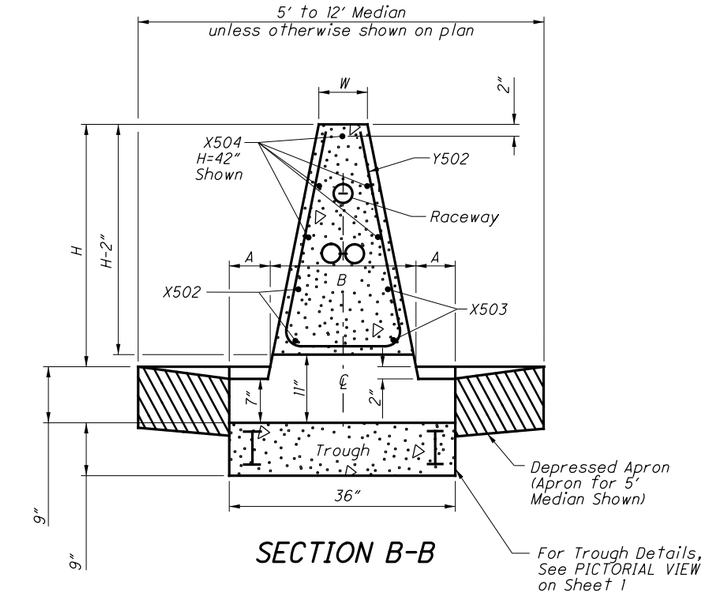


SECTION B-B

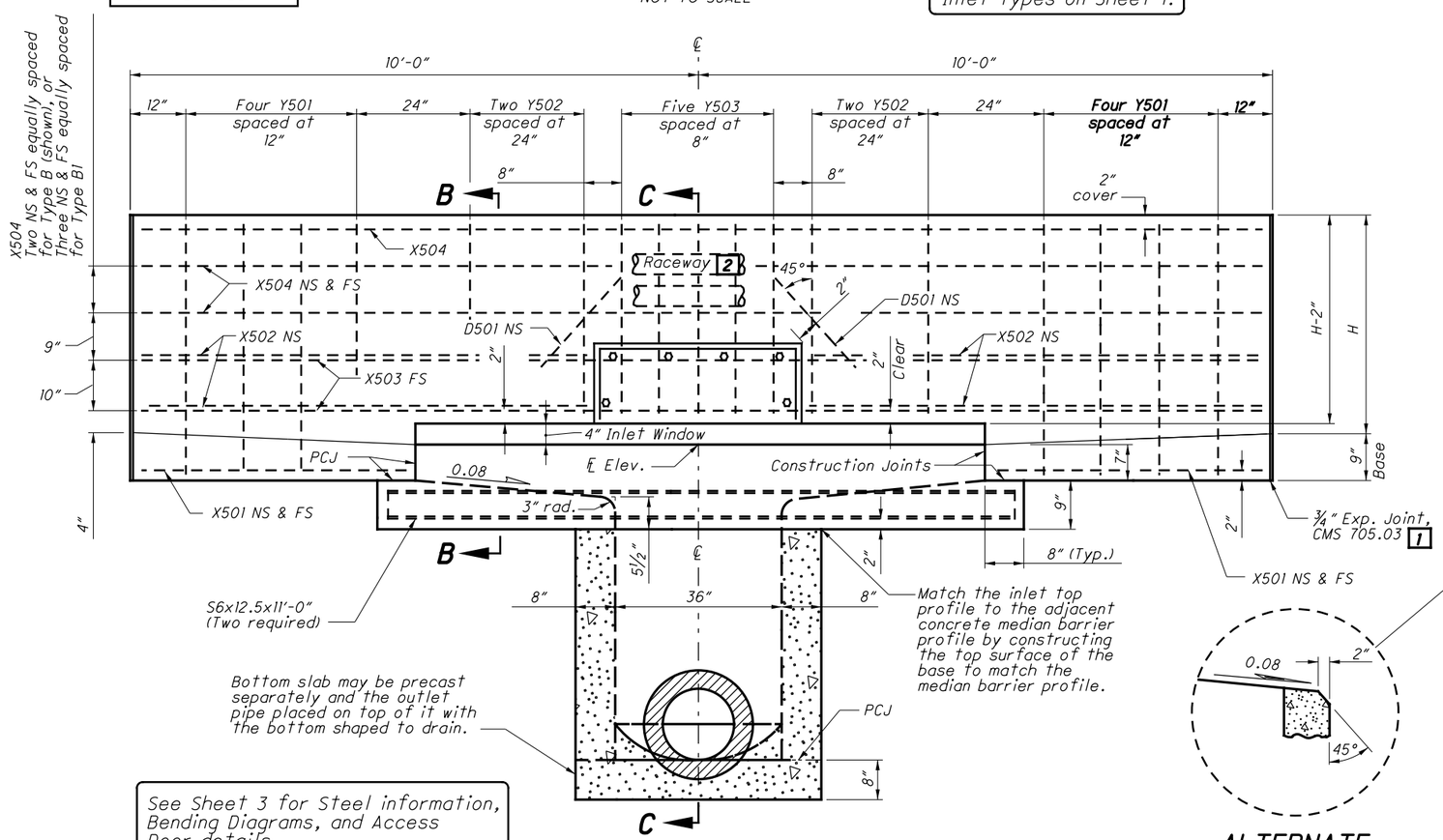


See Sheet 3 for Steel information, Bending Diagrams, and Access Door details.

SECTION A-A




ALTERNATE SPILLWAY DETAIL

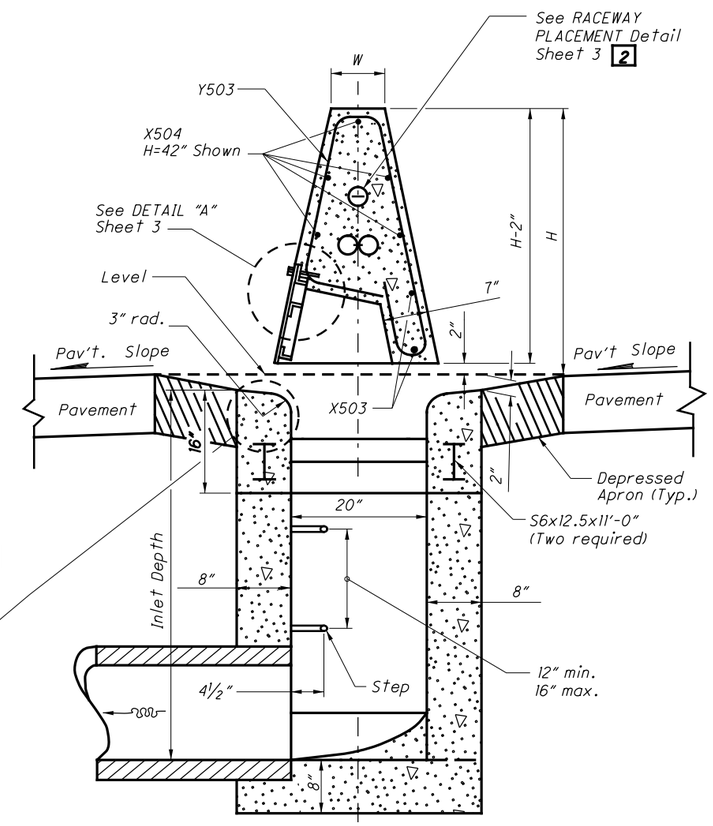


SECTION C-C

STATE OF OHIO DEPARTMENT OF TRANSPORTATION

STATE HYDRAULIC ENGINEER

REVISIONS
7-16-04
7-15-05
10-21-11
7-20-12
1-18-13

ROADWAY HYDRAULIC ENGINEER
Matt Cozzoli

OFFICE OF HYDRAULIC ENGINEERING

STANDARD HYDRAULIC CONSTRUCTION DRAWING

# INLET No. 4 FOR SINGLE SLOPE BARRIER, TYPES B & B1

SCD NUMBER
I-2.4

## STEEL LIST (For Estimating Purposes Only)

| INLET NO. 4 | X501 #5 bar Straight | | X502 #5 bar Straight | | X503 #5 bar Straight | | X504 #5 bar Straight | | Y501 #5 bar Bent | | Y502 #5 bar Bent | | Y503 #5 bar Bent | | D501 #5 bar Straight | | S6x12.5 | |
|---|---|---|---|---|---|---|---|---|---|---|---|---|---|---|---|---|---|---|
| | No. | Length | No. | Length | No. | Length | No. | Length | No. | Length | No. | Length | No. | Length | No. | Length | No. | Length |
| Type B | 4 | 4'-8" | 4 | 7'-10" | 2 | 19'-8" | 5 | 19'-8" | 8 | 9'-9" | 4 | 7'-9" | 5 | 7'-6" | 2 | 2'-0" | 2 | 11'-0" |
| Type B1 | 4 | 4'-8" | 4 | 7'-10" | 2 | 19'-8" | 7 | 19'-8" | 8 | 12'-9" | 4 | 10'-9" | 5 | 10'-5" | 2 | 2'-0" | 2 | 11'-0" |

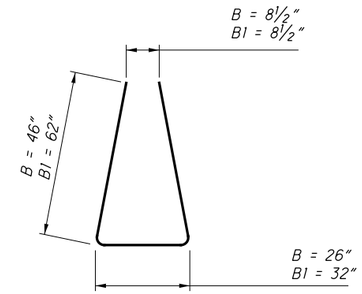


Y501

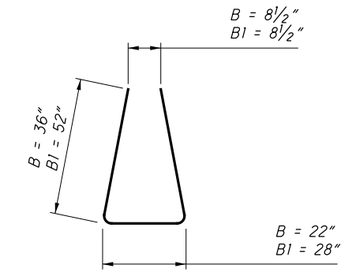


Y502

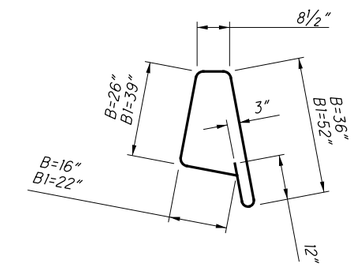


Y503

For Types B and B1

BENDING DIAGRAMS

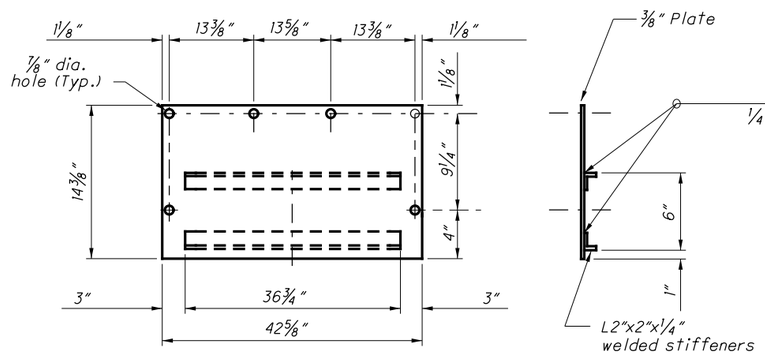


FRONT SIDE

ACCESS DOOR DETAILS

See Sheet 1 for NOTES and LEGEND. See Sheet 2 for Plan, Elevation, and Section Views.

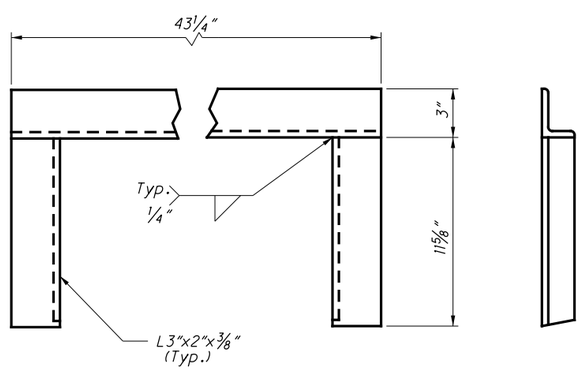


FRONT SIDE

WELDED FRAME DETAIL

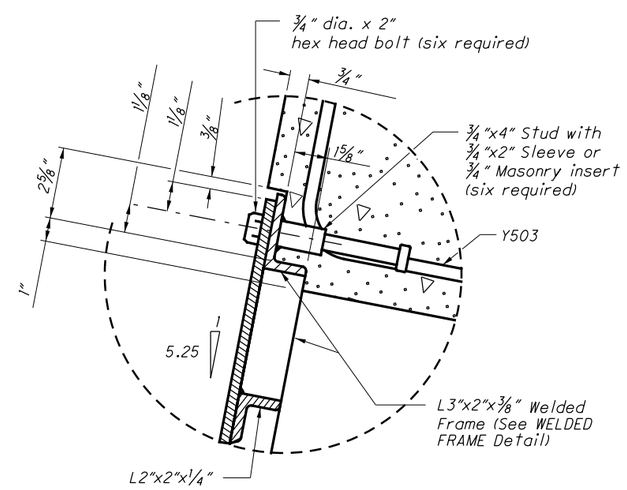


DETAIL "A"

See SECTION C-C ON Sheet 2

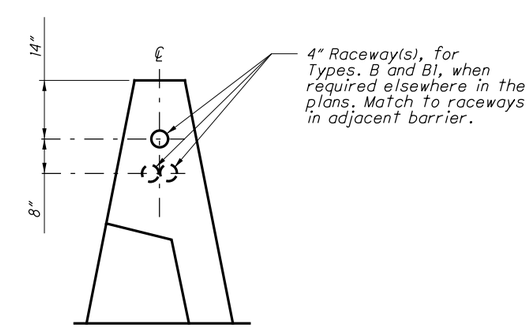


RACEWAY PLACEMENT

(Over Access Cutout)

STATE OF OHIO DEPARTMENT OF TRANSPORTATION

STATE HYDRAULIC ENGINEER

REVISIONS
7-16-04
7-15-05
10-21-11
7-20-12
1-18-13

ROADWAY HYDRAULIC ENGINEER Matt Cozzoli

OFFICE OF HYDRAULIC ENGINEERING

STANDARD HYDRAULIC CONSTRUCTION DRAWING

INLET No. 4 FOR SINGLE SLOPE BARRIER, TYPES B & B1

SCD NUMBER I-2.4