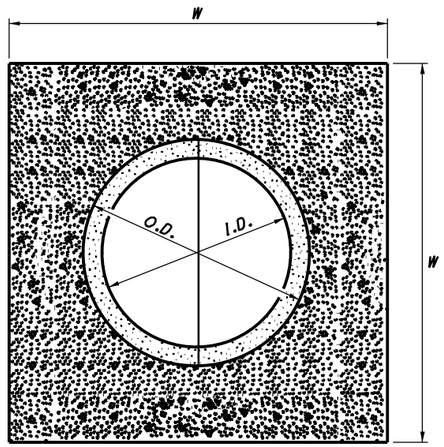

SECTION A-A
(NTS)

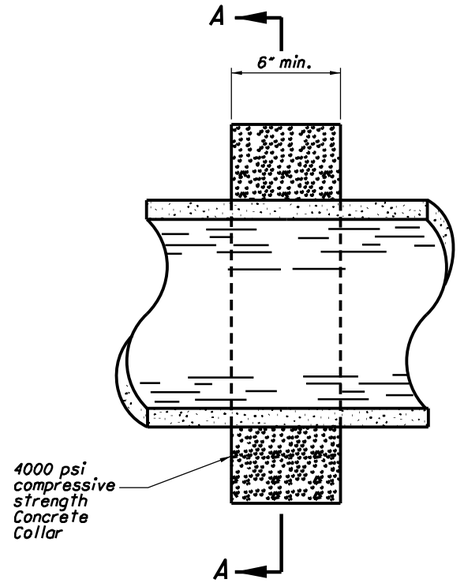

ANTI-SEEP COLLAR
(NTS)

DIAMETER (I.D.) (FT.)	CONCRETE (C.Y.) DIMENSION OF COLLAR W X W (FT.)		
	3X3	4X4	5X5
1	0.15	0.28	0.45
2	N/A	0.24	0.40
3	N/A	N/A	0.33

NOTES

ANTI-SEEP COLLARS: Provide an anti-seep collar as shown in the plans. Payment for the collar is at the contract price for **ITEM 602, CONCRETE MASONRY.**

OBSERVATION WELL: Construct the observation well to a depth and location as shown in the plans. All materials and labor including excavation and backfill are paid for at the contract price for **ITEM 611, OBSERVATION WELL.**

INFILTRATION TRENCH: Construct the infiltration trench to the dimensions shown on the plan. The top 6 inch covering is paid for at the contract price for **ITEM 601, INFILTRATION BASIN AGGREGATE.**

All other materials and labor, including excavation, geotextile fabric, and backfill are paid for at the contract price for **ITEM 203 SPECIAL, INFILTRATION TRENCH.**

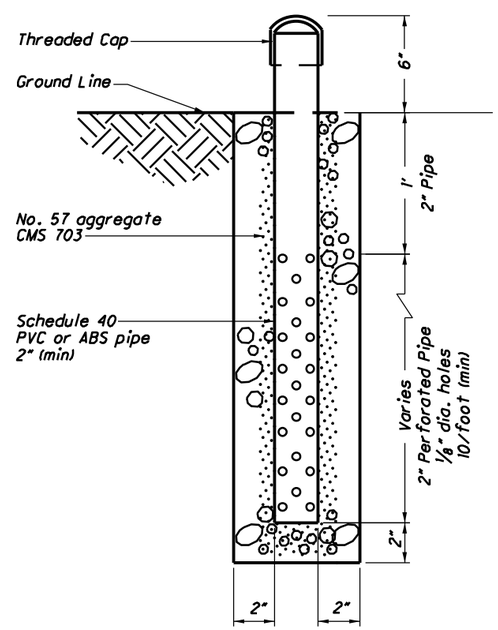

OBSERVATION WELL
NO SCALE

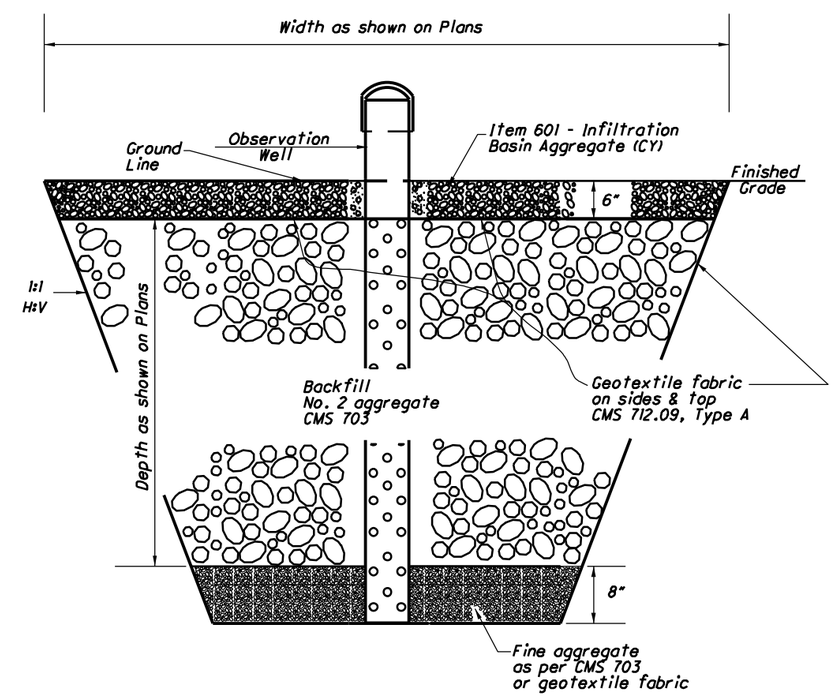

INFILTRATION TRENCH
NO SCALE

STATE OF OHIO DEPARTMENT OF TRANSPORTATION

STATE HYDRAULIC ENGINEER

REVISIONS
1-20-06
4-21-06
10-17-08
7-20-12
1-18-13

ENVIRONMENTAL HYDRAULIC ENGINEER
R. Humphreys

OFFICE OF HYDRAULIC ENGINEERING

STANDARD HYDRAULIC CONSTRUCTION DRAWING
Water Quality - Miscellaneous

SCD NUMBER
WQ-1.2

1 / 1