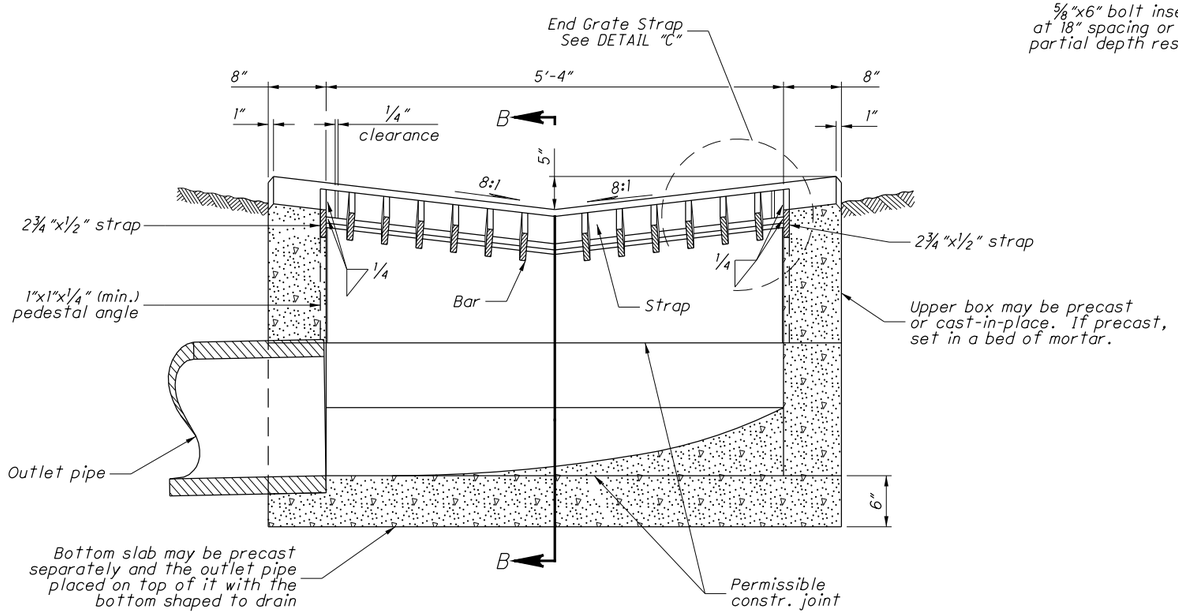

SECTION A-A

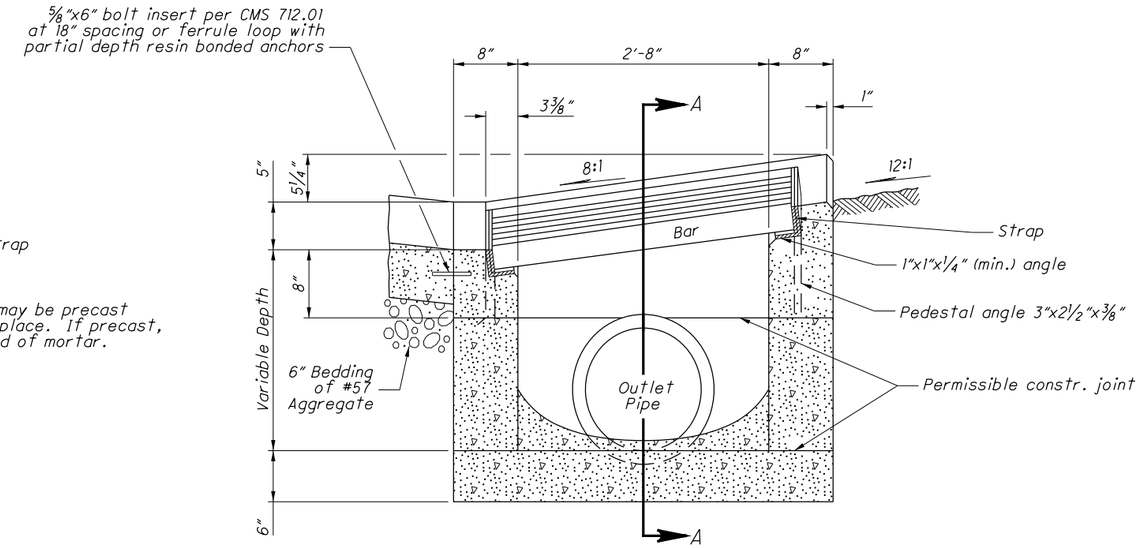

SECTION B-B

See Sht. 2/2 for Notes

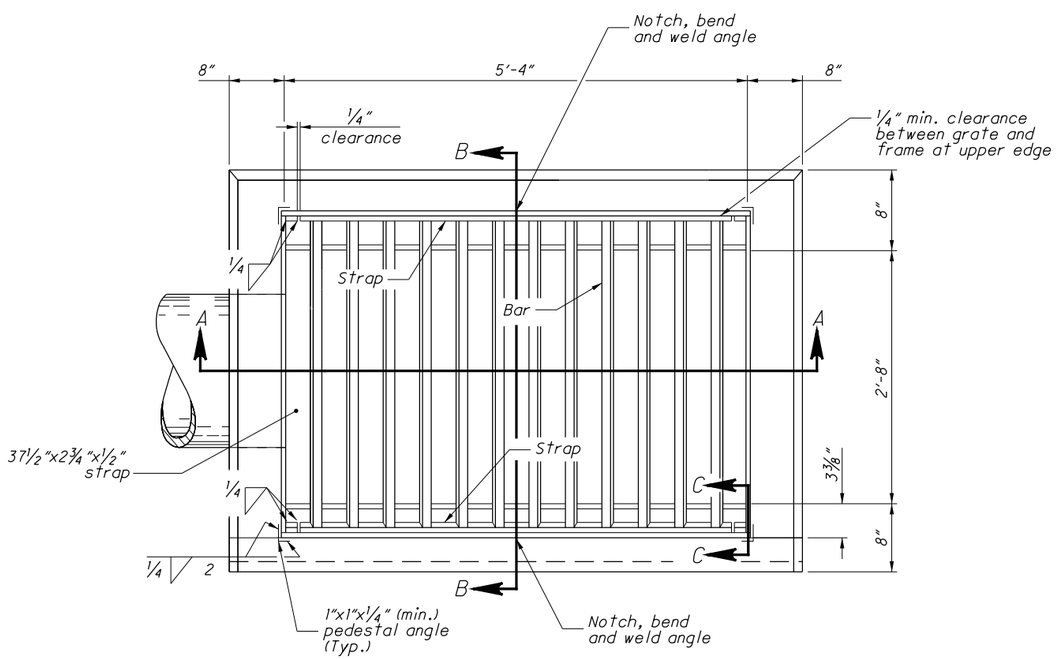

PLAN OF CATCH BASIN

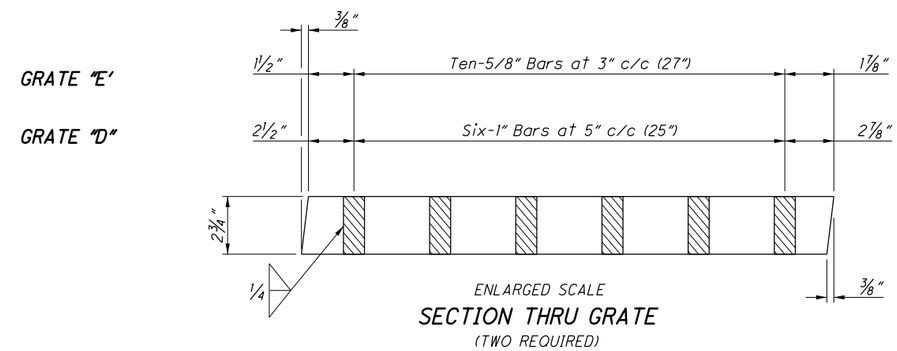

SECTION THRU GRATE
(TWO REQUIRED)

NOTE: 1"x1"x1/4" pedestal angles not shown

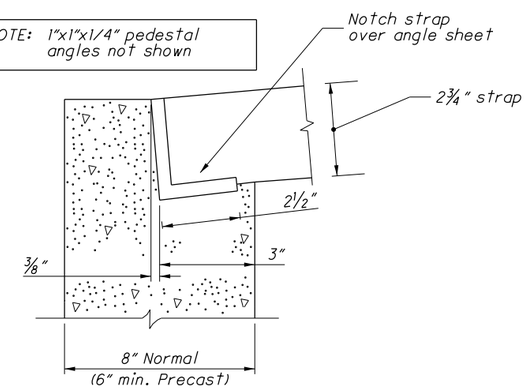

SECTION C-C

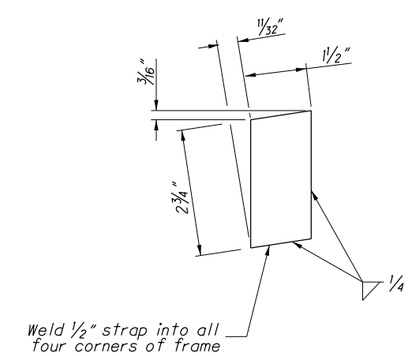

END GRATE STRAP
DETAIL "C"
(See SECTION A-A)

CATCH BASIN No. 4

STATE OF OHIO DEPARTMENT OF TRANSPORTATION
STATE HYDRAULIC ENGINEER

REVISIONS
7-20-01
7-19-02
7-15-05
7-20-12
1-18-13

ROADWAY HYDRAULIC ENGINEER
Matt Cozzoli

OFFICE OF HYDRAULIC ENGINEERING

STANDARD HYDRAULIC CONSTRUCTION DRAWING
CATCH BASIN No. 4

SCD NUMBER
CB-3.1

1 / 2

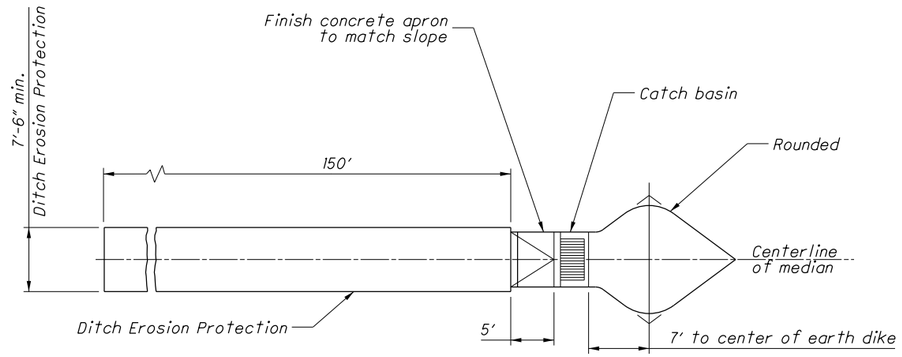

PLAN

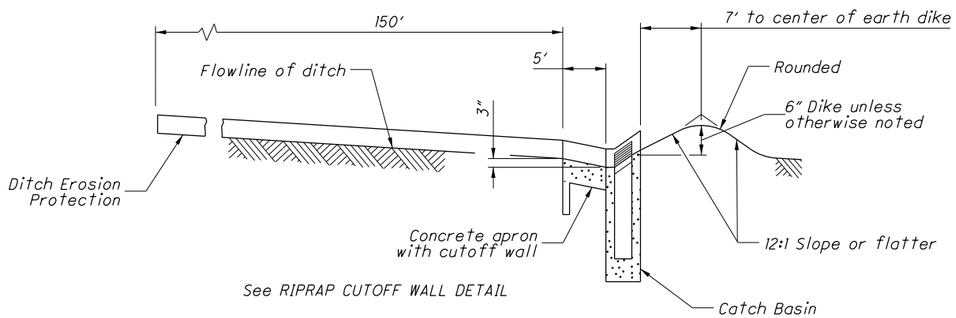

VERTICAL SCALE WALL DETAIL

PROFILE

MEDIAN GRADING AT CATCH BASIN

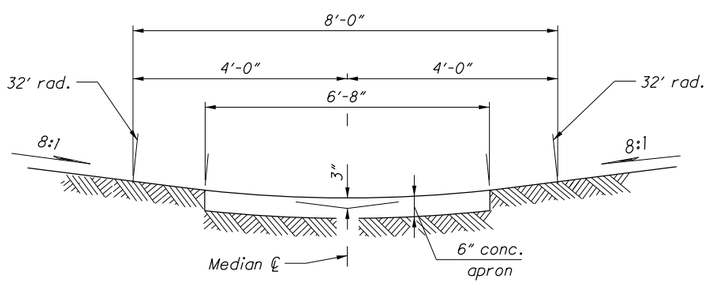

UPSTREAM END VIEW OF

CONCRETE APRON OR GROUTED RIPRAP

CONSTRUCTION INFORMATION
Typical weight of grate = 375 lbs. Typical weight of frame = 100 lbs.

NOTES

GRATE AND FRAME: Use structural steel according to CMS 711.01 and 513. Provide a design essentially the same and equally as strong as the one shown.

GRATE: Depress the grate 3" below the upstream end of the concrete apron at the centerline of the median. Furnish and install Grate "D" unless Grate "E" is specifically required by the plans.

WALLS: Construct brick or cast-in-place walls with a nominal thickness of 8" from the bottom slab to the upper box.

PRECAST CONSTRUCTION: Permitted, except for the apron. Meet the concrete requirements of CMS 706.13. Provide precast walls at least 6" thick with sufficient reinforcing to permit shipping and placement without damage. Reduce the wall thickness from the outside.

STEPS: Provide steps meeting the requirements of **SCD MH-1.1** where the depth exceeds 6'.

BASINS OVER 12 FEET DEEP: Use precast or cast-in-place concrete; reinforce with #4 bars on 12" centers both vertically and horizontally with 2" clearance from inside wall face.

LOCATION AND ELEVATION: When given on the plans, location is the center of the grate. The elevation is the lowest point on the grate.

OPENINGS: Obtain the Engineer's approval for any pipe openings greater than 4" from the outside of the pipe to the structure. Fill all voids per CMS 611.

CONCRETE APRONS: Construct aprons in such a manner that the outside edges are at equal elevations.

If specified in the plans, grouted riprap may be used in place of the concrete apron.

DITCH PROTECTION: Provide a 150' length of ditch erosion protection as shown. Installation and payment for the ditch erosion protection are per CMS 670.

BASINS IN SAG: When in a sag, omit the earth dike and longitudinal slope of the grate, and provide concrete apron and ditch protection on each side of the basin.

PAYMENT: The concrete apron with cutoff wall or grouted riprap and dike are incidental to **Item 611 - Catch Basin, No. 4.** However, the apron is not required when **Item 611 - Catch Basin, No. 4, Without Apron,** is specified.

When itemized separately, payment for Item 601 Riprap using 6" Reinforced Concrete Slab includes the cost of the cutoff wall.

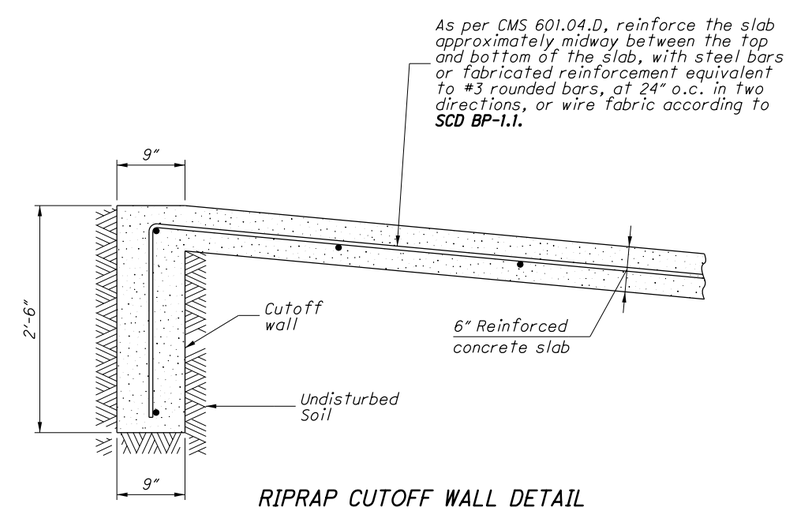

RIPRAP CUTOFF WALL DETAIL

STATE OF OHIO DEPARTMENT OF TRANSPORTATION

STATE HYDRAULIC ENGINEER

REVISIONS
7-20-01
7-19-02
7-15-05
7-20-12
1-18-13

ROADWAY HYDRAULIC ENGINEER
Matt Cozzoli

OFFICE OF HYDRAULIC ENGINEERING

STANDARD HYDRAULIC CONSTRUCTION DRAWING

CATCH BASIN No. 4

SCD NUMBER
CB-3.1

2 / 2