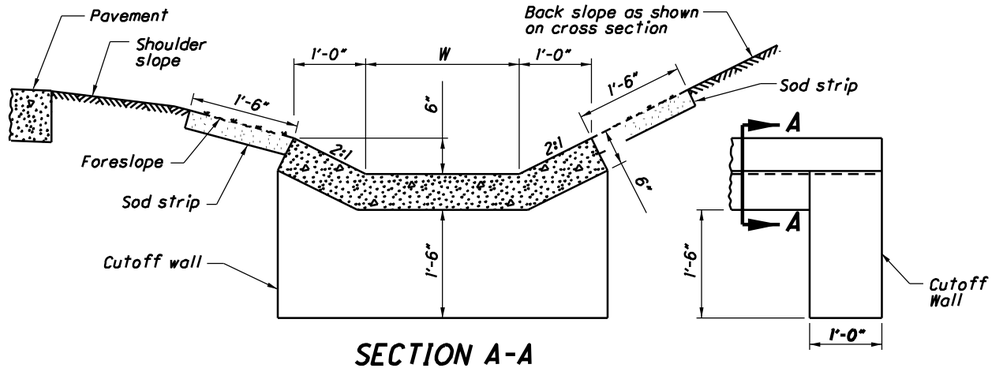

SECTION A-A

TYPE 1-2 W=2'-0"
TYPE 1-4 W=4'-0"
TYPE 1-6 W=6'-0"

SIDE VIEW

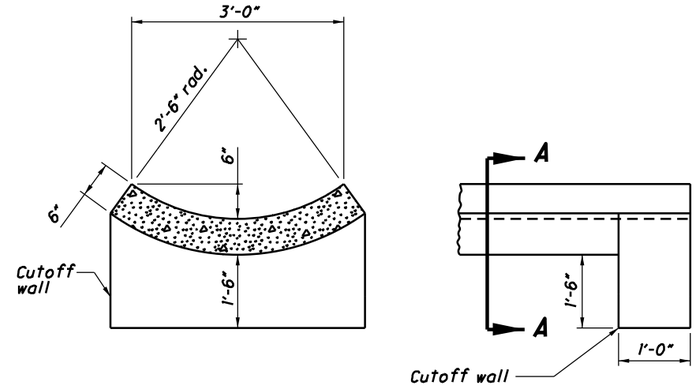

SECTION A-A

SIDE VIEW

TYPE 2

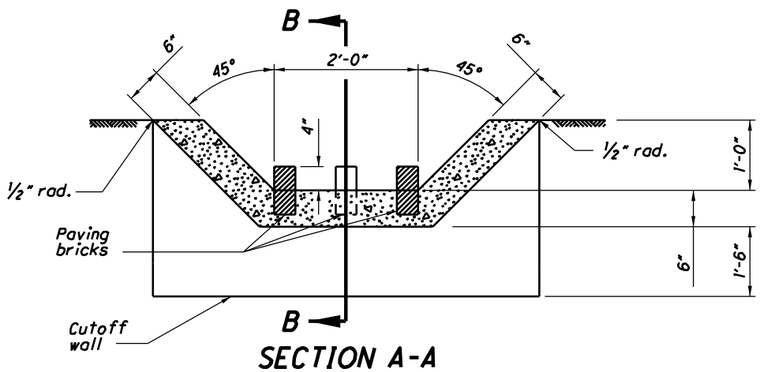

SECTION A-A

TYPE 3

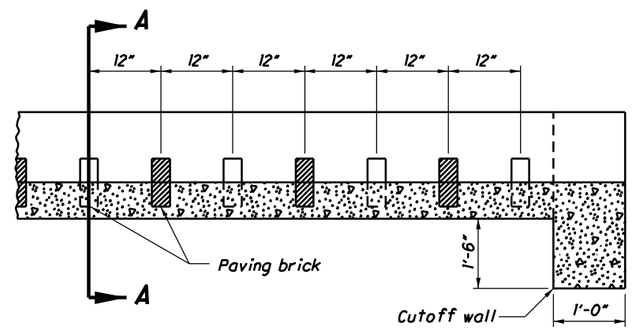

SECTION B-B

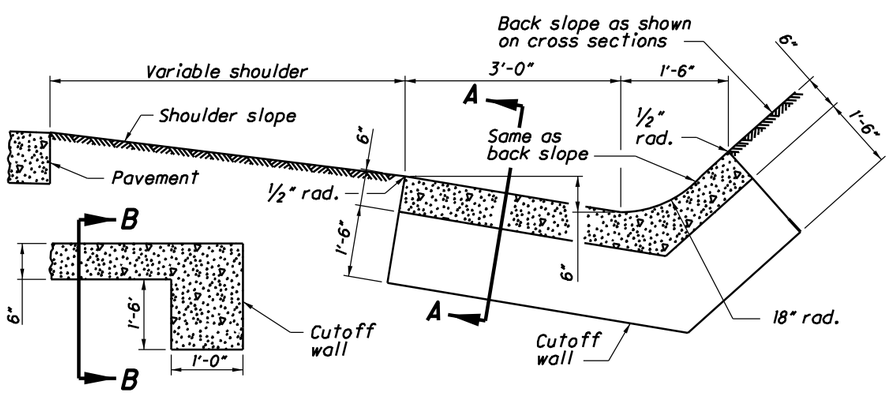

SECTION A-A

SECTION B-B

TYPE 4

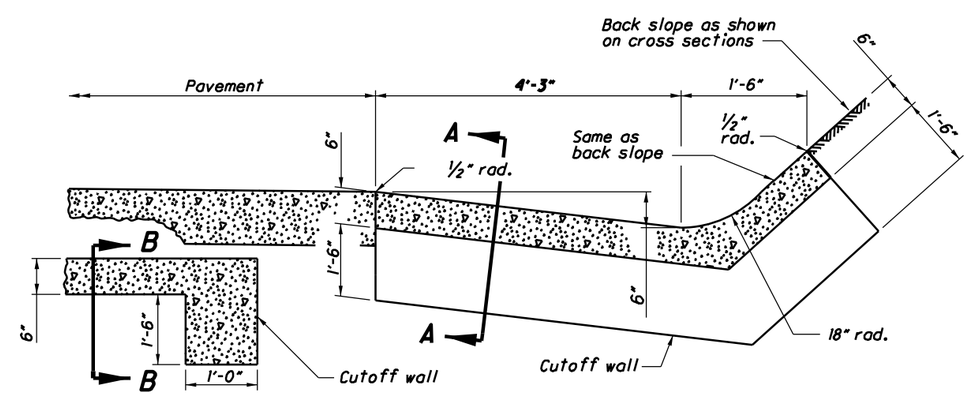

SECTION A-A

SECTION B-B

TYPE 5

STANDARD PAVED GUTTERS

NOTES

GENERAL: Construct gutters with 4000 psi compressive strength concrete, stone or brick.

The thickness of the gutter shown is for concrete construction. If stone or brick is used it must be grout-filled, and increase the gutter thickness to 8" minimum.

Type 3 Gutter with baffles may be used for steep slopes. Furnish new or used paving bricks or precast concrete blocks of similar dimension and place gutter blocks with the outside blocks in one row staggered with the center blocks at 12" on center longitudinally or as shown on plan.

CONSTRUCTION: Impress concrete gutter contraction joints and space at 10 foot intervals unless otherwise specified.

Construct concrete cutoff walls at the beginning and end of a gutter run except where the gutter connects with a catch basin or inlet.

The cost of cutoff walls is included in the unit price bid for the gutter.

SOD: Install and pay for sod according to CMS 660.

STATE OF OHIO DEPARTMENT OF TRANSPORTATION

STATE HYDRAULIC ENGINEER

REVISIONS
7-20-01
7-20-12
1-18-13

ROADWAY HYDRAULIC ENGINEER
Matt Cozzoli

OFFICE OF HYDRAULIC ENGINEERING

STANDARD HYDRAULIC CONSTRUCTION DRAWING

PAVED GUTTERS

SCD NUMBER
DM-2.1

1 / 1