STANDARD No. 2-6, 2-10, 2-14 AND 2-20 INLETS

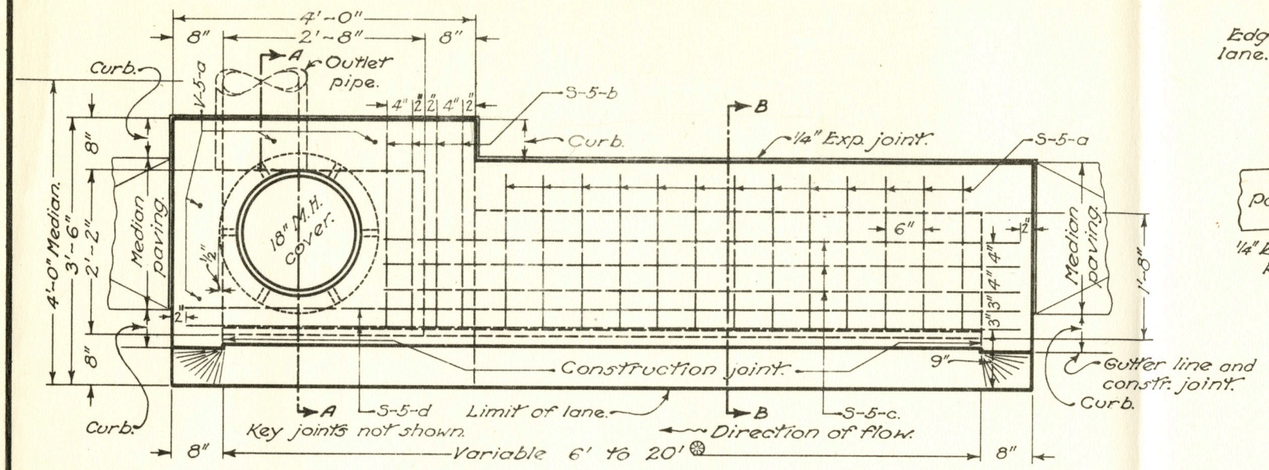

PLAN

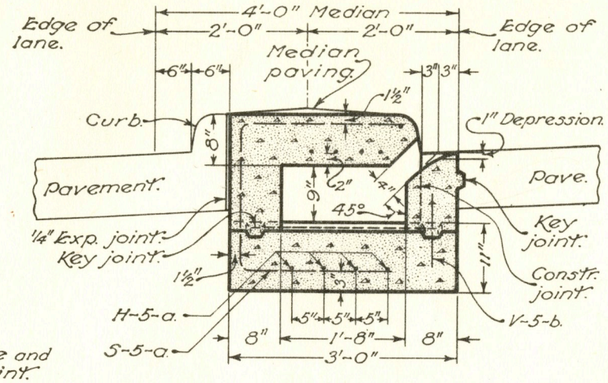

SECTION B-B

NOTES

CASTINGS shall be of cast iron in accordance with Material Details. The design shall be essentially the same and equally as strong as those shown hereon and shall be given one coat of asphaltum paint as per specifications.

Bearing areas of frame and cover shall be so fitted and finished as to provide a firm and even seat for the entire cover in the frame. No projections shall exist on bearing areas of either casting and the cover shall seat in its frame without rocking.

Minimum weight of frame and cover 130 lbs.

REINFORCING STEEL shall be 5/8" round bars in accordance with steel details shown hereon and conforming to Item S-4 of the Construction Materials Specifications. Cost of furnishing and placing reinforcing steel shall be included in Item I-8 for payment.

CONCRETE shall be class "C".

QUANTITIES of curb, pavement and median pavement within the limits of the inlet shall be deducted from the project quantities.

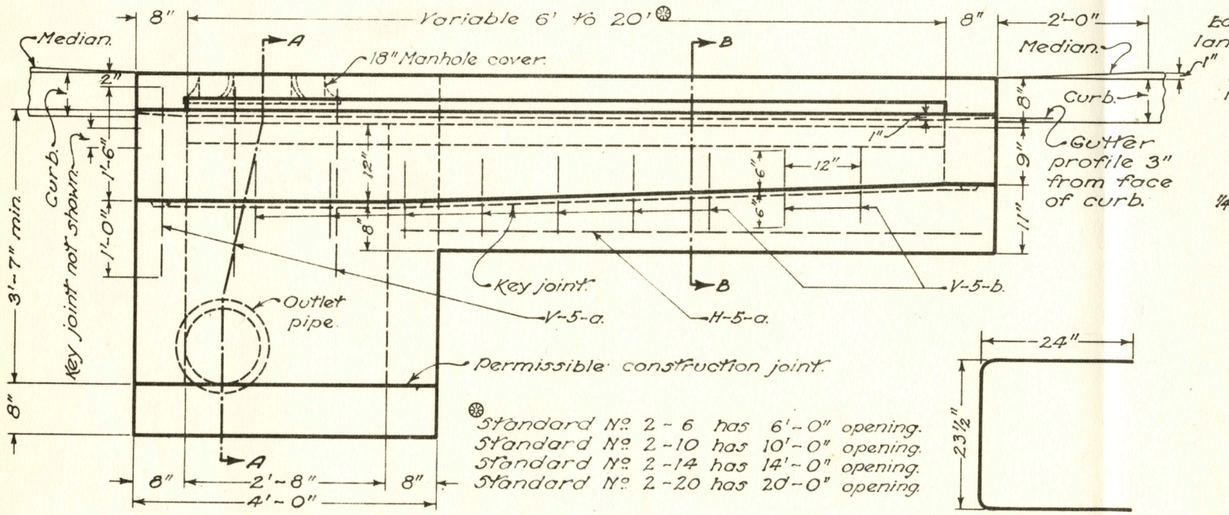

ELEVATION

S-5-a BAR

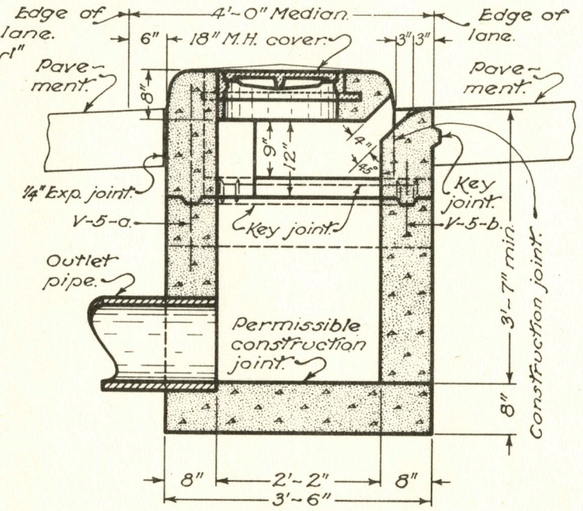

SECTION A-A

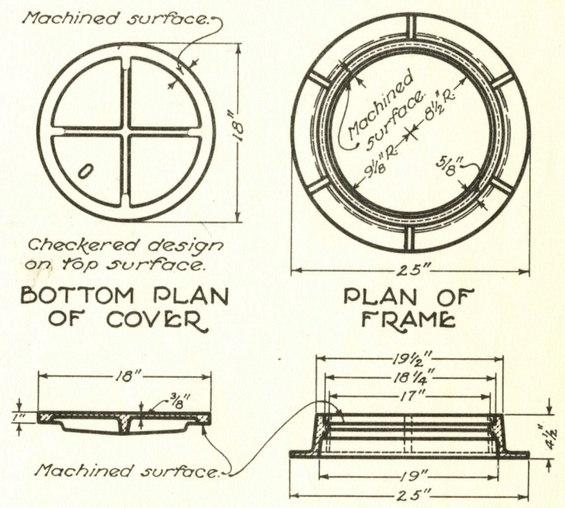

BOTTOM PLAN OF COVER

PLAN OF FRAME

COVER SECTION

FRAME SECTION

MANHOLE FRAME AND COVER

CONCRETE AND REINFORCING STEEL QUANTITIES

LENGTH FT.	CONCRETE CU. YDS.	S-5-a		S-5-b		S-5-c		S-5-d		H-5-a		V-5-a		V-5-b		WEIGHT
		NO.	LIN. FT.	NO.	LIN. FT.	NO.	LIN. FT.	NO.	LIN. FT.	NO.	LIN. FT.	NO.	LIN. FT.	NO.	LIN. FT.	LBS.
6	2.3	5	5'-11½"	4	2'-7"	3	4'-4"	2	7'-0"	4	3'-8"	4	2'-6"	5	1'-0"	101
10	3.0	13	5'-11½"	4	2'-7"	3	8'-4"	2	11'-0"	4	7'-8"	4	2'-6"	9	1'-0"	193
14	3.7	21	5'-11½"	4	2'-7"	3	12'-4"	2	15'-0"	4	11'-8"	4	2'-6"	13	1'-0"	284
20	4.9	33	5'-11½"	4	2'-7"	3	18'-4"	2	21'-0"	4	17'-8"	4	2'-6"	19	1'-0"	421

NOTE:- The above table of quantities is included with this drawing for estimating purposes only. The cost of furnishing and placing all concrete, reinforcing steel, casting, etc. shall be included in Item I-8 for payment.

BUREAU OF LOCATION AND DESIGN
OHIO DEPARTMENT OF HIGHWAYS

DATE 12-1-'54

INLETS

STANDARD CONSTRUCTION DRAWING I-8 I. No. 2

APPROVED [illegible] ENGR. L. & D.

STANDARD No. 2-6 TO 2-20 MEDIAN INLETS

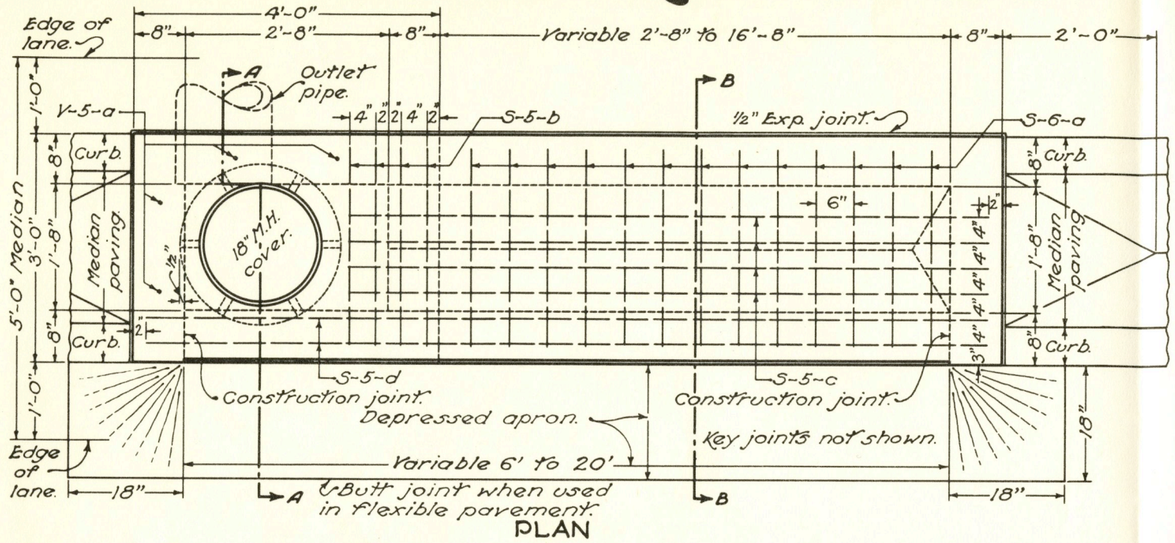

PLAN

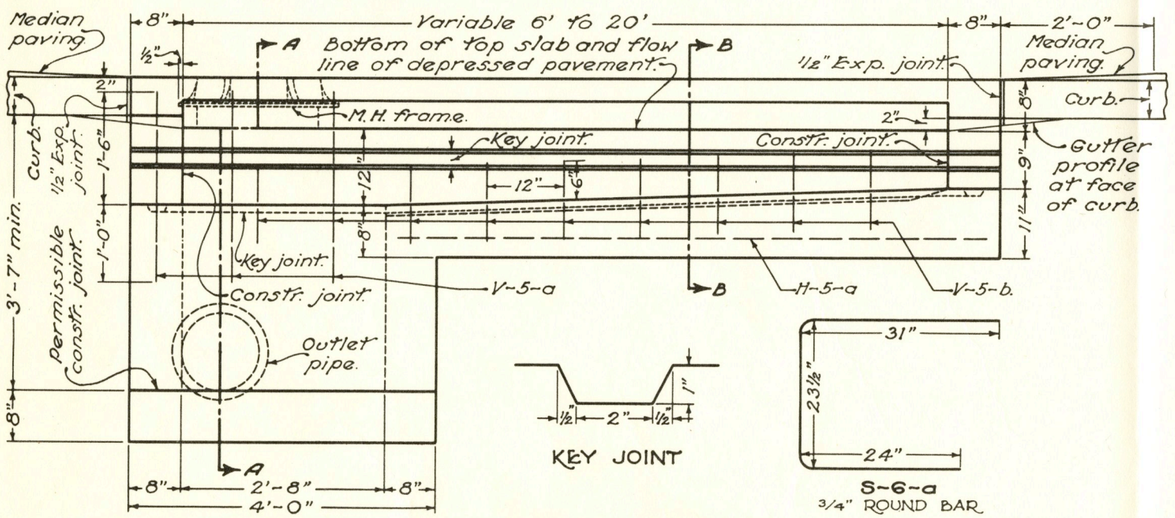

FRONT ELEVATION

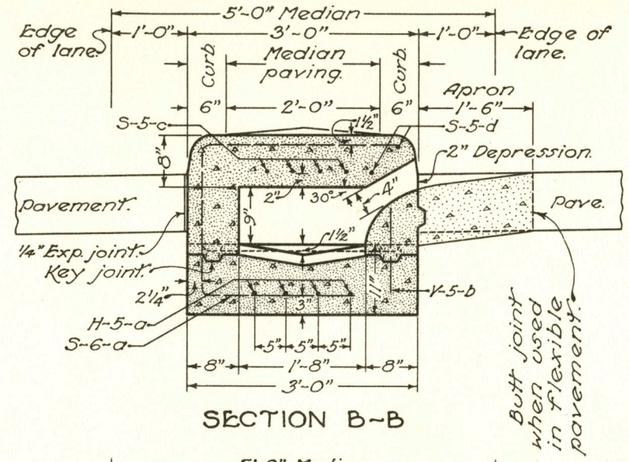

SECTION B-B

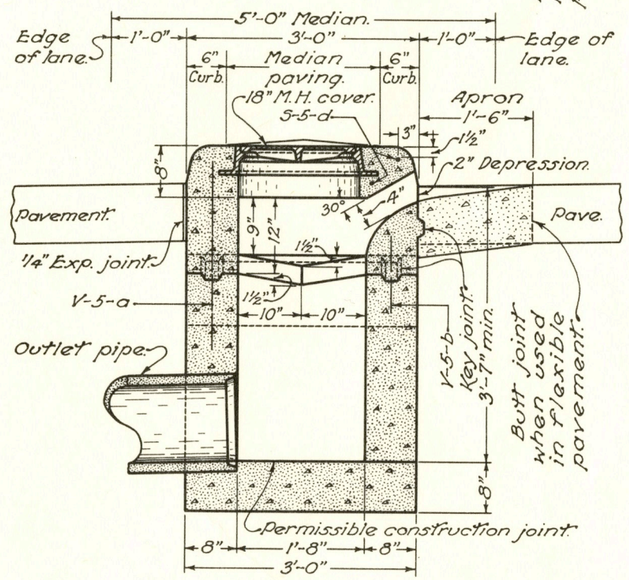

SECTION A-A

NOTES

CASTINGS shall meet the requirements of Item I-8. The design shall be essentially the same and equally as strong as those shown hereon and shall be given one coat of paint as per specifications.

Bearing areas of frame and cover shall be so fitted and finished as to provide a firm and even seat for the entire cover in the frame. No projections shall exist on bearing areas of either casting and the cover shall seat in its frame without rocking.

Minimum weight of frame and cover 130 lbs.

REINFORCING STEEL shall be round bars in accordance with steel details shown hereon and conforming to Item S-4 of the Construction Materials Specifications. Cost of furnishing and placing reinforcing steel shall be included in Item I-8 for payment.

CONCRETE cast in place to be Class "C".

END WALLS:— The sections of the end walls above the key joint may be of brick or concrete block construction.

DEPRESSED APRON:— The 18" depressed apron shall be an integral part of concrete pavements with the hand finishing required for the 2" depression being performed before the initial set. When the inlets are used with flexible pavements, the depressed apron shall be of 9" thick, class "C" concrete. Payment for all labor and material required to construct the depressed apron shall be included in the cost of the inlet. The subgrade shall be adjusted to receive the depressed apron.

QUANTITIES of curb, pavement, depressed apron and median pavement within the limits of the inlet shall be deducted from the project quantities.

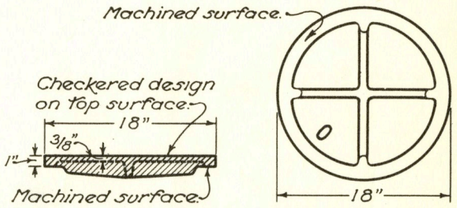

COVER SECTION — BOTTOM PLAN OF COVER

MANHOLE COVER

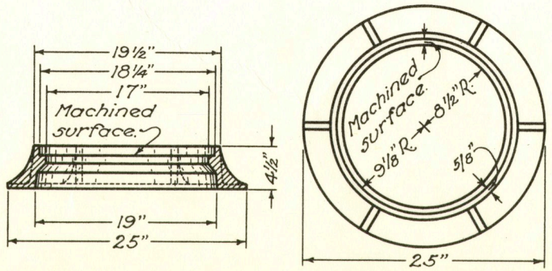

FRAME SECTION — PLAN OF FRAME

MANHOLE FRAME

CONCRETE AND REINFORCING STEEL QUANTITIES																
LENGTH FT.	CONCRETE CU. YDS.	S-6-a		S-5-b		S-5-c		S-5-d		H-5-a		V-5-a		V-5-b		WEIGHT IN LBS.
		NO.	LIN. FT.	NO.	LIN. FT.	NO.	LIN. FT.	NO.	LIN. FT.	NO.	LIN. FT.	NO.	LIN. FT.	NO.	LIN. FT.	
6	2.2	5	6'-6½"	4	2'-7"	4	4'-4"	2	7'-0"	4	3'-8"	4	2'-6"	5	1'-0"	123
8	2.6	9	6'-6½"	4	2'-7"	4	6'-4"	2	9'-0"	4	5'-8"	4	2'-6"	7	1'-0"	186
10	3.0	13	6'-6½"	4	2'-7"	4	8'-4"	2	11'-0"	4	7'-8"	4	2'-6"	9	1'-0"	248
12	3.4	17	6'-6½"	4	2'-7"	4	10'-4"	2	13'-0"	4	9'-8"	4	2'-6"	11	1'-0"	310
14	3.8	21	6'-6½"	4	2'-7"	4	12'-4"	2	15'-0"	4	11'-8"	4	2'-6"	13	1'-0"	372
16	4.2	25	6'-6½"	4	2'-7"	4	14'-4"	2	17'-0"	4	13'-8"	4	2'-6"	15	1'-0"	435
18	4.6	29	6'-6½"	4	2'-7"	4	16'-4"	2	19'-0"	4	15'-8"	4	2'-6"	17	1'-0"	497
20	5.0	33	6'-6½"	4	2'-7"	4	18'-4"	2	21'-0"	4	17'-8"	4	2'-6"	19	1'-0"	559

NOTE:— The above table of quantities is included with this drawing for estimating purposes only. The cost of furnishing and placing all concrete, reinforcing steel, casting, etc. shall be included in Item I-8 for payment.

BUREAU OF LOCATION AND DESIGN
OHIO DEPARTMENT OF HIGHWAYS

DATE: 12-1-'54 4-23-'59

MEDIAN INLETS

STANDARD CONSTRUCTION DRAWING — I-8 I. No. 2

APPROVED [signature] ENGR., L. & D.

STANDARD No. 2-6 TO 2-20 MEDIAN INLETS

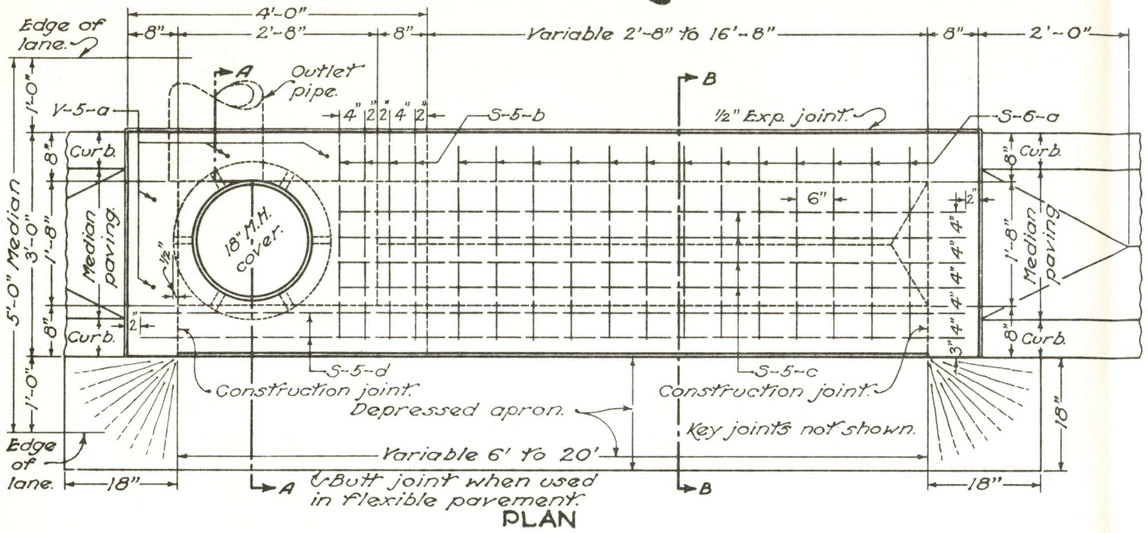

PLAN

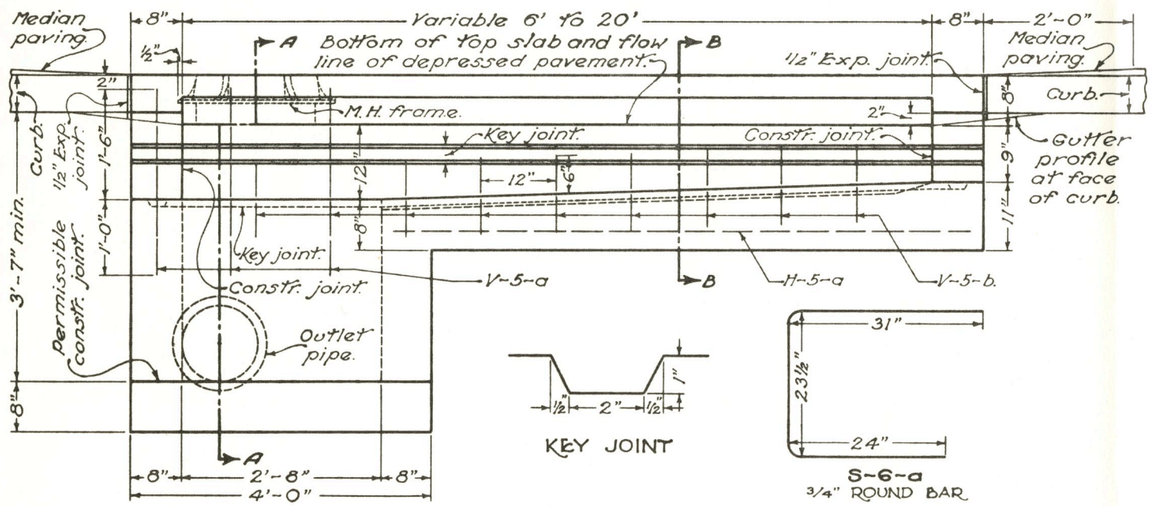

FRONT ELEVATION

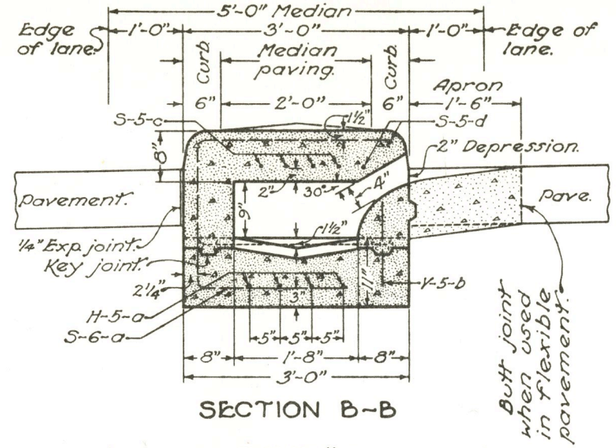

SECTION B-B

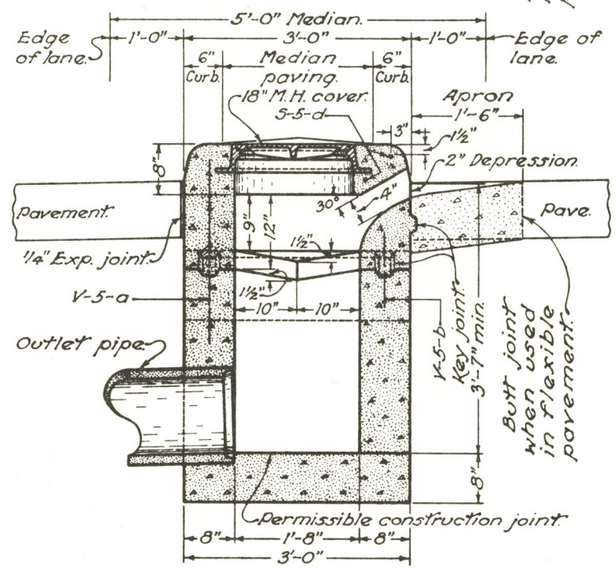

SECTION A-A

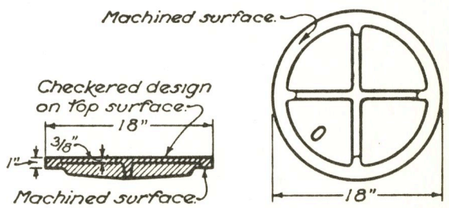

COVER SECTION

BOTTOM PLAN OF COVER

MANHOLE COVER

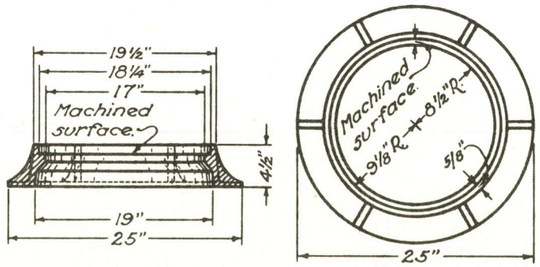

FRAME SECTION

PLAN OF FRAME

MANHOLE FRAME

NOTES

CASTINGS shall meet the requirements of Item I-8. The design shall be essentially the same and equally as strong as those shown hereon.

Bearing areas of frame and cover shall be so fitted and finished as to provide a firm and even seat for the entire cover in the frame. No projections shall exist on bearing areas of either casting and the cover shall seat in its frame without rocking.

Minimum weight of frame and cover 130 lbs.

REINFORCING STEEL shall be round bars in accordance with steel details shown hereon and conforming to Item S-4 of the Construction Materials Specifications. Cost of furnishing and placing reinforcing steel shall be included in Item I-8 for payment.

CONCRETE cast in place to be Class "C".

END WALLS:— The sections of the end walls above the key joint may be of brick or concrete block construction.

DEPRESSED APRON:— The 18" depressed apron shall be an integral part of concrete pavements with the hand finishing required for the 2" depression being performed before the initial set. When the inlets are used with flexible pavements, the depressed apron shall be of 9" thick class "C" concrete. Payment for all labor and material required to construct the depressed apron shall be included in the cost of the inlet. The subgrade shall be adjusted to receive the depressed apron.

QUANTITIES of curb, pavement, depressed apron and median pavement within the limits of the inlet shall be deducted from the project quantities.

CONCRETE AND REINFORCING STEEL QUANTITIES

LENGTH FT.	CONCRETE CU. YDS.	S-6-a		S-5-b		S-5-c		S-5-d		H-5-a		V-5-a		V-5-b		WEIGHT IN LBS.
		NO.	LIN. FT.	NO.	LIN. FT.	NO.	LIN. FT.	NO.	LIN. FT.	NO.	LIN. FT.	NO.	LIN. FT.	NO.	LIN. FT.	
6	2.2	5	6'-6½"	4	2'-7"	4	4'-4"	2	7'-0"	4	3'-8"	4	2'-6"	5	1'-0"	123
8	2.6	9	6'-6½"	4	2'-7"	4	6'-4"	2	9'-0"	4	5'-8"	4	2'-6"	7	1'-0"	186
10	3.0	13	6'-6½"	4	2'-7"	4	8'-4"	2	11'-0"	4	7'-8"	4	2'-6"	9	1'-0"	248
12	3.4	17	6'-6½"	4	2'-7"	4	10'-4"	2	13'-0"	4	9'-8"	4	2'-6"	11	1'-0"	310
14	3.8	21	6'-6½"	4	2'-7"	4	12'-4"	2	15'-0"	4	11'-8"	4	2'-6"	13	1'-0"	372
16	4.2	25	6'-6½"	4	2'-7"	4	14'-4"	2	17'-0"	4	13'-8"	4	2'-6"	15	1'-0"	435
18	4.6	29	6'-6½"	4	2'-7"	4	16'-4"	2	19'-0"	4	15'-8"	4	2'-6"	17	1'-0"	497
20	5.0	33	6'-6½"	4	2'-7"	4	18'-4"	2	21'-0"	4	17'-8"	4	2'-6"	19	1'-0"	559

NOTE:— The above table of quantities is included with this drawing for estimating purposes only. The cost of furnishing and placing all concrete, reinforcing steel, casting, etc. shall be included in Item I-8 for payment.

BUREAU OF LOCATION AND DESIGN
OHIO DEPARTMENT OF HIGHWAYS

DATE 2-1-63

MEDIAN INLETS

STANDARD CONSTRUCTION DRAWING I-8 I. No. 2

APPROVED R. H. Rider ENGR. L. & D.