STANDARD SIGN DESIGN

ODOT - OFFICE OF TRAFFIC OPERATIONS			
DATE: 07/20/12	COLORS: BLACK ON ORANGE	SERIES: WARNING	CODE NO.: W26-H3

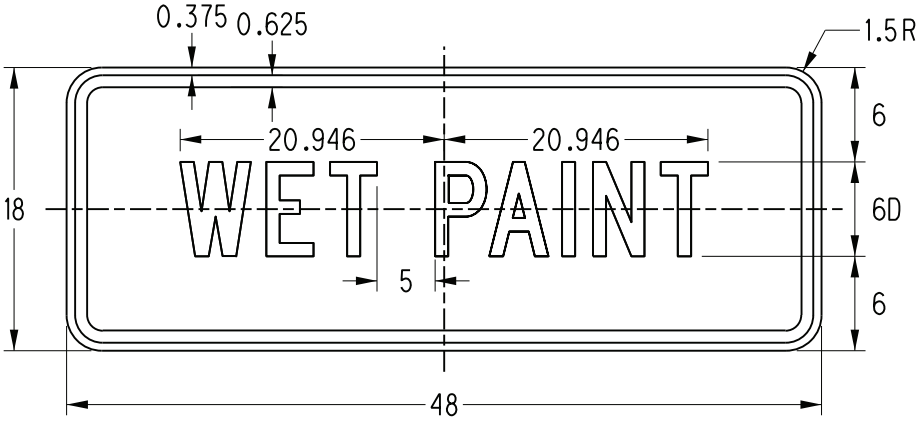

ALL DIMENSIONS SHOWN IN INCHES